# CCD-TRV3E/TRV13E/TRV23E/TRV45E/TRV55E/ TRV65E/TRV69E/TRV75/TRV75PK/TRV715

## RMT-708/717

# SERVICE MANUAL

Self Diagnostics Supported model

Photo : CCD-TRV55E
: RMT-708

Handycam Vision™
Video 8 XR
video Hi8 XR
B MECHANISM

*US Model*
*Canadian Model*
*CCD-TRV75/TRV715*

*E Model*
*CCD-TRV3E/TRV23E/TRV45E/ TRV55E/TRV75/TRV75PK*

*AEP Model*
*CCD-TRV13E/TRV65E/TRV69E*

*UK Model*
*East European Model*
*North European Model*
*Russian Model*
*CCD-TRV13E/TRV65E*

*Hong Kong Model*
*CCD-TRV3E/TRV23E/TRV45E/TRV55E*

*Tourist Model*
*CCD-TRV3E/TRV55E/TRV75*

*Australian Model*
*CCD-TRV3E/TRV23E/TRV45E*

*Chinese Model*
*CCD-TRV3E/TRV23E/TRV45E/ TRV55E/TRV65E*

**For MECHANISM ADJUSTMENTS, refer to the "8mm Video MECHANICAL ADJUSTMENT MANUAL** VII **" (9-973-801-11).**

## SPECIFICATIONS

**Video camera recorder**

**System**

Video recording system
CCD-TRV75/TRV75PK/TRV715 : 4 rotary heads (SP/LP independent heads)
CCD-TRV3E/TRV13E/TRV23E/ TRV45E/TRV55E/TRV65E/TRV69E : 2 Rotary heads
Helical scanning FM system
Audio recording system
Rotary heads, FM system
Video signal
CCD-TRV75/TRV75PK/TRV715 : NTSC color, EIA standards
CCD-TRV3E/TRV13E/TRV23E/ TRV45E/TRV55E/TRV65E/TRV69E : PAL color CCIR standards
Usable cassette
8mm video format cassette
CCD-TRV3E/TRV13E/TRV23E/ TRV45E/TRV55E : standard 8
CCD-TRV65E/69E/TRV75/TRV75PK/ TRV715 : Hi8 or standard 8
Recording / Playback time
CCD-TRV75/TRV75PK/TRV715 : (using 120 min. cassette)
SP mode: 2 hours
LP mode: 4 hours
CCD-TRV3E/TRV13E/TRV23E/ TRV45E/TRV55E/TRV65E/TRV69E : (using 90 min. cassette)
SP mode: 1 hours and 30 minutes
LP mode: 3 hours

Fastforward/rewind time
CCD-TRV75/TRV75PK/TRV715 : (using 120 min. cassette) Approx. 5 min.
CCD-TRV3E/TRV13E/TRV23E/ TRV45E/TRV55E/TRV65E/TRV69E : (using 90 min. cassette) Approx. 5 min.
Image device
CCD (Charge Coupled Device)
Viewfinder
Electronic viewfinder
Monochrome
Lens
Combined power zoom lens
Filter diameter 17/16 in. (37 mm)
CCD-TRV13E (AEP,UK) :
16 x (Optical), 32 x (Digital)
CCD-TRV13E (EE,NE,RU) :
16 x (Optical), 160 x (Digital)
CCD-TRV65E (AEP,UK)/TRV75 (US, CND)/TRV715 :
18 x (Optical), 72 x (Digital)
CCD-TRV23E/TRV45E/TRV55E/ TRV65E (EE,NE,RU,E,AUS,HK,CN)/ TRV75 (E, JE)/TRV75PK :
18 x (Optical), 220 x (Digital)
Focal distance
CCD-TRV3E/13E : 3/16 - 2 5/8 in. (4.1 - 65.6 mm)
CCD-TRV23E/TRV45E/TRV55E/ TRV65E/TRV69E/TRV75/TRV75PK/ TRV715 : 3/16 - 8 in. (4.1 - 73.8 mm)
When converted to a 35 mm still camera
CCD-TRV3E/TRV13E :
1 9/16 - 24 7/8 in. (39.4 - 630 mm)
CCD-TRV23E :
1 9/16 - 28 in. (39.4 - 709 mm)
CCD-TRV45E/TRV55E/TRV65E/ TRV69E/TRV75/TRV75PK/TRV715 :
1 7/8 - 33 1/2 in. (47.2 - 850 mm)

Color temperature
Auto
Minimum illumination*
* Minimum illumination expresses the light level a camcoder requires to produce a picture.
CCD-TRV23E : 0.4 lux (F 1.4)
CCD-TRV3E/13E : 0.4 lux (F1.4)
(*Visible minimum low light 0.2 lux)
* Visible minimum low light expresses the light level to produce a visible signal.
CCD-TRV45E/TRV55E/TRV65E/ TRV69E/TRV75/TRV75PK/TRV715 : 0.7 lux (F 1.4)
CCD-TRV23E/TRV45E/TRV55E/ TRV65E/TRV69E/TRV75/TRV75PK/ TRV715 :
0 lux (in NightShot mode)*
* Object invisible for the dark can be shot with infrared lighting.

Illumination range
CCD-TRV3E/TRV13E/TRV23E : 0.4 lux to 100,000 lux
CCD-TRV45E/TRV55E/TRV65E/ TRV69E/TRV75/TRV75PK/TRV715 : 0.7 lux to 100,000 lux
Recommended illumination
More than 100 lux

**LCD screen**

Picture
CCD-TRV3E/TRV13E/TRV23E/ TRV65E/TRV69E :
2.5 inches measured diagonally
2 x 1 1/2 in.(50.3 x 37.4 mm)
CCD-TRV45E/TRV55E :
3.5 inches measured diagonally
2 7/8 x 2 in.(72.4 x 50.4 mm)

**— Continued on next page —**

MICROFILM

# 8 VIDEO CAMERA RECORDER

CCD-TRV3E/TRV13E/TRV23E/TRV45E/TRV55E

# Hi8 VIDEO CAMERA RECORDER

CCD-TRV65E/TRV69E/TRV75/TRV75PK/TRV715

SONY®

CCD-TRV75/TRV75PK/TRV715 :
3 inches measured diagonally
2 3/8 x 1 3/4 in.(59.5 x 43.2 mm)
On-screen display
TN LCD/TFT active matrix method
Total dot number
CCD-TRV3E/TRV13E/TRV23E :
61,380 (279 x 220)
CCD-TRV65E/TRV69E :
84.260 (380 x 220)
CCD-TRV45E/TRV55E :
105,380 (479 x 220)
CCD-TRV75/TRV75PK/TRV715 :
89,622 (383 x 234)

**Input and output connectors**
S video input/output(CCD-TRV65E (CN)/TRV75/TRV75PK/TRV715 only)
S video output(CCD-TRV65 (AEP, UK, EE, NE, RU)/TRV69E only)
4-pin mini DIN
Luminance signal :
1 Vp-p, 75 ohms, unbalanced
CCD-TRV75/TRV75PK/TRV715 :
Chrominance signal :
0.286 Vp-p, 75 ohms, unbalanced
CCD-TRV65E (CN) :
Chrominance signal :
0.3 Vp-p, 75 ohms, unbalanced
Video input(CCD-TRV45E/TRV55E/TRV65E (CN)/TRV75/TRV75PK/TRV715 only)/output
Phono jack, 1 Vp-p, 75 ohms, unbalanced
Audio input (CCD-TRV45E/TRV55E/TRV65E (CN)/TRV75/TRV75PK/TRV715 only)/output
CCD-TRV13E/TRV13E/TRV23E :
Monaural, Phone jack, 327 mV
CCD-TRV45E/TRV55E/TRV69E/TRV75/TRV75PK/TRV715 : Phono jacks (2: stereo L and R) 327 mV, (at output impedance 47 kilohms)
impedance less than 2.2 kilohms
RFU DC OUT
Special minijack, DC 5V
Headphone jack(CCD-TRV45E/TRV55E/TRV65E/TRV69E/TRV75/TRV75PK/TRV715 only)
Stereo minijack (ø 3.5 mm)
Earphone jack(CCD-TRV3E/TRV13E/TRV23E only)
Monaural minijack (ø 3.5 mm)
LANC control jack
Stereo mini-minijack (ø 2.5 mm)
MIC jack
Mini jack, 0.388mV low impedance with 2.5 to 3.0 V DC, output impedance 6.8 kilohms (ø 3.5 mm)
CCD-TRV3E/TRV13E/TRV23E :
Monaural type
CCD-TRV45E/TRV55E/TRV65E/TRV69E/TRV75/TRV75PK/TRV715 :
Stereo type
Speaker
Dynamic speaker
Intelligent accessory shoe(CCD-TRV45E/TRV55E/TRV65E/TRV69E/TRV75/TRV75PK/TRV715 only)
8-pin connector

**General**
Power requirements
7.2 V (battery pack)
8.4 V (AC power adaptor)
**Averege power consumption(when using the battery pack)**
During camera recording using LCD
CCD-TRV3E/TRV13E : 3.1 W
CCD-TRV23E : 3.2 W
CCD-TRV65E/TRV69E : 3.3 W
CCD-TRV45E/TRV55E : 3.5 W
CCD-TRV75/TRV75PK/TRV715 : 3.4 W
Viewfinder
CCD-TRV3E/TRV13E : 2.5 W
CCD-TRV23E/TRV75/TRV75PK/TRV715 : 2.6 W
CCD-TRV45E/TRV55E/TRV65E/TRV69E : 2.7 W
Operating temperature
32°F to 104°F(0°C to 40°C)
Storage temperature
-4°F to +140°F(-20°C to +60°C)
Dimentions (Approx.)
CCD-TRV3E/TRV13E/TRV23E/TRV65E/TRV69E :
4 1/4 x 4 1/4 x 8 1/4 in.
(107 x 107 x 209 mm)(w/h/d)
CCD-TRV45E/TRV55E/TRV75/TRV75PK/TRV715 :
4 1/2 x 4 3/8 x 8 1/2 in.
(114 x 111 x 214 mm)(w/h/d)
Mass (Approx.)
CCD-TRV3E/TRV13E/TRV23E :
1 lb 15 oz (890 g)
CCD-TRV65E/TRV69E :
1 lb 15 oz (900 g)
CCD-TRV45E/TRV55E :
2 lb 1 oz (950 g)
CCD-TRV75/TRV75PK/TRV715 :
2 lb 1oz (940 g)
excluding the battery pack, lithium battery, cassette and shoulder strap
2 lb 3 oz (1 kg)
including the battery pack NP-F330, lithium battery CR2025, cassette and shoulder strap
Microphone
CCD-TRV3E/TRV13E/TRV23E :
Monaural type
CCD-TRV45E/TRV55E/TRV65E/TRV69E/TRV75/TRV75PK/TRV715 :
Stereo type
Supplied accessories
See page 4.

**AC power adaptor**
Power requirements
100 -240 V AC, 50/60 Hz
Power consumption
23 W
Output voltage
DC OUT: 8.4 V, 1.5 A in operating mode
Operating temperature
32°F to 104°F(0°C to 40°C)
Storage temperature
-4°F to +140°F(-20°C to +60°C)
Dimentions (Approx.)
5 x 1 9/16 x 2 1/2 in. (125 x 39 x 62 mm)(w/h/d) excluding projecting parts
Mass (Approx.)
9.8 oz (280 g) excluding power cord (Main lead)

Design and specifications are subject to change without notice.

- Abbreviation
  CND : Canadian Model
  EE : East European Model
  NE : North European Model
  RU : Russian Model
  CN : Chinese Model
  HK : Hong Kong Model
  AUS : Australian Model
  JE : Tourist Model

## SAFETY CHECK-OUT

After correcting the original service problem, perform the following safety checks before releasing the set to the customer:

1. Check the area of your repair for unsoldered or poorly-soldered connections. Check the entire board surface for solder splashes and bridges.

2. Check the interboard wiring to ensure that no wires are “pinched” or contact high-wattage resistors.

3. Look for unauthorized replacement parts, particularly transistors, that were installed during a previous repair. Point them out to the customer and recommend their replacement.
4. Look for parts which, though functioning, show obvious signs of deterioration. Point them out to the customer and recommend their replacement.
5. Check the B+ voltage to see it is at the values specified.

6. Flexible Circuit board Repairing
   - Keep the temperature of the soldering iron around 270°C during repairing.
   - Do not touch the soldering iron on the same conductor of the circuit board (within 3 times).
   - Be careful not to apply force on the conductor when soldering or unsoldering.

**SAFETY-RELATED COMPONENT WARNING !!**

**COMPONENTS IDENTIFIED BY MARK ⚠ OR DOTTED LINE WITH MARK ⚠ ON THE SCHEMATIC DIAGRAMS AND IN THE PARTS LIST ARE CRITICAL TO SAFE OPERATION. REPLACE THESE COMPONENTS WITH SONY PARTS WHOSE PART NUMBERS APPEAR AS SHOWN IN THIS MANUAL OR IN SUPPLEMENTS PUBLISHED BY SONY.**

**ATTENTION AU COMPOSANT AYANT RAPPORT À LA SÉCURITÉ!!**

**LES COMPOSANTS IDENTIFIÉS PAR UNE MARQUE ⚠ SUR LES DIAGRAMMES SCHÉMATIQUES ET LA LISTE DES PIÈCES SONT CRITIQUES POUR LA SÉCURITÉ DE FONCTIONNEMENT. NE REMPLACER CES COMPOSANTS QUE PAR DES PIÈCES SONY DONT LES NUMÉROS SONT DONNÉS DANS CE MANUEL OU DANS LES SUPPLÉMENTS PUBLIÉS PAR SONY.**

## Table for difference of function

| Model | | CCD-TRV3E | CCD-TRV13E | CCD-TRV23E | CCD-TRV45E | CCD-TRV55E | CCD-TRV65E | | CCD-TRV69E | CCD-TRV75 | CCD-TRV75/TRV75PK | CCD-TRV715 | Remark |
|---|---|---|---|---|---|---|---|---|---|---|---|---|---|
| Destination | | E,AUS,HK,CN,JE | AEP,UK,EE NE,RU | E,HK,AUS,CN | E,HK,AUS,CN | E,HK,CN,JE | AEP,UK,EE,NE,RU | CN | AEP | US,CND | E,JE/E | US,CND | |
| Classification | | TYPE A | | | TYPE B | TYPE C | TYPE D | | TYPE E | TYPE F | | | |
| Color System | | PAL | PAL | PAL | PAL | PAL | PAL | PAL | PAL | NTSC | NTSC | NTSC | |
| Remote commander | | ✕ | ✕ | RMT-708 | RMT-708 | RMT-708 | RMT-708 | RMT-708 | RMT-717 | RMT-708 | RMT-708 | RMT-708 | |
| Hi8 | | ✕ | ✕ | ✕ | ✕ | ✕ | O | O | O | O | O | O | |
| Standard 8 | | O | O | O | O | O | ✕ | ✕ | ✕ | ✕ | ✕ | ✕ | |
| Lens | Optical | 16X | 16X | 18X | 18X | 18X | 18X | 18X | 18X | 18X | 18X | 18X | 16X : LSV601A, 18X : LSV600A |
| | Digital | 100X | 32X (Note 1) | 220X | 220X | 220X | 72X(Note 2) | 220X | 72X | 72X | 220X | 72X | |
| CCD | | 510H | 510H | 510H | 760H | 760H | 760H | 760H | 760H | 760H | 760H | 760H | |
| Night shot | | ✕ | ✕ | O | O | O | O | O | O | O | O | O | O : LSV600A |
| Steady shot | | ✕ | ✕ | ✕ | O | O | O | O | O | O | O | O | O : with SE-66/67 board SE451,452,IC451 |
| 5heads/3heads | | 3heads | 3heads | 3heads | 3heads | 3heads | 3heads | 3heads | 3heads | 5heads | 5heads | 5heads | |
| Audio System | | Mono | Mono | Mono | Stereo | Stereo | Stereo | Stereo | Stereo | Stereo | Stereo | Stereo | |
| TBC&DNR | | ✕ | ✕ | ✕ | ✕ | O | O | O | O | O | O | O | O : with VC-195 board IC204 |
| VTR REC | | ✕ | ✕ | ✕ | O | O | ✕ | O | ✕ | O | O | O | O : with FK-8500 block S005,007 |
| Laser Link | | ✕ | ✕ | ✕ | ✕ | ✕ | ✕ | ✕ | ✕ | O | O | O | O : with VC-195 board IC751 |
| Photo mode | | ✕ | ✕ | ✕ | ✕ | O | ✕ | ✕ | ✕ | ✕ | ✕ | ✕ | O : VC-195 board IC204 is CXD3131 |
| Digital effect | | ✕ | ✕ | O | ✕ | O | ✕ | ✕ | ✕ | ✕ | ✕ | ✕ | O : VC-195 board IC204 is CXD3131 |
| LCD | | 2.5 inch | 2.5 inch | 2.5 inch | 3.5 inch | 3.5 inch | 2.5 inch | 2.5 inch | 2.5 inch | 3 inch | 3 inch | 3 inch | 2.5 inch : PD-92 board, 3/3.5 inch : PD-93 board |
| Monitor IN | | ✕ | ✕ | ✕ | O | O | O | O | O | O | O | O | O : with VC-195 board X151 |
| Intelligent Accessory Shoe | | ✕ | ✕ | ✕ | O | O | O | O | O | O | O | O | O : with VC-195 board CN909 |
| Normal Accessory Shoe | | ✕ | ✕ | O | ✕ | ✕ | ✕ | ✕ | ✕ | ✕ | ✕ | ✕ | |
| Time code | | ✕ | ✕ | ✕ | ✕ | ✕ | ✕ | ✕ | O | ✕ | ✕ | ✕ | O : with VC-195 board IC701 |
| Display window indicator backlight | | ✕ | ✕ | ✕ | O | O | O | O | O | O | O | O | O : with CF-50/51 board Q003,005 |
| Manual Focus | | ✕ | ✕ | O | O | O | O | O | O | O | O | O | O : with MF-8500/MR-8500 |

**Note1** : EE,NE,RU model is 160X
**Note2** : EE,NE,RU model is 220X

- Abbreviation
  CND : Canadian Model
  EE : East European Model
  NE : North European Model
  RU : Russian Model
  HK : Hong Kong Model
  AUS : Australian Model
  JE : Tourist Model
  CN : Chinese Model

**Supplied accessories**

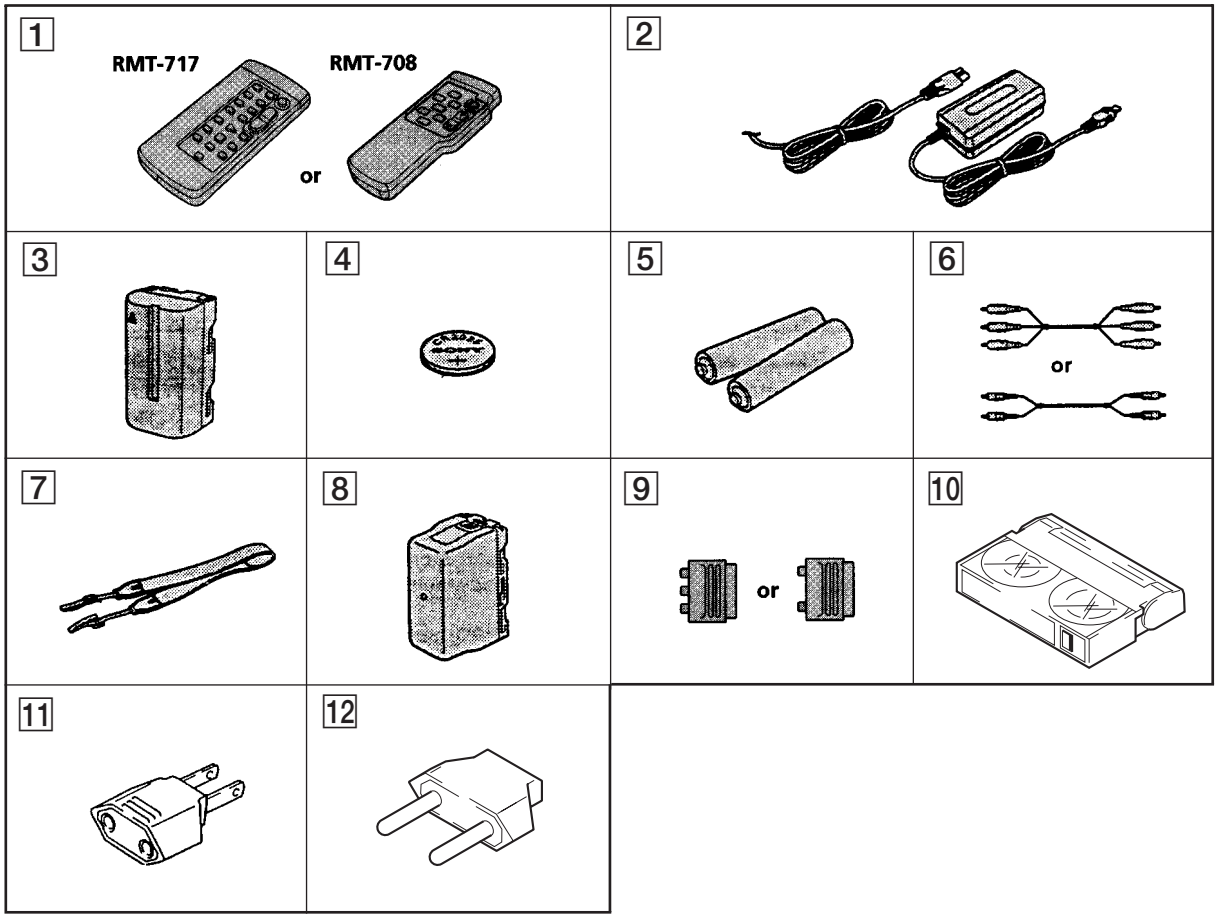


1 **Wireless Remote Commander (1)**
RMT-717 : CCD-TRV69E
RMT-708 : Except CCD-TRV69E

2 **AC-L10A/L10B/L10C AC power adaptor**

3 **NP-F330 Battery pack (1)**

4 **CR2025 Lithium Battery (1)**
The lithium battery is already installed in your camcorder.

5 **Size AA (R6) battery for Remote Commander (2)**

6 **A / V connecting cable (1)**
Stereo : Except CCD-TRV3E/TRV13E/TRV23E
Monaural : CCD-TRV3E/TRV13E/TRV23E

7 **Shoulder strap (1)**

8 **Battery case (1)**
CCD-TRV75 : US, CND

9 **21 pin adaptor (1)**
VMC-91 : CCD-TRV65E : AEP, EE, NE, RU, UK/TRV69E
VMC-89 : CCD-TRV13E

10 **8mm tape**
CCD-TRV75 : US/TRV715 : US

11 **2 pin conversion adaptor (1)**
CCD-TRV3E : E, HK/TRV23E : E, HK/TRV45E : E, HK/TRV55E : E, HK/TRV75 : E/TRV75PK

12 **2 pin conversion adaptor (1)**
CCD-TRV3E : JE/TRV55E : JE/TRV75 : JE

- Abbreviation
  CND : Canadian Model
  EE : East European Model
  NE : North European Model
  RU : Russian Model
  HK : Hong Kong Model
  AUS : Australian Model
  JE : Tourist Model
  CN : Chinese Model

# SERVICE NOTE

## 1. POWER SUPPLY DURING REPAIRS

In this unit, about 10 seconds after power is supplied (8.4V) to the battery terminal using the service power cord (J-6082-223-A), the power is shut off so that the unit cannot operate.
This following three methods are available to prevent this. Take note of which to use during repairs.

**Method 1.**
Connect the servicing remote commander RM-95 (J-6082-053-B) to the LANC jack, and set the remote commander switch to the "ADJ" side.

**Method 2.**
Press the battery switch of the battery terminal using adhesive tape, etc.

**Method 3.**
Use the DC IN terminal. (Use the AC power adaptor.)

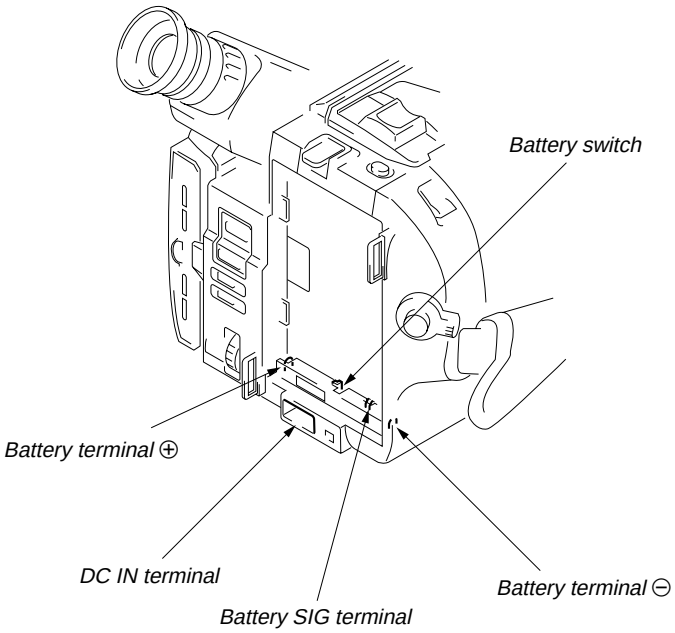


## 2. TO TAKE OUT A CASSETTE WHEN NOT EJECT (FORCE EJECT)

① Refer to 2-1-1. to remove the front panel assembly.
② Refer to 2-1-2. to remove the cabinet (R) assembly.
③ Refer to 2-1-11. to remove the battery panel assembly.
④ Refer to 2-1-13. to remove the cabinet (L) assembly.
⑤ Add +5V from the DC POWER SUPPLY and unload with a pressing the cassette lid.

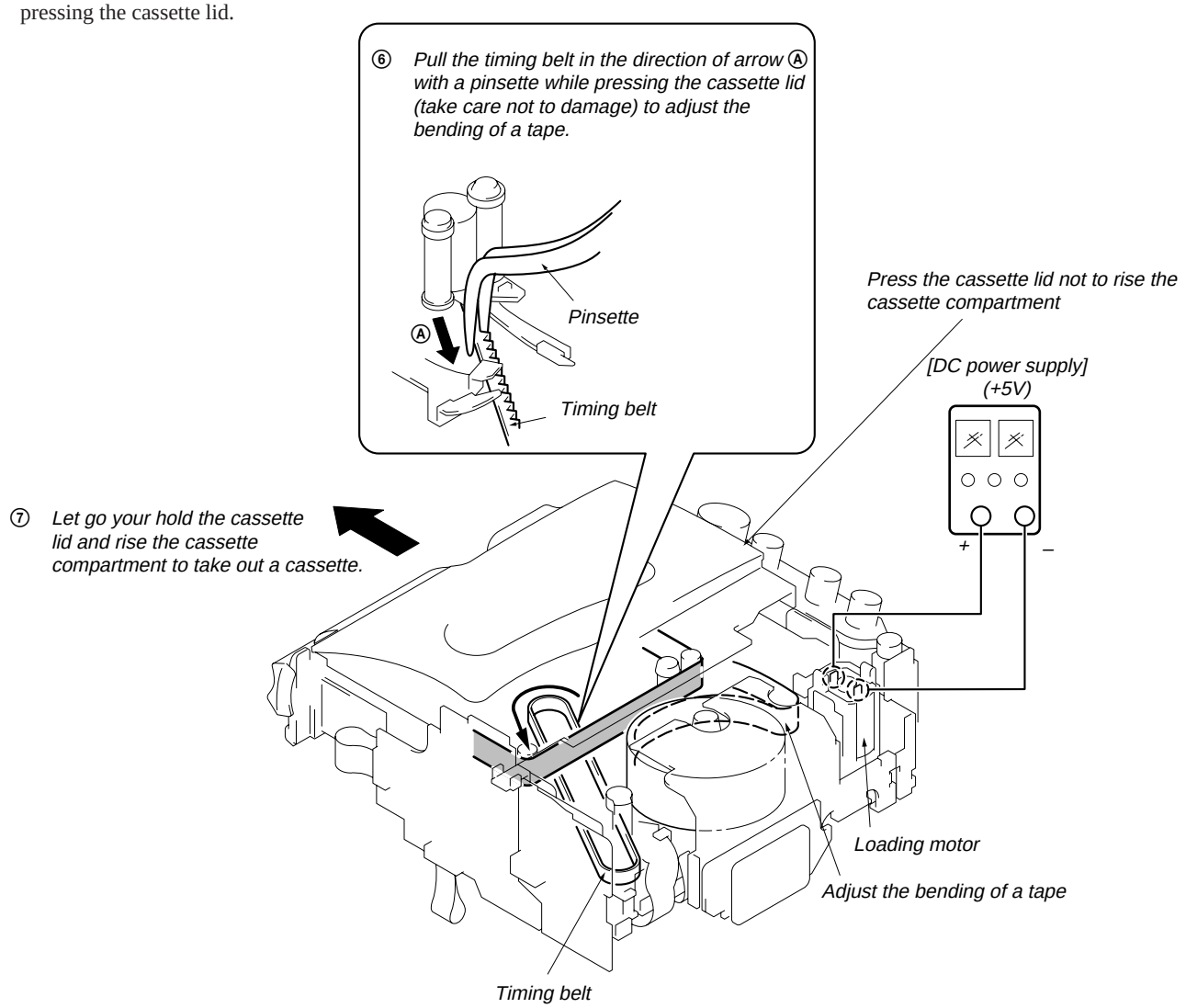
⑥ Pull the timing belt in the direction of arrow Ⓐ with a pinsette while pressing the cassette lid (take care not to damage) to adjust the bending of a tape.
Pinsette
Ⓐ
Timing belt
Press the cassette lid not to rise the cassette compartment
[DC power supply]
(+5V)
+
–
⑦ Let go your hold the cassette lid and rise the cassette compartment to take out a cassette.
Loading motor
Adjust the bending of a tape
Timing belt

# SELF-DIAGNOSIS FUNCTION

## 1. Self-diagnosis Function

When problems occur while the unit is operating, the self-diagnosis function starts working, and displays on the viewfinder or Display window what to do. This function consists of two display; self-diagnosis display and service mode display.
Details of the self-diagnosis functions are provided in the Instruction manual.

## 2. Self-diagnosis display

When problems occur while the unit is operating, the counter of the viewfinder or Display window shows a 4-digit display consisting of an alphabet and numbers, which blinks at 3.2 Hz. This 5-character display indicates the “repaired by:”, “block” in which the problem occurred, and “detailed code” of the problem.

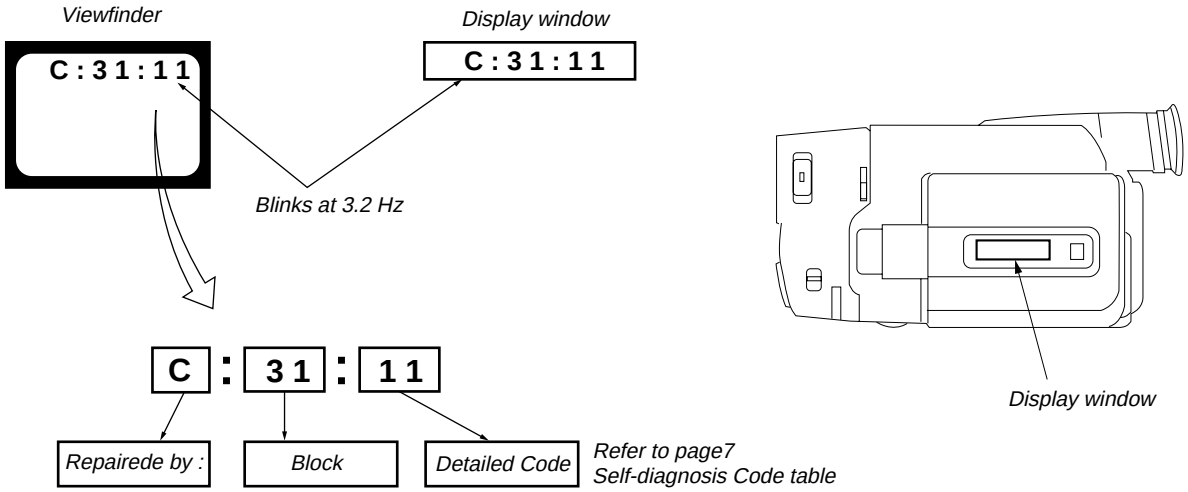


*C : Corrected by customer*
*H : Corrected by dealer*
*E : Corrected by service engineer*

*Indicates the appropriate step to be taken*
*E. g.*
*31 ... Reload the tape.*
*32 ... Turn on power again.*

## 3. Service Mode Display

The service mode display shows up to six self-diagnosis codes shown in the past.

### 3-1. Display Method

While pressing the “STOP” key, set the switch from OFF to “VTR or PLAYER”, and continue pressing the “STOP” key for 5 seconds continuously. The service mode will be displayed, and the counter will show the backup No. and the 5-character self-diagnosis codes.

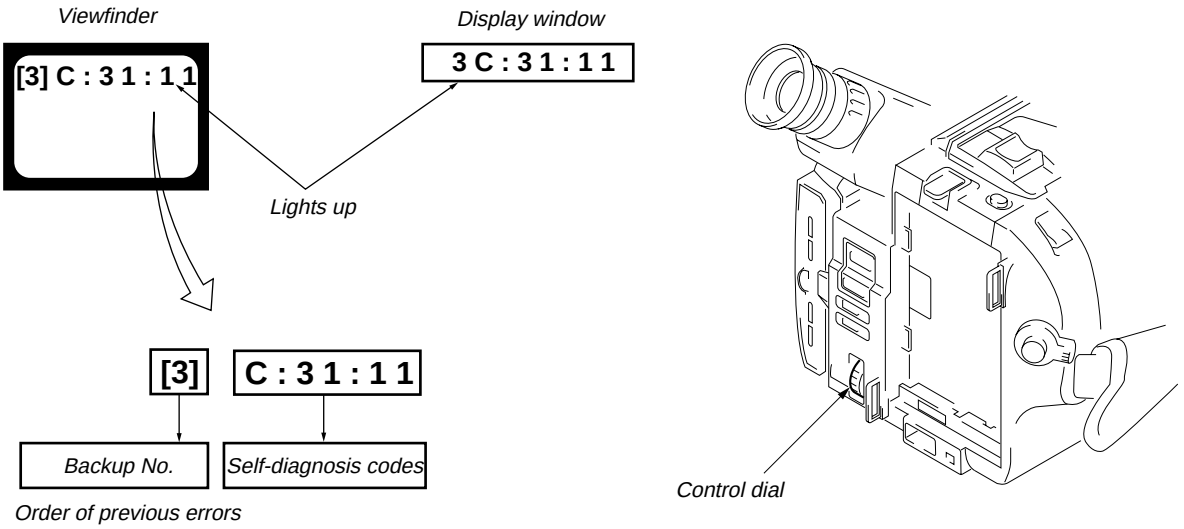


### 3-2. Switching of Backup No.

By rotating the control dial, past self-diagnosis codes will be shown in order. The backup No. in the [] indicates the order in which the problem occurred. (If the number of problems which occurred is less than 6, only the number of problems which occurred will be shown.)

[1] : Occurred first time
[2] : Occurred second time
[3] : Occurred third time
[4] : Occurred fourth time
[5] : Occurred fifth time
[6] : Occurred the last time

### 3-3. End of Display

Turning OFF the power supply will end the service mode display.

**Note:** The self-diagnosis display data will be backed up by the coin-type lithium battery. When this coin-type lithium battery is disconnected, the self-diagnosis data will be lost by initialization.

## 4. Self-diagnosis Code Table

| Self-diagnosis Code | | | | | Symptom/State | Correction |
|---|---|---|---|---|---|---|
| Repaired by: | Block Function | | Detailed Code | | | |
| C | 2 | 1 | 0 | 0 | Condensation. | Remove the cassette, and insert it again after one hour. |
| C | 2 | 2 | 0 | 0 | Video head is dirty. | Clean with the optional cleaning cassette. |
| C | 2 | 3 | 0 | 0 | Non-standard battery is used. | Use the InfoLITHIUM battery. |
| C | 3 | 1 | 1 | 0 | LOAD direction. Loading does not complete within specified time | Load the tape again, and perform operations from the beginning. |
| C | 3 | 1 | 1 | 1 | UNLOAD direction. Loading does not complete within specified time | Load the tape again, and perform operations from the beginning. |
| C | 3 | 1 | 2 | 0 | T reel side tape slacking when unloading. | Load the tape again, and perform operations from the beginning. |
| C | 3 | 1 | 2 | 1 | S reel side tape slacking when unloading. | Load the tape again, and perform operations from the beginning. |
| C | 3 | 1 | 2 | 2 | T reel fault | Load the tape again, and perform operations from the beginning. |
| C | 3 | 1 | 2 | 3 | S reel fault | Load the tape again, and perform operations from the beginning. |
| C | 3 | 1 | 3 | 0 | FG fault when starting capstan | Load the tape again, and perform operations from the beginning. |
| C | 3 | 1 | 3 | 1 | FG fault during normal capstan operations | Load the tape again, and perform operations from the beginning. |
| C | 3 | 1 | 4 | 0 | FG fault when starting drum | Load the tape again, and perform operations from the beginning. |
| C | 3 | 1 | 4 | 1 | PG fault when starting drum | Load the tape again, and perform operations from the beginning. |
| C | 3 | 1 | 4 | 2 | FG fault during normal drum operations | Load the tape again, and perform operations from the beginning. |
| C | 3 | 1 | 4 | 3 | PG fault during normal drum operations | Load the tape again, and perform operations from the beginning. |
| C | 3 | 1 | 4 | 4 | Phase fault during normal drum operations | Load the tape again, and perform operations from the beginning. |
| C | 3 | 2 | 1 | 0 | LOAD direction loading motor time-out | Remove the battery or power cable, connect, and perform operations from the beginning. |
| C | 3 | 2 | 1 | 1 | UNLOAD direction loading motor time-out | Remove the battery or power cable, connect, and perform operations from the beginning. |
| C | 3 | 2 | 2 | 0 | T reel side tape slacking when unloading. | Remove the battery or power cable, connect, and perform operations from the beginning. |
| C | 3 | 2 | 2 | 1 | S reel side tape slacking when unloading. | Remove the battery or power cable, connect, and perform operations from the beginning. |
| C | 3 | 2 | 2 | 2 | T reel fault | Remove the battery or power cable, connect, and perform operations from the beginning. |
| C | 3 | 2 | 2 | 3 | S reel fault | Remove the battery or power cable, connect, and perform operations from the beginning. |
| C | 3 | 2 | 3 | 0 | FG fault when starting capstan | Remove the battery or power cable, connect, and perform operations from the beginning. |
| C | 3 | 2 | 3 | 1 | FG fault during normal capstan operations | Remove the battery or power cable, connect, and perform operations from the beginning. |
| C | 3 | 2 | 4 | 0 | FG fault when starting drum | Remove the battery or power cable, connect, and perform operations from the beginning. |
| C | 3 | 2 | 4 | 1 | PG fault when starting drum | Remove the battery or power cable, connect, and perform operations from the beginning. |
| C | 3 | 2 | 4 | 2 | FG fault during normal drum operations | Remove the battery or power cable, connect, and perform operations from the beginning. |
| C | 3 | 2 | 4 | 3 | PG fault during normal drum operations | Remove the battery or power cable, connect, and perform operations from the beginning. |
| C | 3 | 2 | 4 | 4 | Phase fault during normal drum operations | Remove the battery or power cable, connect, and perform operations from the beginning. |
| E | 6 | 1 | 0 | 0 | Difficult to adjust focus<br>(Cannot initialize focus.) | Inspect the lens block focus reset sensor (Pin ⑲ of CN551 of VC-195 board) when focusing is performed when the focus dial is rotated in the focus manual mode and the focus motor drive circuit (IC552 of VC-195 board) when the focusing is not performed.<br>Note : Use the remote commander RM-95 only for the model without the focus dial. |
| E | 6 | 1 | 1 | 0 | Zoom operations fault<br>(Cannot initialize zoom lens.) | Inspect the lens block zoom reset sensor (Pin ㉑ of CN551 of VC-195 board) when zooming is performed when the zoom lens is operated and the zoom motor drive circuit (IC552 of VC195 board) when zooming is not performed. |
| E | 6 | 2 | 0 | 0 | Handshake correction function does not work well.(With pitch angular velocity sensor output stopped) | Inspect pitch angular velocity sensor (SE451 of SE-66/67 board) peripheral circuits. |
| E | 6 | 2 | 0 | 1 | Handshake correction function does not work well.(With yaw angular velocity sensor output stopped) | Inspect yaw angular velocity sensor (SE452 of SE-66/67 board) peripheral circuits. |

## TABLE OF CONTENTS

### SERVICE NOTE


1. Power Supply During Repairs ..... 5
2. To Take out a Cassette when not Eject (Force Eject) ..... 5


### Self-Diagnosis Function


1. Self-diagnosis function ..... 6
2. Self-diagnosis Display ..... 6
3. Service Mode Display ..... 6
   3-1. Display Method ..... 6
   3-2. Switching of Backup No. ..... 6
   3-3. End of Display ..... 6
4. Self-diagnosis Code Table ..... 7


### 1. GENERAL


Using this manual ..... 1-1
Checking supplied accessories ..... 1-1
Installing and Charging the battery pack ..... 1-1
Inserting a cassette ..... 1-2
Camera recording ..... 1-2
Hints for better Shooting ..... 1-4
Checking the recorded picture ..... 1-5
Playing back a tape ..... 1-5
Searching for the end of the picture ..... 1-6
Using alternative power sources ..... 1-6
Changing the mode settings ..... 1-7
Shooting with backlighting ..... 1-8
Using the FADER function ..... 1-8
Shooting in the dark (NightShot) ..... 1-9
Using the wide mode function ..... 1-9
Using the PROGRAM AE function ..... 1-9
Focusing manually ..... 1-10
Enjoying picture effect ..... 1-10
Adjusting the exposure ..... 1-11
Superimposing a title ..... 1-11
Making your own titles ..... 1-12
Recording with the date/time ..... 1-12
Optimizing the recording condition ..... 1-12
Releasing the STEADY SHOT function ..... 1-13
Watching on a TV screen ..... 1-13
Editing onto another tape ..... 1-13
Recording from a VCR or TV ..... 1-14
Changing the lithium battery in the camcoder ..... 1-14
Resetting the date and time ..... 1-14
Simple setting of clock by time difference ..... 1-15
Usable cassettes and playback modes ..... 1-15
Tips for using the battery pack ..... 1-15
Maintenance information and precautions ..... 1-16
Using your camcorder abroad ..... 1-17
Self-diagnosis display ..... 1-17
Identifying the parts ..... 1-18
Warning Indicators ..... 1-20


### 2. DISASSEMBLY


2-1. Removal of Front Panel Block ..... 2-1
2-2. Removal of Cabinet (R) Block ..... 2-2
2-3. Removal of EVF Block-1 ..... 2-2
2-4. Removal of LCD Block (3/3.5 inch) ..... 2-2
2-5. Removal of LCD Block (2.5 inch) ..... 2-2
2-6. Removal of CF-51 (CF-50) Board and Control Switch Block (MR-8500)/(MF-8500) ..... 2-3
2-7. Removal of EVF Block-2 ..... 2-3
2-8. Removal of Cabinet (L) Block and Battery Panel Block ..... 2-4
2-9. Removal of Cassette Lid Assembly ..... 2-4
2-10. Removal of Control Switch Block (FK-8500) ..... 2-4
2-11. Removal of Zoom Lens Block ..... 2-5
2-12. Removal of DD-105 Board and PJ-84 (PJ-83) Board ..... 2-5
2-13. Removal of VC-195 and SE-67 (SE-66) Board ..... 2-5
2-14. Service Position ..... 2-6
2-15. Circuit Board Location ..... 2-7


### 3. BLOCK DIAGRAMS


3-1. Overall Block Diagram ..... 3-1
3-2. Camera/Video 1 Block Diagram ..... 3-5
3-3. VTR/Camera Control Block Diagram ..... 3-9
3-4. Servo Block Diagram ..... 3-12
3-5. Mode Control Block Diagram ..... 3-15
3-6. Audio Block Diagram ..... 3-19
3-7. LCD (CCD-TRV23E/TRV45E/TRV55E/TRV65E/TRV69E/TRV75/TRV75PK/TRV715) Block Diagram ..... 3-23
3-8. LCD (CCD-TRV3E/TRV13E) Block Diagram ..... 3-26
3-9. B/W EVF Block Diagram ..... 3-29
3-10. Power Block Diagram ..... 3-33

## 4. PRINTED WIRING BOARDS AND SCHEMATIC DIAGRAMS


4-1. Frame Schematic Diagram (1) ..... 4-1
- Frame Schematic Diagram (2) ..... 4-4

4-2. Printed Wiring Boards and Schematic Diagrams ..... 4-7
- CD-197/198 (CCD Imager) (2.5 Inch LCD, 3 Inch/3.5 Inch LCD Model) Board ..... 4-8
- VC-195 (Camera, Y/C Processor, IN/OUT, REC/PB Head Amp, Servo/System Control, Servo, Audio, IR Transmiter, Mode Control) Board ..... 4-10
- VC-195 (Camera 1) Board ..... 4-17
- VC-195 (Camera 2) Board ..... 4-19
- VC-195 (Y/C Process) Board ..... 4-23
- VC-195 (IN/OUT) Board ..... 4-27
- VC-195 (REC/PB Head Amp) Board ..... 4-31
- VC-195 (Servo/System Control) Board ..... 4-35
- VC-195 (Servo) Board ..... 4-38
- VC-195 (Audio) Board ..... 4-41
- VC-195 (IR Transmiter) Board ..... 4-46
- VC-195 (Mode Control) Board ..... 4-49
- SE-67/66 (Steady Shot) (2.5 Inch, 3 Inch/3.5 Inch LCD Model) Board ..... 4-52
- PJ-83/84 (AV IN/OUT) (2.5 Inch, 3 Inch/3.5 Inch LCD Model) Board ..... 4-55
- MA-331 (Stereo Mic, Laser Link) (2.5 Inch LCD Model) Board ..... 4-58
- MA-312 (Stereo Mic, Laser Link) (3 Inch/3.5 Inch LCD Model) Board ..... 4-59
- CF-50 (Control (2.5 Inch LCD Model)) Board ..... 4-64
- CF-51 (Control (3 Inch/3.5 Inch LCD Model)) Board ..... 4-73
- Control Switch Block (FK-8500/SS-8500) ..... 4-77
- PD-92 (RGB Decorder, LCD Drive, Back Light LCD (2.5 Inch LCD Model)) Board ..... 4-78
- PD-92 (RGB Decorder) Board ..... 4-81
- PD-92 (LCD Drive) Board ..... 4-84
- PD-92 (Back Light) Board ..... 4-87
- PD-92 (LCD) Board ..... 4-88
- PD-93 (RGB Decorder, LCD Drive, Back Light LCD (3 Inch/3.5 Inch LCD Model)) Board ..... 4-90
- PD-93 (RGB Decorder) Board ..... 4-93
- PD-93 (LCD Drive) Board ..... 4-96
- PD-93 (Back Light) Board ..... 4-99
- PD-93 (LCD) Board ..... 4-100
- VF-99 (B/W EVF (B/W EVF Model)) Board ..... 4-103
- DD-105 (Power) Board ..... 4-108


## 5. ADJUSTMENTS


5-1. CAMERA SECTION ADJUSTMENTS ..... 5-1
1-1. Preparations before Adjustment (Camera Section) ..... 5-1
1-1-1. List of Service Tools ..... 5-1
1-1-2. Preparations ..... 5-2
1-1-3. Precautions ..... 5-5
1. Setting the Switch ..... 5-5
2. Adjusting Procedure ..... 5-5
3. Subject ..... 5-5
1-1-4. Adjusting Remote Commander ..... 5-6
1. Using the adjusting remote commander ..... 5-6
2. Precautions upon using the adjusting remote commander ..... 5-6
1-1-5. Data Processing ..... 5-7
1-2. Initialization of D, E, F Page Data ..... 5-8
1. Initialization of D, E, F Page Data ..... 5-8
2. Modification of D, E, F Page Data ..... 5-8
3. D Page Table ..... 5-9
4. F Page Table ..... 5-10
5. E Page Table ..... 5-12
1-3. Camera System Adjustments ..... 5-14
1. G-CAM flip Adjustment ..... 5-14
2. Hall Adjustment ..... 5-15
3. Flange Back Adjustment ..... 5-16
3-1. Flange Back Adjustment (1) ..... 5-16
3-2. Flange Back Adjustment (2) ..... 5-16
4. Flange Back Check ..... 5-17
5. Picture Frame Setting ..... 5-17
6. Color Reproduction Adjustment ..... 5-18
7. IRIS IN/OUT Adjustment ..... 5-19
8. MAX GAIN Adjustment ..... 5-19
9. Auto White Balance Standard Data Input ..... 5-20
10. Auto White Balance Adjustment ..... 5-20
11. White Balance Check ..... 5-21
12. Angular Velocity Sensor Sensitivity Adjustment (CCD-TRV45E/TRV55E/TRV65E/TRV69E/TRV75/TRV75PK/TRV715) ..... 5-22
1-4. Monochrome Electronic Viewfinder System Adjustments ..... 5-23
1-4-1. Horizontal Slant Check ..... 5-23
1-4-2. Centering Adjustment ..... 5-23
1-4-3. Focus Adjustment ..... 5-23
1-4-4. Aberration Adjustment ..... 5-24
1-4-5. Horizontal Amplitude Adjustment (VF-99 board) ..... 5-24
1-4-6. Vertical Amplitude Adjustment (VF-99 board) ..... 5-25
1-4-7. Brightness Adjustments (VF-99 board) ..... 5-25
1-4-8. Horizontal Amplitude, Vertical Amplitude, Focus Check ..... 5-25
1-5. LCD System Adjustment ..... 5-26
1. LCD initial data input ..... 5-26
2. VCO adjustment (PD-92/93 board) ..... 5-27
3. D range adjustment (PD-92/93 board) ..... 5-27
4. Bright adjustment (PD-92/93 board) ..... 5-28
5. Contrast adjustment (PD-92/93 board) ..... 5-28
6. V-COM level adjustment (PD-92/93 board) ..... 5-29
7. Color adjustment (PD-92/93 board) ..... 5-29
8. V-COM adjustment (PD-92/93 board) ..... 5-30
9. White balance adjustment (PD-92/93 board) ..... 5-30

5-2. MECHANICAL SECTION ADJUSTMENT ..... 5-31
2-1. Operating without a Cassette ..... 5-31
2-2. Tape path Adjustment ..... 5-31
1. Preparations for adjustments ..... 5-31

5-3. VIDEO SECTION ADJUSTMENTS ..... 5-32
3-1. Preparations before Adjustment ..... 5-32
3-1-1. Equipments to be Used ..... 5-32
3-1-2. Precautions on Adjusting ..... 5-33
3-1-3. Adjusting Connectors ..... 5-33
3-1-4. Connecting the Equipments ..... 5-34
3-1-5. Alignment Tape ..... 5-34
3-1-6. Input/Output Level and Impedance ..... 5-36
3-1-7. Recording Mode (Standard 8/Hi8) switching (Hi8 model) ..... 5-36
3-1-8. Service Mode ..... 5-36
1. Test mode setting ..... 5-36
2. Emergency memory address ..... 5-37
2-1. EMG CODE (Emergency Code) ..... 5-37
2-2. MSW Codes ..... 5-38
3. Bit value discrimination ..... 5-39
4. Switch check (1) ..... 5-39
5. Switch check (2) ..... 5-40
6. Headphone jack check ..... 5-40
7. Input/output selection check ..... 5-40
8. LED, LCD (display window) check ..... 5-41
9. Record of use check ..... 5-41
3-2. System Control System Adjustment ..... 5-42
1. Initialization of D, E, F Page Data ..... 5-42
2. Battery End Adjustment (VC-195 board) ..... 5-42
3-3. Servo System Adjustments ..... 5-43
1. CAP FG Offset Adjustment (VC-195 board) ..... 5-43
2. Switching Position Adjustment (VC-195 board) ..... 5-43
3. NTSC LP Mode Switching Position Adjustment (VC-195 board) (CCD-TRV75/TRV75PK/TRV715) ..... 5-44
3-4. Video System Adjustments ..... 5-44
1. 28 MHz Origin Oscillation Adjustment (VC-195 board) ..... 5-44
2. AFC f0 Adjustment (VC-195 board) ..... 5-45
3. Filter f0 Adjustment (VC-195 board) ..... 5-45
4. Y OUT Level Adjustment (VC-195 board) ..... 5-46
5. C OUT Level Adjustment (VC-195 board) ..... 5-46
6. RP Filter f0 Adjustment (VC-195 board) ..... 5-47
7. Hi8 REC Y Current Adjustment (VC-195 board) (CCD-TRV65E/TRV69E/TRV75/TRV75PK/TRV715) ..... 5-48
8. Standerd8 REC Y Current Adjustment (VC-195 board) (CCD-TRV3E/TRV13E/TRV23E/TRV45E/TRV55E) ..... 5-49
9. Hi8 REC L Level Adjustment (VC-195 board) (CCD-TRV65E/TRV69E/TRV75/TRV75PK/TRV715) ..... 5-50
10. Standerd8 REC L Level Adjustment (VC-195 board) (CCD-TRV3E/TRV13E/TRV23E/TRV45E/TRV55E) ..... 5-51
11. REC C Current Adjustment (VC-195 board) ..... 5-52
3-5. IR Transmitter Adjustments (CCD-TRV75/TRV75PK/TRV715) ..... 5-53
1. IR Video Carrier Frequency Adjustment (VC-195 board) ..... 5-53
2. IR Video Deviation Adjustment (VC-195 board) ..... 5-53
3. IR Audio Deviation Adjustment (VC-195 board) ..... 5-54
3-6. Stereo Audio System Adjustment (CCD-TRV45E/TRV55E/TRV65E/TRV69E/TRV75/TRV75PK/TRV715) ..... 5-55
1. 1.5 MHz Deviation Adjustment (VC-195 board) ..... 5-57
2. 1.7 MHz Deviation Adjustment (VC-195 board) ..... 5-57
3. BPF f0 Adjustment (VC-195 board) ..... 5-58
3-7. Monaural Audio System Adjustment (CCD-TRV3E/TRV13E/TRV23E) ..... 5-58
1. 1.5 MHz Deviation Adjustment (VC-195 board) ..... 5-59
2. BPF Adjustment (VC-195 board) ..... 5-59
3-8. Arrangement Diagram for Adjustment Parts ..... 5-60

## 6. REPAIR PARTS LIST

6-1. Exploded Views ..... 6-1
6-1-1. Cabinet (L) Block Assembly ..... 6-1
6-1-2. Front Panel Block Assembly ..... 6-2
6-1-3. Cabinet (R) Block Assembly (TRV45E/TRV55E/TRV75/TRV75PK/TRV715) ..... 6-3
6-1-4. Cabinet (R) Block Assembly (TRV3E/TRV13E/TRV23E/TRV65E/TRV69E) ..... 6-4
6-1-5. LCD Block Assembly (3/3.5 Inch) (TRV45E/TRV55E/TRV75/TRV75PK/TRV715) ..... 6-5
6-1-6. LCD Block Assembly (2.5 Inch) (TRV3E/TRV13E/TRV23E/TRV65E/TRV69E) ..... 6-6
6-1-7. EVF Block Assembly (B/W EVF) ..... 6-7
6-1-8. Main Boards Assembly ..... 6-8
6-1-9. Battery Panel and CCD Block Assembly ..... 6-9
6-1-10. Device Lens (LSV-600A/LSV-601A) ..... 6-10
6-1-11. Cassette Compartment Assembly ..... 6-11
6-1-12. LS Chassis Assembly ..... 6-12
6-1-13. Mechanism Chassis Assembly ..... 6-13
6-2. Electrical Parts List ..... 6-14

# SECTION 1
# GENERAL

This section is extracted from instruction manual of CCD-TRV45E/TRV55E.



## Using this manual

The instructions in this manual are for the two models listed below. Before you start reading this manual and operating the unit, check your model number by looking at the bottom of your camcorder. The CCD-TRV55E is the model used for illustration purposes. Otherwise, the model name is indicated in the illustrations. Any differences in operation are clearly indicated in the text, for example, "CCD-TRV55E only."
As you read through this manual, buttons and settings on the camcorder are shown in capital letters.
e.g. Set the POWER switch to CAMERA.
You can hear the beep sound to confirm your operation.

### Types of differences

| CCD- | TRV45E | TRV55E |
|---|---|---|
| Photo mode | — | ● |
| Digital effect functions | — | ● |
| Fader function | ● | ● |
| Overlap | — | ● |
| Wipe | — | ● |
| Stripe | — | ● |

## Использование данного руководства

Инструкции в данном руководстве изложены для двух нижеперечисленных моделей. Перед тем, как Вы начнете читать данное руководство и эксплуатировать аппарат, проверьте номер Вашей модели, посмотрев на нижнюю панель Вашей видеокамеры. Модель CCD-TRV55E используется в иллюстративных целях. В противном случае наименование модели указывается на рисунках. Любые различия в работе четко указаны в тексте, как например, "Только CCD-TRV55E".
Когда Вы будете читать данное руководство, учитывайте, что кнопки и установки на видеокамере показаны прописными буквами. Прим.
Установите выключатель POWER в положение CAMERA.
Вы можете слушать зуммерный звуковой сигнал для подтверждения Вашей работы.

### Типы различий

| CCD- | TRV45E | TRV55E |
|---|---|---|
| Фоторежим | — | ● |
| Функции цифровых эффектов | — | ● |
| Функция введения/выведения изображения | ● | ● |
| Функция наложения | — | ● |
| Функция вытеснения шторкой | — | ● |
| Функция полосования | — | ● |

5



### Note on TV colour systems

TV colour systems differ from country to country. To view your recordings on a TV, you need a PAL system-based TV.

### Precaution on copyright

Television programmes, films, video tapes, and other materials may be copyrighted. Unauthorized recording of such materials may be contrary to the provision of the copyright laws.

### Precautions on camcorder care

- **The LCD screen and/or the colour viewfinder are manufactured using high-precision technology. However, there may be some tiny black points and/or bright points (red, blue or green in colour) that constantly appear on the LCD screen and/or in the viewfinder. These points are normal in the manufacturing process and do not affect the recorded picture in any way. Over 99.99% are operational for effective use.**
- Do not let the camcorder get wet. Keep the camcorder away from rain and sea water. Letting the camcorder get wet may cause the unit to malfunction, and sometimes this malfunction cannot be repaired **[a]**.
- Never leave the camcorder exposed to temperatures above 60°C (140°F), such as in a car parked in the sun or under direct sunlight **[b]**.

### Примечание к системам цветного телевидения

Системы цветного телевидения отличаются в зависимости от страны. Для просмотра Ваших записей по телевизору Вам необходимо использовать телевизор, основанный на системе PAL.

### Предостережение об авторском праве

Телевизионные программы, кинофильмы, видеоленты и другие материалы могут быть защищены авторским правом. Неправомочная запись таких материалов может противоречить условиям закона об авторском праве.

### Предосторожности по уходу за видеокамерой

- **Экран ЖКД и/или цветной видоискатель выполнены с применением высокопрецизионной технологии. Однако, крошечные черные точки и/или яркие точки света (красные, синие или зеленые в цвете) могут постоянно появляться на экране ЖКД и/или в видоискателе. Эти точки считаются нормальным явлением в процессе съемки и никак не влияют на записываемое изображение. Свыше 99,99% экрана предназначенно для эффективного использования.**
- Не позволяйте видеокамере делаться влажной. Предохраняйте видеокамеру от дождя или морской воды. Если Вы намочите видеокамеру, то это может вызвать неисправность аппарата, и в некоторых случаях эта неисправность не подлежит ремонту **[a]**.
- Никогда не оставляйте видеокамеру в месте с температурой свыше 60°C (140°F), как например, в автомобиле, остановленном на солнце или под прямыми солнечными лучами **[b]**.

[a]

[b]

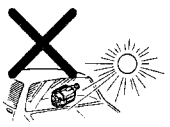

6

## Checking supplied accessories

Check that the following accessories are supplied with your camcorder.

## Проверка прилагаемых принадлежностей

Проверьте, что следующие принадлежности прилагаются к Вашей видеокамере.

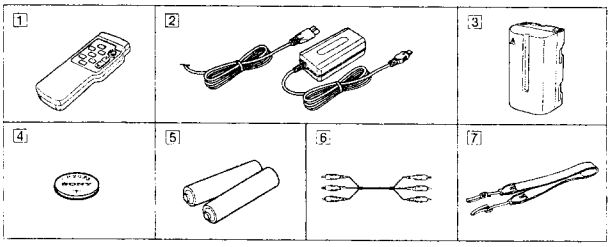

1 **Wireless Remote Commander** (1) (p. 105)

2 **AC-L10A/L10B/L10C AC power adaptor** (1), **Mains lead** (1) (p. 9, 30)

3 **NP-F330 Battery pack** (1) (p. 8, 30)

4 **CR2025 Lithium Battery** (1) (p. 73)
The lithium battery is already installed in your camcorder.

5 **R6 (size AA) battery for Remote Commander** (2) (p. 106)

6 **A/V connecting cable** (1) (p. 68)

7 **Shoulder strap** (1) (p. 107)

Contents of the recording cannot be compensated if recording or playback is not made due to a malfunction of the camcorder, video tape, etc.

1 **Беспроводный пульт дистанционного управления** (1) (стр. 105)

2 **Сетевой адаптер перем. тока AC-L10A/L10B/L10C** (1), **Сетевой провод** (1) (стр. 9, 30)

3 **Батарейный блок NP-F330** (1) (стр. 8, 30)

4 **Литиевая батарейка CR2025** (1) (стр. 73)
Литиевая батарейка уже установлена в Вашей видеокамере.

5 **Батарейка R6 (размером AA) для пульта дистанционного управления** (2) (стр.106)

6 **Соединительный кабель аудио/видео** (1) (стр. 68)

7 **Плечевой ремень** (1) (стр. 107)

Содержимое записи не может быть компенсировано, если запись или воспроизведение не выполняется вследствие повреждения видеокамеры, видеоленты и т.д.





## Installing and charging the battery pack

Before using your camcorder, you first need to install and charge the battery pack.

### Installing the battery pack

(1) While pressing BATT RELEASE, slide the battery terminal cover in the direction of the arrow.
(2) Install the battery pack in the direction of the ▼ mark on the battery pack. Slide the battery pack down until it catches on the battery release lever and clicks.
Attach the battery pack to the camcorder securely.

## Установка и зарядка батарейного блока

Перед использованием Вашей видеокамеры Вам нужно сперва зарядить и установить батарейный блок.

### Установка батарейного блока

(1) Нажимая BATT RELEASE сдвиньте крышку батарейных контактов в направлении стрелки.
(2) Установите батарейный блок в направлении знака ▼ на батарейном блоке. Двигайте батарейный блок вниз до тех пор, пока он не будет захвачен рычагом освобождения батарейного блока и не защелкнется.
Надежно присоедините батарейный блок к видеокамере.

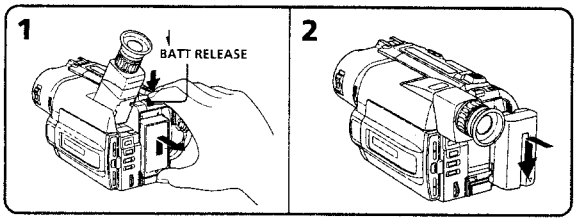


**Note on the battery pack**
Do not carry the camcorder by grasping the battery pack.

**Примечание к батарейному блоку**
Не носите видеокамеру, держа ее за батарейный блок.

7 8

## Charging the battery pack

Charge the battery pack on a flat surface without vibration. The battery pack is charged a little in the factory.

(1) Open the DC IN jack cover and connect the supplied AC power adaptor to the DC IN jack with the plug's ▲ mark up.
(2) Connect the mains lead to the AC power adaptor.
(3) Connect the mains lead to the mains.
(4) Slide the POWER switch to OFF. Remaining battery time is indicated by the minutes on the display window. Charging begins.

When the remaining battery indicator becomes **normal charge** is completed. For **full charge**, which allows you to use the battery longer than usual, leave the battery pack attached for about 1 hour after normal charge is completed until FULL appears in the display window.

Before using the camcorder with the battery pack, unplug the AC power adaptor from the DC IN jack of the camcorder. You can also use the battery pack before it is completely charged.

## Зарядка батарейного блока

Заряжайте батарейный блок на плоской поверхности, неподверженной вибрации. Батарейный блок слегка заряжен на заводе.

(1) Откройте крышку гнезда DC IN и подсоедините прилагаемый сетевой адаптер переменного тока (не прилагается) к гнезду DC IN так, чтобы метка ▲ на штекере была расположена сверху.
(2) Подсоедините сетевой провод к сетевому адаптеру переменного тока.
(3) Подсоедините сетевой провод к сети.
(4) Передвиньте выключатель POWER положение OFF. Оставшееся время заряда батарейного блока будет отображаться в минутах в окошке дисплея. Начнется зарядка.

Когда индикатор оставшегося заряда батарейного блока будет выглядеть как **нормальная зарядка** завершена. Для **полной зарядки**, которая позволяет Вам использовать батарейный блок дольше, чем обычно, оставьте батарейный блок присоединенным примерно на один час после завершения нормальной зарядки, пока в окошке дисплея не появится индикация FULL.

Перед использованием видеокамеры от батарейного блока отсоедините сетевой адаптер переменного тока от гнезда DC IN на видеокамере. Вы можете также использовать батарейный блок до того, как он полностью зарядится.

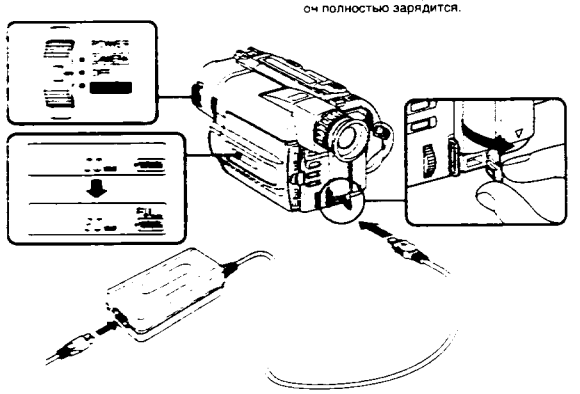

Getting started
Подготовка к эксплуатации





### Notes

- "– – – min" appears in the display window until the camcorder calculates remaining battery time.
- Remaining battery time indication in the display window roughly indicates the recording time with the viewfinder. Use it as a guide. It may differ from the actual recording time.
- If there is a slight difference in shape between the plug of mains lead and the terminal of AC power adaptor, it is ignorable for their mutual connection and power supply.
- Be sure to plug the mains lead deeply into the terminal of AC power adaptor so that it is firmly locked. If there is a gap between the plug of mains lead and the terminal of AC power adaptor, it does not affect the efficiency of the AC power adaptor.

### Charging time

| Battery pack | Charging time* (min.) |
|---|---|
| NP-F330 (supplied) | 150 (90) |
| NP-F530/F550 | 210 (150) |
| NP-F730/F750 | 300 (240) |
| NP-F930/F950 | 390 (330) |

The time required for a normal charge is indicated in parentheses.

* Approximate minutes to charge an empty battery pack using the supplied AC power adaptor. (Lower temperatures require a longer charging time.)

### Battery life

Upper numbers are the time when recording with the viewfinder. Lower numbers are the time when recording with the LCD screen. Using both will further reduce recording time.

### Примечания

- "– – – min" высвечивается в окошке дислея, пока видеокамера вычисляет оставшееся время заряда батарейного блока.
- Индикация оставшегося времени заряда батарейного блока на дисплее приблизительно показывает время записи с помощью видоискателя. Используйте ее в качестве руководства. Это может отличаться от фактического времени записи.
- Если существует небольшое различие по форме между штепсельным разъемом сетевых проводов и гнездом сетевого адаптера переменного тока, то это не влияет на их взаимное соединение и подачу питания.
- Обязательно вставьте разъем сетевого провода глубоко в гнездо сетевого адаптера переменного тока так, чтобы он был надежно зафиксирован. Если остается зазор между разъемом сетевого провода и гнездом сетевого адаптера переменного тока, то это не влияет на эффективность сетевого адаптера переменного тока.

### Время зарядки

| Батарейный блок | Время зарядки* (мин.) |
|---|---|
| NP-F330 (прилагается) | 150 (90) |
| NP-F530/F550 | 210 (150) |
| NP-F730/F750 | 300 (240) |
| NP-F930/F950 | 390 (330) |

Числа в скобках указывают время для нормальной зарядки.

* Приблизительное время в минутах для зарядки полностью разряженного батарейного блока с использованием прилагаемого сетевого адаптера переменного тока. (При более низких температурах потребуется более длительное время зарядки.)

### Срок службы заряда батарейного блока

Верхние цифры указывают время при записи с помощью видоискателя. Нижние цифры указывают время при записи с помощью экрана ЖКД. Использование их обоих значительно снижает время записи.



**CCD-TRV45E**

| Battery pack | Continuous recording time* | Typical recording time** | Playing time on LCD |
|---|---|---|---|
| NP-F330 (supplied) | 120 (105)<br>90 (80) | 60 (55)<br>45 (40) | 90 (80) |
| NP-F530 | 205 (180)<br>150 (135) | 105 (95)<br>80 (70) | 150 (135) |
| NP-F550 | 240 (210)<br>185 (165) | 125 (110)<br>100 (90) | 185 (165) |
| NP-F730 | 410 (370)<br>305 (275) | 215 (195)<br>165 (150) | 305 (275) |
| NP-F750 | 490 (440)<br>375 (335) | 255 (230)<br>205 (180) | 375 (335) |
| NP-F930 | 650 (585)<br>480 (435) | 340 (310)<br>260 (235) | 480 (435) |
| NP-F950 | 750 (675)<br>570 (515) | 395 (355)<br>310 (280) | 570 (515) |

**CCD-TRV55E**

| Battery pack | Continuous recording time* | Typical recording time** | Playing time on LCD |
|---|---|---|---|
| NP-F330 (supplied) | 120 (105)<br>90 (80) | 60 (55)<br>45 (40) | 90 (80) |
| NP-F530 | 205 (180)<br>150 (135) | 105 (95)<br>80 (70) | 145 (130) |
| NP-F550 | 240 (210)<br>185 (165) | 125 (110)<br>100 (90) | 175 (160) |
| NP-F730 | 410 (370)<br>305 (275) | 215 (195)<br>165 (150) | 300 (270) |
| NP-F750 | 490 (440)<br>375 (335) | 255 (230)<br>205 (180) | 365 (325) |
| NP-F930 | 650 (585)<br>480 (435) | 340 (310)<br>260 (235) | 475 (430) |
| NP-F950 | 750 (675)<br>570 (515) | 395 (355)<br>310 (280) | 555 (500) |

Numbers in parentheses indicate the time when you use a normally charged battery.
Battery life will be shorter if you use the camcorder in a cold environment.

* Approximate continuous recording time at 25°C (77°F).
** Approximate minutes when recording while you repeat recording start/stop, zooming and turning the power on/off. The actual battery life may be shorter.

**CCD-TRV45E**

| Батарейный блок | Время непрерывной записи* | Время типичной записи** | Время воспроизведения на ЖКД |
|---|---|---|---|
| NP-F330 (прилагается) | 120 (105)<br>90 (80) | 60 (55)<br>45 (40) | 90 (80) |
| NP-F530 | 205 (180)<br>150 (135) | 105 (95)<br>80 (70) | 150 (135) |
| NP-F550 | 240 (210)<br>185 (165) | 125 (110)<br>100 (90) | 185 (165) |
| NP-F730 | 410 (370)<br>305 (275) | 215 (195)<br>165 (150) | 305 (275) |
| NP-F750 | 490 (440)<br>375 (335) | 255 (230)<br>205 (180) | 375 (335) |
| NP-F930 | 650 (585)<br>480 (435) | 340 (310)<br>260 (235) | 480 (435) |
| NP-F950 | 750 (675)<br>570 (515) | 395 (355)<br>310 (280) | 570 (515) |

**CCD-TRV55E**

| Батарейный блок | Время непрерывной записи* | Время типичной записи** | Время воспроизведения на ЖКД |
|---|---|---|---|
| NP-F330 (прилагается) | 120 (105)<br>90 (80) | 60 (55)<br>45 (40) | 90 (80) |
| NP-F530 | 205 (180)<br>150 (135) | 105 (95)<br>80 (70) | 145 (130) |
| NP-F550 | 240 (210)<br>185 (165) | 125 (110)<br>100 (90) | 175 (160) |
| NP-F730 | 410 (370)<br>305 (275) | 215 (195)<br>165 (150) | 300 (270) |
| NP-F750 | 490 (440)<br>375 (335) | 255 (230)<br>205 (180) | 365 (325) |
| NP-F930 | 650 (585)<br>480 (435) | 340 (310)<br>260 (235) | 475 (430) |
| NP-F950 | 750 (675)<br>570 (515) | 395 (355)<br>310 (280) | 555 (500) |

Числа в скобках указывают время, когда Вы используете нормально заряженный батарейный блок.
Срок службы заряда батарейного блока будет короче, если Вы используете видеокамеру в холодных условиях.

* Приблизительное время непрерывной записи при 25°C (77° F).
** Приблизительное время в минутах при записи с повторным началом/остановкой записи, режимом готовности, наездом видеокамеры и включением/выключением питания. Фактический срок службы заряда батарейного блока может быть короче.

Getting started
Подготовка к эксплуатации





### Notes on remaining battery time indication during recording

- Remaining battery time is displayed in the viewfinder or on the LCD screen. However, the indication may not be displayed properly, depending on using conditions and circumstances.
- When you close the LCD panel and open it again, it takes about 1 minute for the correct remaining time to be displayed.

### To remove the battery pack

While pressing BATT RELEASE, slide the battery pack in the direction of the arrow.

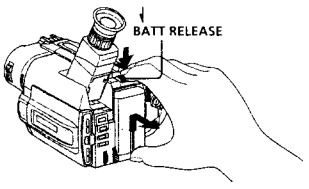


You can look at the demonstration of the functions available with this camcorder (p. 36).

### Примечания к индикации оставшегося времени работы батарейного блока во время записи.

- Оставшееся время работы батарейного блока отображается в видоискателе или на экране ЖКД. Однако, индикация может отображаться неправильно в зависимости от условий и обстоятельств использования.
- Когда Вы закрываете панель ЖКД и открываете ее снова, требуется приблизительно 1 минута для правильного отображения оставшегося времени.

### Для снятия батарейного блока

Нажимая BATT RELEASE, передвиньте батарейный блок в направлении стрелки.

Вы можете просмотреть демонстрацию функций, имеющихся в наличие у данной видеокамеры (стр. 36).

## Inserting a cassette

Make sure that the power source is installed.
(1) While pressing the small blue button on the EJECT switch, slide it in the direction of the arrow. The cassette compartment automatically lifts up and opens.
(2) Insert a cassette with the window facing out.
(3) Close the cassette compartment by pressing the "PUSH" mark on the cassette compartment. The cassette compartment automatically goes down.

### To eject the cassette

While pressing the small blue button on the EJECT switch, slide it in the direction of the arrow.

### To prevent accidental erasure

Slide the tab on the cassette to expose the red mark. If you insert the cassette with the red mark exposed and close the cassette compartment, the beeps sound for a while. If you try to record with the red mark exposed, the ●REC and ⏏ indicators flash, and you cannot record.
To re-record on this tape, slide the tab back out covering the red mark.

## Вставка кассеты

Убедитесь, что источник питания установлен.
(1) Нажимая маленькую синюю кнопку на выключателе EJECT, сдвиньте его в направлении стрелки. Кассетный отсек автоматически поднимается и открывается.
(2) Вставьте кассету окошком, обращенным наружу.
(3) Закройте кассетный отсек путем нажатия знака "PUSH" на кассетном отсеке. Кассетный отсек автоматически опустится вниз.

### Для выталкивания кассеты

Нажимая маленькую синюю кнопку на выключателе EJECT, сдвиньте его в направлении стрелки. Кассетный отсек автоматически поднимается и открывается.

### Для предотвращения случайного стирания

Сдвиньте лепесток на кассете, чтобы было видно красную метку. Если Вы вставите кассету, на которой видна красная метка, и закроете кассетный отсек, зуммерный сигнал будет звучать в течение некоторого времени. Если Вы попытаетесь выполнить запись с выставленной красной меткой, то индикаторы ●REC и ⏏ будут мигать в видоискателе и Вы не сможете произвести запись.
Для выполнения новой записи на такую ленту сдвиньте лепесток назад для закрывания красной метки.

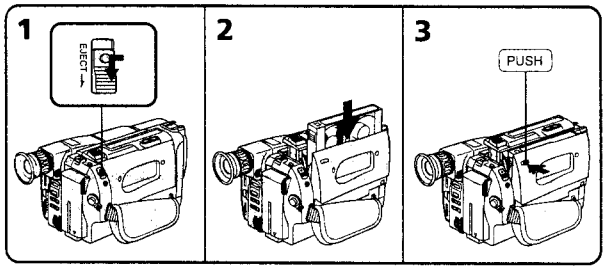


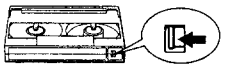





## Camera recording

Make sure that the power source is installed and a cassette is inserted and that the START/STOP MODE switch inside the LCD panel is set to 🎥.
Before you record one-time events, you may want to make a trial recording to make sure that the camcorder is working correctly.
When you use the camcorder for the first time, power on it and reset the date and time to your time before you start recording (p. 75). The date is automatically recorded for 10 seconds after you start recording **(AUTO DATE feature)**. This feature works only once a day.
(1) While pressing the small green button on the POWER switch, set it to CAMERA.
(2) Turn STANDBY up to STANDBY.
(3) Press START/STOP. The camcorder starts recording. The "REC" indicator appears. The red lamp lights up in the viewfinder. The camera recording/battery lamp located on the front of the camcorder also lights up.

## Запись с помощью видеокамеры

Убедитесь, что источник питания установлен,кассета вставлена и переключатель START/STOP MODE внутри панели ЖКД установлен в положение 🎥.
Перед тем как Вы начнете запись одноразовых событий, Вы можете захотеть сделать пробную запись для подтверждения, что видеокамера работает правильно.
Если Вы используете видеокамеру в первый раз, то включите ее и установите дату и время на Ваше местное время перед началом записи (стр. 75) Дата автоматически будет записываться в течение 10 секунд после начала записи **(функция AUTO DATE)**.
Данная функция работает один раз в день.
(1) Нажимая маленькую зеленую кнопку на выключателе POWER, установите его в положение CAMERA.
(2) Поверните STANDBY вверх в положение STANDBY.
(3) Нажмите START/STOP. Видеокамера начинает запись. Появляется индикатор "REC". В видоискателе загорается красная лампочка. Лампочка записи камерой/батареи, расположенная на передней панели видеокамеры, также будет гореть.

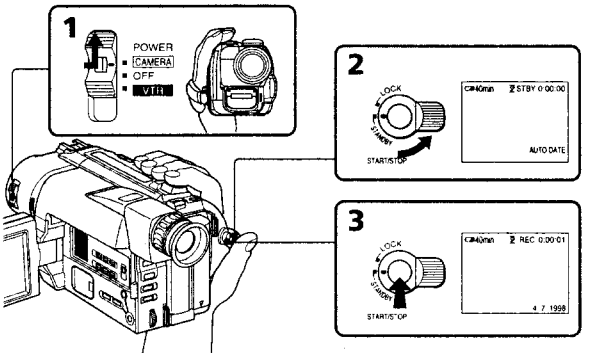






## Camera recording

### To stop recording momentarily [a]

Press START/STOP again. The "STBY" indicator appears in the viewfinder **(Standby mode)**.

### To finish recording [b]

Press START/STOP again. Turn STANDBY down to LOCK and set the POWER switch to OFF. Then, eject the cassette.

[a]

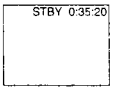


[b]

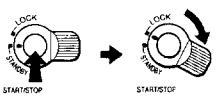


### Note

There is a little wear on the battery pack which is installed with the camcorder. However, for getting remaining battery time indicated correctly, leave the battery pack installed after use.

### To focus the viewfinder lens

You cannot see the indicators in the viewfinder clearly, or after someone else has used the camcorder, focus the viewfinder lens. Turn the viewfinder lens adjustment ring so that the indicators in the viewfinder come into sharp focus.

## Запись с помощью видеокамеры

### Для временной остановки записи [a]

Снова нажмите START/STOP. Индикатор "STBY" появляется в видоискателе **(режим готовности)**.

### Для окончания записи [b]

Снова нажмите START/STOP. Поверните STANDBY вниз в положение LOCK и установите выключатель POWER в положение OFF. Затем вытолкните кассету.

### Примечание

Будет происходить небольшая разрядка батарейного блока, который установлен в видеокамере. Однако, для того, чтобы время оставшегося заряда батарейного блока отображалось точно, оставьте батарейный блок в видеокамере после использования.

### Для фокусировки объектива видоискателя

Если Вы не можете четко видеть индикаторы в видоискателе или после того, как кто-то другой использовал видеокамеру, выполните фокусировку объектива видоискателя. Поверните кольцо регулировки объектива видоискателя, так, чтобы индикаторы в видоискателе были четко сфокусированы.

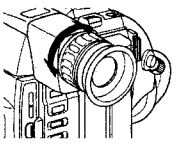





## Camera recording

### Note on Standby mode

If you leave the camcorder in Standby mode for 5 minutes while the cassette is inserted, the camcorder turns off automatically for saving battery power as well as for preventing the battery and tape from wearing down. To resume Standby mode, turn STANDBY down and up again. To start recording, press START/STOP.

### Note on recording

When you record from the beginning of a tape, run the tape for about 15 seconds before starting the actual recording. This will ensure that you won't miss any start-up scenes when you play back the tape.

### Notes on the tape counter

- The tape counter indicates the recording or playback time. Use it as a guide. There will be a time lag of several seconds from the actual time. To set the counter to zero, press COUNTER RESET.
- If the tape is recorded in SP and LP modes mixed, the tape counter shows incorrect recording time. When you intend to edit the tape using the tape counter as a guide, record in same (SP or LP) mode.

### Note on the beep sound

The beep sounds when you operate the camcorder. Several beeps also sound as a warning of any unusual condition of the camcorder.
Note that the beep sound is not recorded on the tape. If you do not want to hear the beep sound, select "OFF" in the menu system.

## Запись с помощью видеокамеры

### Примечание к режиму готовности

Если Вы оставляете видеокамеру в режиме готовности на 5 минут при вставленной кассете, видеокамера выключится автоматически в целях как для экономии заряда батарейного блока, так и для предотвращения износа батарейного блока ленты. Для восстановления режима готовности поверните STANDBY вниз, а затем снова вверх. Для начала записи нажмите START/STOP.

### Примечание к записи

Когда Вы начинаете запись от начала ленты, перематывайте ленту в течение 15 секунд перед началом фактической записи. Это будет гарантировать, что Вы не пропустите каких-либо начальных фрагментов, когда будете воспроизводить ленту.

### Примечания к счетчику ленты

- Счетчик ленты указывает время записи или воспроизведения. Используйте его в качестве руководства. Существует отставание по времени на несколько секунд от фактического времени. Для установки счетчика на нуль нажмите COUNTER RESET.
- Если лента записана с чередованием режимов SP и LP, то счетчик ленты будет показывать неправильное время записи. Если Вы намереваетесь производить монтаж ленты с использованием счетчика ленты в качестве указателя, то выполняйте запись в одном и том же режиме (SP или LP).

### Примечания к зуммерному звуковому сигналу

Зуммерный сигнал звучит, когда Вы работаете с видеокамерой. Несколько зуммерных сигналов также будет звучать в качестве предупреждения какого-нибудь необычного состояния видеокамеры. Заметьте, что зуммерный сигнал не записывается на ленту. Если Вы не хотите слушать зуммерный сигнал, то выберите "OFF" в системе меню.

**Note on the AUTO DATE feature**
The clock is set at the factory to Sydney time for Australia and New Zealand models, to Tokyo time for the models sold in Japan, and to Hong Kong time for other models. You can reset the clock in the menu system. You can change the AUTO DATE settings by selecting ON or OFF in the menu system. The AUTO DATE feature shows the date automatically once a day. However, the date may automatically appear more than once a day when:
- you reset the date and time.
- you eject and insert the tape again.
- you stop recording within 10 seconds.
- you set AUTO DATE to OFF once and set it to ON again in the menu system.

## Using the zoom feature

Zooming is a recording technique that lets you change the size of the subject in the scene. For more professional-looking recordings, use the zoom function sparingly.
"T" side: for telephoto (subject appears closer)
"W" side: for wide-angle (subject appears farther away)

**Примечание к функции AUTO DATE**
Часы установлены на заводе на время Сиднея для австралийских и новозеландских моделей, на время Токио для моделей, продаваемых в Японии, и на время Гонконга для остальных моделей. Вы можете переустановить часы в системе меню. Вы можете изменить установки AUTO DATE путем выбора ON или OFF в системе меню. Функция AUTO DATE показывает дату автоматически один раз в день. Однако, дата может автоматически появится более одного раза в день, когда:
- Вы заново устанавливаете дату и время.
- Вы вытолкнули ленту и вставили ее снова.
- Вы остановили запись в пределах 10 секунд.
- Вы установили функцию AUTO DATE в системе меню на OFF, а затем снова на ON.

## Использование функции наезда видеокамеры

Наезд видеокамеры является техническим приемом записи, который позволяет Вам изменять размер объекта в кадре. Для более профессионального вида записей умеренно используйте функцию наезда видеокамеры.
Сторона "T": для телефото (объект приближается)
Сторона "W": для широкого угла съемки (объект удаляется)

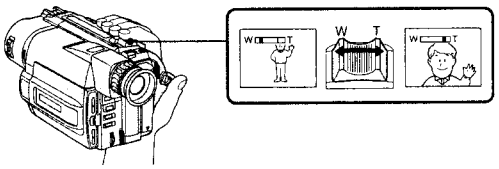






**Zooming speed (Variable speed zooming)**
Move the power zoom lever a little for a slower zoom, move it further for a faster zoom.

**When you shoot a subject using a telephoto zoom**
If you cannot get a sharp focus while in extreme telephoto zoom, move the power zoom lever to the "W" side until the focus is sharp. You can shoot a subject that is at least about 80 cm (about 2 5/8 feet) away from the lens surface in the telephoto position, or about 1 cm (about 1/2 inch) away in the wide-angle position.

**Notes on digital zoom**
- More than 18x zoom is performed digitally, and the picture quality deteriorates as you go toward the "T" side. If you do not want to use the digital zoom, set the D ZOOM function to OFF in the menu system.
- The right side **[a]** of the power zoom indicator shows the digital zooming zone, and the left side **[b]** shows the optical zooming zone. If you set the D ZOOM function to OFF, the **[a]** zone disappears.

**Скорость наезда видеокамеры (наезд с различной скоростью)**
Передвиньте рычаг приводного трансфокатора немного для сравнительно медленного наезда видеокамеры, передвиньте его еще дальше для наезда на высокой скорости.

**Когда Вы снимаете объект, используя наезд в режиме телефото**
Если Вы не можете получить четкой фокусировки во время крайнего наезда в режиме телефото, перемещайте рычаг приводного трансфокатора в сторону "W" до тех пор, пока Вы не получите четкой фокусировки. Вы можете снимать объект, который по меньшей мере на 80 см удален от поверхности объектива в положении телефото, или удален приблизительно на 1 см в положении широкого угла.

**Примечания к цифровому трансфокатору**
- Трансфокатор более, чем с 18-кратным увеличением создан в цифровом исполнении, и качество изображения ухудшается по мере Вашего движения в сторону "T". Если Вы не хотите использовать цифровой трансфокатор, установите функцию D ZOOM в системе меню на OFF.
- Правая сторона **[a]** индикатора приводного трансфокатора показывает зону цифровой трансфокации, а левая сторона **[b]** показывает зону оптической трансфокации. Если Вы установите функцию D ZOOM на OFF, то зона **[a]** исчезнет.

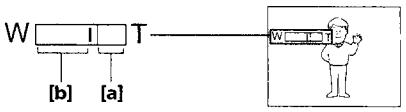






## Selecting the START/STOP mode

Your camcorder has three modes. These modes enable you to take a series of quick shots resulting in a lively video.
**(1)** While pressing OPEN, open the LCD panel.
**(2)** Set START/STOP MODE to the desired mode.
: Recording starts when you press START/STOP, and stops when you press it again (normal mode).
ANTI GROUND SHOOTING : The camcorder records only while you press down START/STOP so that you can avoid recording unnecessary scenes.
5SEC: When you press START/STOP, the camcorder records for 5 seconds and then stops automatically.
**(3)** Turn STANDBY up to STANDBY and press START/STOP. Recording starts.
If you selected 5SEC, the tape counter disappears and five dots appear. The dots disappear at a rate of one per second as illustrated below.

## Выбор режима START/STOP

Ваша видеокамера имеет три режима. Эти режимы позволяют Вам снять серию коротких кадров, создавая в результате оживленную видеопрограмму.
**(1)** Нажимая OPEN, откройте панель ЖКД.
**(2)** Установите переключатель START/STOP MODE на желаемый режим.
: Запись начинается когда Вы нажимаете START/STOP и заканчивается, когда Вы нажимаете эту кнопку снова (нормальный режим).
ANTI GROUND SHOOTING : Видеокамера производит запись только тогда, когда Вы держите START/STOP в нажатом состоянии, так, что Вы можете избежать записи ненужных сцен.
5SEC: Когда Вы нажимаете START/STOP, видеокамера производит запись в течение 5 секунд, а затем останавливается автоматически.
**(3)** Поверните STANDBY вверх в положение STANDBY и нажмите START/STOP. Запись начинается.
Если Вы выбрали 5SEC, счетчик ленты исчезает и появляются пять точек. Точки исчезают со скоростью по одной за секунду, как показано ниже на рисунке.

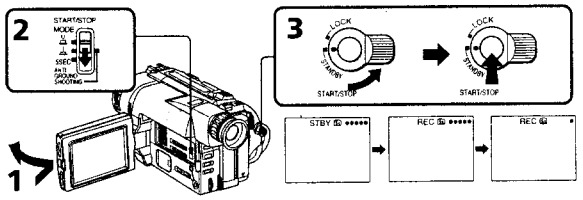


**To extend the recording time in 5SEC mode**
Press START/STOP again before all the dots disappear. Recording continues for about 5 seconds from the moment you press START/STOP.

**Notes on START/STOP mode**
- If you have turned off the indicators on the LCD screen, the dots do not appear.
- You cannot use FADER in 5SEC or mode.

**Для продления времени записи в режиме 5SEC**
Нажмите START/STOP снова до того, как все точки исчезнут. Запись продолжается еще в течение 5 секунд с момента нажатия START/STOP.

**Примечания к режиму START/STOP**
- Если Вы выключили индикаторы на экране ЖКД, точки появляться не будут.
- Вы не можете использовать функцию FADER в режиме 5SEC или .





## Shooting with the LCD screen

You can also record the picture while looking at the LCD screen.
When using the LCD screen, the viewfinder turns off automatically. You cannot monitor the sound from the speaker during recording.
**(1)** While pressing OPEN, open the LCD panel.
**(2)** Adjust the angle of the LCD panel.
The LCD panel moves about 90 degrees to this side and about 210 degrees to the other side.
To adjust the brightness of the LCD screen, press LCD BRIGHT.
+ side: to brighten the LCD screen
– side: to dim the LCD screen
The battery life is longer when the LCD panel is closed. Use the viewfinder instead of the LCD screen to save the battery power.

## Съемка с использованием экрана ЖКД

Вы можете также производить запись изображения, глядя на экран ЖКД.
При использовании экрана ЖКД экран видоискателя выключается автоматически. Вы не можете слышать звук от громкоговорителя во время записи.
**(1)** Нажимая OPEN, откройте панель ЖКД.
**(2)** Отрегулируйте угол панели ЖКД.
Панель ЖКД перемещается приблизительно на 90 градусов в эту сторону и приблизительно на 210 градусов в другую сторону.
Для регулировки яркости экрана ЖКД нажмите LCD BRIGHT.
Сторону +: для получения более яркого экрана ЖКД
Сторону –: Для получения более тусклого экрана ЖКД
Срок службы заряда батарейного блока будет длиннее, когда панель ЖКД закрыта. Используйте видоискатель вместо экрана ЖКД для экономии заряда батарейного блока.

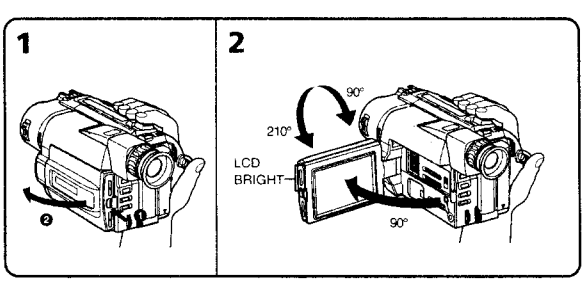


**Backlighting the LCD screen**
If the LCD screen is insufficiently illuminated even after adjusting LCD BRIGHT, select LCD B. L. in the menu system and set to BRIGHT. You can select LCD B. L. only while using the battery pack as a power source.

**Задняя подсветка экрана ЖКД**
Если экран ЖКД недостаточно освещен даже после регулировки LCD BRIGHT, то выберите LCD B. L. в системе меню и установите BRIGHT. Вы можете выбрать LCD B. L. только при использовании батарейного блока в качестве источника питания.

**Notes on the LCD panel**

- When closing the LCD panel, turn it vertically until it clicks **[a]**.
- When turning the LCD panel, turn it always vertically; otherwise, the camcorder body may be damaged or the LCD panel may not close properly **[b]**.
- Close the LCD panel completely when not in use.

**[a]**

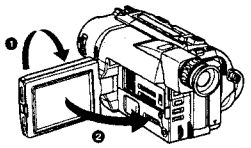

**[b]**

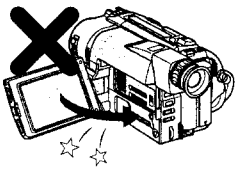

## Letting the subject monitor the shot (Mirror mode)

You can turn the LCD panel over so that it faces the other way and you can let the subject monitor the shot while shooting with the viewfinder.

Turn the LCD panel vertically first until it clicks, then turn it over. The ☺ indicator appears on the LCD screen **(Mirror mode)** and the date and remaining tape indicators disappear.

### To cancel mirror mode

Turn the LCD panel back toward the viewfinder.

**Notes on mirror mode**

- The picture on the LCD looks as a mirror-image while recording in mirror mode. The STBY indicator appears as ●II and REC as ●. The other indicators may not appear in mirror mode.
- While recording in mirror mode, you cannot operate the following buttons: TITLE, DATE, TIME and MENU.
- The date appears in reverse when the AUTO DATE feature is turned on. When recorded, it will be normal.

**Примечания к панели ЖКД**

- При закрывании панели ЖКД поворачивайте ее вертикально до тех пор, пока она не защелкнется **[a]**.
- При вращении панели ЖКД двигайте ее всегда вертикально; или в противном случае корпус видеокамеры может быть поврежден или панель ЖКД может быть закрыта неправильно **[b]**.
- Полностью закройте панель ЖКД, когда она не используется.

## Возможность для снимаемого человека наблюдать съемку (Зеркальный режим)

Вы можете перевернуть панель ЖКД, так, что она будет обращена в другую сторону и Вы позволите снимаемому человеку наблюдать съемку, контролируя запись в видоискателе.

Сперва поворачивайте панель ЖКД, держа ее вертикально, пока она не защелкнется, а затем переверните ее. Индикатор ☺ появится на экране ЖКД **(зеркальный режим)** и индикаторы даты и оставшейся ленты исчезнут.

### Для отмены зеркального режима

Поверните панель ЖКД назад в направлении видоискателя.

**Примечания к зеркальному режиму**

- Изображение на экране ЖКД появляется в зеркальном отображении во время записи в зеркальном режиме. Индикатор STBY появляется в виде ●II, а REC в виде ●. Другие индикаторы появляются, как зеркальные отображения. Некоторые индикаторы могут не появляться в зеркальном режиме.
- Во время записи в зеркальном режиме, Вы не можете использовать следующие кнопки: TITLE, DATE, TIME и MENU.
- Дата появляется в обратном порядке, когда включена функция AUTO DATE. После записи она будет выглядеть нормально.







For hand-held shots, you'll get better results by holding the camcorder according to the following suggestions.

- Hold the camcorder firmly and secure it with the grip strap so that you can easily manipulate the controls with your thumb.

Для кадров при удержании видеокамеры в руках Вы получите лучшие результаты, если будете держать видеокамеру в соответствии со следующими рекомендациями:

- Держите видеокамеру крепко и закрепите ее с помощью ременного захвата так, чтобы Вы легко могли манипулировать регуляторами с помощью большого пальца.

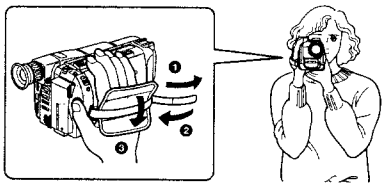

- Place your right elbow against your side.
- Place your left hand under the camcorder to support it. Be sure to not touch the built-in microphone.
- Place your eye firmly against the viewfinder eyecup.
- Use the viewfinder frame as a guide to determine the horizontal plane.
- You can also record in a low position to get an interesting angle. Lift the viewfinder up for recording from a low position **[a]**.
- You can also record in a low position or even in a high position using the LCD panel **[b]**.
- When you use the LCD screen outdoors in direct sunlight, the LCD screen may be difficult to see. If this happens, we recommend that you use the viewfinder.

- Расположите Ваши локти по бокам от себя.
- Расположите Вашу левую руку под видеокамерой для ее поддержки. Ни в коем случае не трогайте встроенный микрофон.
- Надежно прижмите Ваш глаз к окуляру видоискателя.
- Используйте визирную рамку видоискателя в качестве руководства для определения горизонтального плана.
- Вы также можете записывать из низкого положения для получения интересного угла записи. Поднимите видоискатель вверх для записи из низкого положения **[a]**.
- Вы также можете записывать из низкого положения или даже из высокого положения с использованием панели ЖКД **[b]**.
- Когда Вы используете экран ЖКД на улице под прямым солнечным светом, то изображение на экране ЖКД может быть трудным для просмотра. Если это случится, то мы рекомендуем Вам использовать видоискатель.

**[a]**

**[b]**

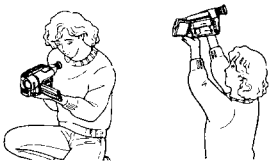





**Place the camcorder on a flat surface or use a tripod**

When placing the camcorder on a table top or any other flat surface of suitable height. If you have a tripod for a still camera, you can also use it with the camcorder.

When attaching a non-Sony tripod, make sure that the length of the tripod screw is less than 6.5 mm (¼ 32 inch). Otherwise, you cannot attach the tripod securely and the screw may damage the camcorder.

**Cautions on the viewfinder and the LCD**

- Do not pick up the camcorder by the viewfinder or by the LCD panel **[c]**.
- Do not place the camcorder so as to point the viewfinder or the LCD screen toward the sun. The inside of the viewfinder may be damaged. Be careful when placing the camcorder under sunlight or by a window **[d]**.

**Располагайте видеокамеру на плоской поверхности или используйте треногу**

Постарайтесь расположить видеокамеру сверху на столе или любой другой плоской поверхности подходящей высоты. Если у Вас есть тренога для фотоаппарата, Вы также можете использовать ее и для видеокамеры. При прикреплении треноги не фирмы Sony убедитесь, что длина винта треноги менее 6,5 мм. В противном случае винт может повредить внутренние части видеокамеры.

**Предосторожности к панели ЖКД и видоискателю**

- Не поднимайте видеокамеру за видоискатель или панель ЖКД **[c]**.
- Не располагайте видеокамеру так, чтобы объектив или экран ЖКД были направлены в сторону солнца. Внутренние части видоискателя или панели ЖКД могут быть повреждены. Будьте осторожны при расположении видеокамеры под солнцем или возле окна **[d]**.



**[c]**

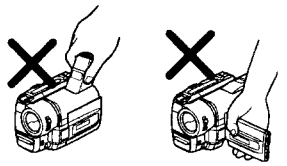

**[d]**

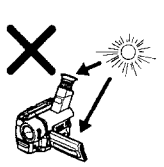





Using EDITSEARCH, you can review the last recorded scene or check the recorded picture in the viewfinder or on the LCD screen.

**(1)** While pressing the small green button on the POWER switch, set it to CAMERA.
**(2)** Turn STANDBY up to STANDBY.
**(3)** Press the – (⊖) side of EDITSEARCH momentarily; the last few seconds of the recorded portion play back **(Rec Review)**. You can monitor the sound from the speaker or headphones.
Hold down the – side of EDITSEARCH until the camcorder goes back to the scene you want. The last recorded portion is played back. To go forward, hold down the + side **(Edit Search)**.

Используя EDITSEARCH, Вы можете пересмотреть последнюю записанную сцену или проверить записанное изображение на экране ЖКД.

**(1)** Нажимая маленькую зеленую кнопку на выключателе POWER, установите его в положение CAMERA.
**(2)** Поверните STANDBY вверх в положение STANDBY.
**(3)** На мгновение нажмите сторону – (⊖) кнопки EDITSEARCH; последние несколько секунд записанной части будут воспроизведены **(пересмотр записи)**. Вы можете прослушивать звук через громкоговоритель или головные телефоны.
Держите нажатой сторону – кнопки EDITSEARCH до тех пор, пока видеокамера не вернется к желаемой сцене. Последняя записанная часть будет воспроизведена. Для продвижения вперед держите нажатой сторону + **(монтажный поиск)**.

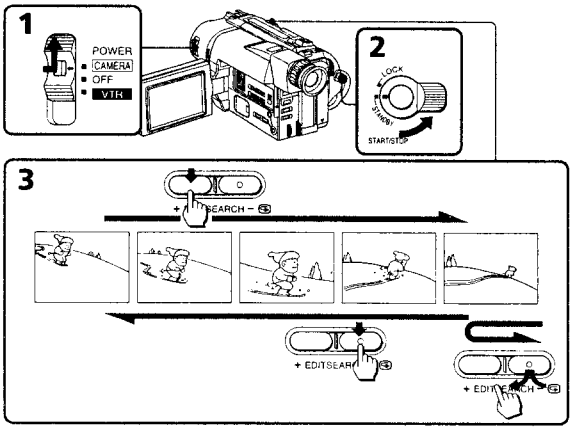

### To stop playback
Release EDITSEARCH.

### To go back to the last recorded point after edit search
Press END SEARCH. The last recorded point is played back for about 5 seconds (10 seconds in LP mode) and stops. Note that this function does not work once you eject the cassette after you recorded on the tape.

### To begin re-recording
Press START/STOP. Re-recording begins from the point you released EDITSEARCH. Provided you do not eject the cassette, the transition between the last scene you recorded and the next scene you record will be smooth.

### Для остановки воспроизведения
Отпустите EDITSEARCH.

### Для возвращения к последней записанной точке после выполнения монтажного поиска
Нажмите END SEARCH. Воспроизведение последнего записанного места будет выполнено приблизительно в течение 5 секунд (10 секунд в режиме LP) и остановлено. Заметьте, что данная функция не работает, если Вы вытолкнете кассету после выполнения записи на ленте.

### Снова для начала записи
Нажмите START/STOP. Запись начинается от точки, где Вы отпустили EDITSEARCH. При условии, что Вы не вытолкнете кассету, переход между последней сценой, которую Вы записали, и следующей сценой, которую Вы записываете, будет плавным.





## Playing back a tape | Воспроизведение ленты

You can monitor the playback picture on the LCD screen.
(1) While pressing the small green button on the POWER switch, set it to VTR. The video control buttons light up.
(2) Insert the recorded tape with the window facing out.
(3) While pressing OPEN, open the LCD panel. Adjust the angle of the LCD panel or the brightness of the LCD screen if necessary.
(4) Press ◄◄ to rewind the tape.
(5) Press ► to start playback.
(6) Adjust the volume using VOLUME and adjust the brightness of the LCD screen using LCD BRIGHT.
You can also monitor the picture on a TV screen, after connecting the camcorder to a TV or VCR.

Вы можете просматривать изображение на экране ЖКД.
(1) Нажимая маленькую зеленую кнопку на выключателе POWER, установите его в положение VTR. Высветятся рабочие кнопки видеокамеры.
(2) Вставьте записанную ленту окошком, обращенным наружу.
(3) Нажимая OPEN, откройте панель ЖКД. Отрегулируйте угол панели ЖКД или яркость экрана ЖКД, если это требуется.
(4) Нажмите ◄◄ для ускоренной перемотки ленты назад.
(5) Нажмите ► для начала воспроизведения.
(6) Отрегулируйте громкость с использованием VOLUME и отрегулируйте яркость экрана ЖКД с использованием LCD BRIGHT.
Вы можете также просмотреть изображение на экране телевизора после подсоединения видеокамеры к телевизору или КВМ.

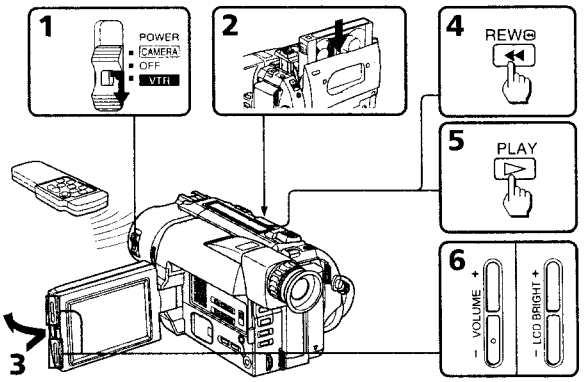


To stop playback, press ■.
To rewind the tape, press ◄◄.
To fast-forward the tape rapidly, press ►►.

Для остановки воспроизведения нажмите ■.
Для ускоренной перемотки ленты назад нажмите ◄◄.
Для ускоренной перемотки ленты вперед нажмите ►►.





### When monitoring on the LCD screen
You can turn the LCD panel over and move back to the camcorder with the LCD screen facing out **[a]**. You can adjust the angle of the LCD screen by turning the LCD screen up to 15 degrees **[b]**.

### При просмотре на экране ЖКД
Вы можете перевернуть панель ЖКД и придвинуть ее назад к видеокамере с экраном ЖКД, обращенным наружу **[a]**. Вы можете отрегулировать угол экрана ЖКД, поворачивая экран ЖКД вверх до 15 градусов **[b]**.

**[a]** **[b]**

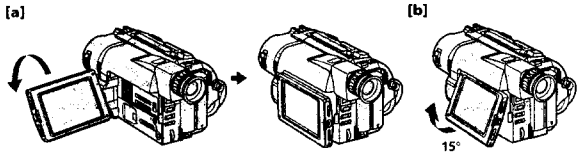


### Using the remote commander
You can control playback using the supplied Remote Commander. Before using the Remote Commander, insert the R6 (size AA) batteries.

**Note on DISPLAY button**
Press DISPLAY to display the screen indicators on the LCD screen. To erase the indicators, press DISPLAY again. If the POWER switch is set to CAMERA, you can erase the indicator by pressing DISPLAY.

**Using headphones**
Connect headphones (not supplied) to the ∩ jack. You can adjust the volume using VOLUME. When you use headphones, the speaker on the camcorder is silent.

**To view the playback picture in the viewfinder**
Close the LCD panel. The viewfinder turns on automatically. When using the viewfinder, you can monitor sound only by using headphones. To view on the LCD screen again, open the LCD panel. The viewfinder turns off automatically.

**Note on the lens cover**
The lens cover does not open when the POWER switch is set to VTR. Do not open the lens cover manually. It may cause malfunction.

### Использование пульта дистанционного управления
Вы можете управлять воспроизведением с помощью прилагаемого пульта дистанционного управления. Перед использованием пульта дистанционного управления вставьте в него батарейки R6 (размером AA).

**Примечание к кнопке DISPLAY**
Нажмите DISPLAY для отображения экранных индикаторов на экране ЖКД. Для стирания индикаторов нажмите DISPLAY снова. Если выключатель POWER установлен в положение CAMERA, Вы можете стереть индикаторы путем нажатия DISPLAY.

**Использование головных телефонов или наушников**
Подсоедините головные телефоны (не прилагаются) к гнезду ∩. Вы сможете регулировать громкость с помощью VOLUME. Когда Вы используете головные телефоны, звук от громкоговорителя видеокамеры будет отключен.

**Для воспроизведения изображения в видоискателе**
Закройте панель ЖКД. Видоискатель включится автоматически. При использовании видоискателя Вы можете прослушивать звук только с помощью головных телефонов.
Для просмотра на экране ЖКД снова откройте панель ЖКД. Видоискатель выключится автоматически.

**Примечание к крышке объектива**
Крышка объектива не открывается, когда выключатель POWER установлен в положение VTR. Не открывайте крышку объектива вручную. Это может привести к неисправности.





### Various playback modes
With CCD-TRV55E, you can enjoy clear pictures during still, slow and picture search. With CCD-TRV45E, you can enjoy clear pictures on the LCD screen during still, slow and picture search.
**(Crystal-clear still/slow/picture search)**

**To view a still picture (playback pause)**
Press ❚❚ during playback. To resume playback, press ❚❚ or ►.

**To locate a scene (picture search)**
Keep pressing ◄◄ or ►► during playback. To resume normal playback, release the button.

**To monitor the high-speed picture while advancing the tape or rewinding (skip scan)**
Keep pressing ◄◄ while rewinding or ►► while advancing the tape. To resume normal playback, press ►.

**To view the picture at 1/5 speed (slow playback)**
Press I► on the Remote Commander during playback. To resume normal playback, press ►. If slow playback lasts for about 1 minute, it shifts to normal speed automatically.

**To select the playback sound**
Change the "HiFi SOUND" mode setting in the menu system.

Notes on playback
- Noise may appear when you use the crystal-clear still/slow/picture search function to play back the tape recorded in LP mode.
- Streaks appear and the sound is muted in the various playback modes.
- When playback pause mode lasts for 5 minutes, the camcorder automatically enters stop mode.
- You can play back the tapes recorded in the Hi8 video system on the standard 8 mm camcorder.

### Различные режимы воспроизведения
При использовании CCD-TRV55E Вы можете наслаждаться четким изображением при просмотре стоп-кадра, замедленного воспроизведения и поиска изображения. При использовании CCD-TRV45E Вы можете наслаждаться четким изображением при просмотре на экране ЖКД стоп-кадра, замедленного воспроизведения и поиска изображения.
**(Кристально чистые стоп-кадр/замедленное воспроизведение/поиск изображения)**

**Для просмотра неподвижного изображения (пауза воспроизведения)**
Нажмите ❚❚ во время воспроизведения. Для восстановления воспроизведения нажмите ❚❚ или ►.

**Для обнаружения фрагмента (поиск изображения)**
Держите нажатой кнопку ◄◄ или ►► во время воспроизведения. Для восстановления нормального воспроизведения отпустите кнопку.

**Для контроля изображения на высокой скорости во время ускоренной перемотки ленты вперед или назад (поиск методом прогона)**
Держите нажатой кнопку ◄◄ во время перемотки ленты назад или кнопку ►► во время перемотки ленты вперед. Для восстановления нормального воспроизведения нажмите ►.

**Для просмотра изображения на 1/5 скорости (замедленное воспроизведение)**
Нажмите I► на пульте дистанционного управления во время воспроизведения. Для восстановления нормального воспроизведения нажмите ►. Если замедленное воспроизведение продолжается приблизительно в течение 1 минуты, аппарат переключится на нормальную скорость автоматически.

**Для выбора воспроизводимого звука**
Измените установку "HiFi SOUND" в системе меню.

**Примечания к воспроизведению**
- Помехи могут появляться, когда Вы используете функцию кристально чистого стоп-кадра/замедленного воспроизведения/поиска изображения при воспроизведении ленты, записанной в режиме LP.
- "Тянучки" появляются и звук будет приглушен в различных режимах воспроизведения.
- Если режим паузы воспроизведения продолжается в течение 5 минут, видеокамера автоматически войдет в режим останова.
- Вы можете воспроизводить ленты, записанные в видеосистеме Hi8 на стандартной видеокамере с 8-лентой.

## Searching for the end of the picture

## Поиск конца изображения

You can go to the end of the recorded portion after you record and play back the tape to make the transition between the last scene you recorded and the next scene smooth. The tape starts rewinding or fast-forwarding and the last 5 seconds (10 seconds in LP mode) of the recorded portion play back. Then the tape stops at the end of the recorded picture **(End Search)**.
Note that the End Search function does not work once you eject the cassette after you have recorded on the tape.
**(1)** While pressing OPEN, open the LCD panel.
**(2)** Press END SEARCH.
This function works when the POWER switch is set to either CAMERA or VTR.

Вы можете перейти к концу записанной части после записи и воспроизведения ленты для выполнения плавного перехода между последней сценой, которую Вы записали, и последующей сценой. Лента начинает перематываться назад или вперед, и последние 5 секунд (10 секунд в режиме LP) записанной части будут воспроизведены. Затем лента остановится в конце записанного изображения **(поиск конца)**.
Заметьте, что функция поиска конца не работает, если Вы вытолкнули кассету после выполнения записи на ленте.
**(1)** Нажимая OPEN, откройте панель ЖКД.
**(2)** Нажмите END SEARCH.
Данная функция работает когда выключатель POWER установлен либо в положение CAMERA, либо в положение VTR.

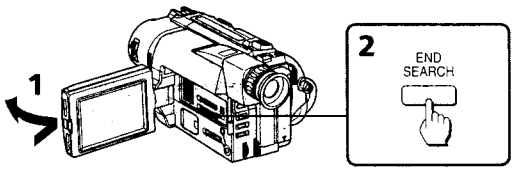


**If you start recording after using END SEARCH**
Occasionally, the transition between the last scene you recorded and the next scene may not be smooth.

**Если Вы начали запись после использования END SEARCH**
Изредка переход между последней сценой, которую Вы записали, и последующей сценой может не быть плавным.







## Using alternative power sources

## Использование альтернативных источников питания

You can choose any of the following power sources for your camcorder: battery pack, the mains, alkaline batteries and 12/24 V car battery. Choose the appropriate power source depending on where you want to use your camcorder.

| Place | Power source | Accessory to be used |
|---|---|---|
| Indoors | Mains | Supplied AC power adaptor |
| Outdoors | Battery pack | Battery pack NP-F330 (supplied), NP-F530, NP-F550, NP-F730, NP-F750, NP-F930, NP-F950 |
| | LR6 (size AA) Alkaline battery | Battery case EBP-L7 |
| In the car | 12 V or 24 V car battery | Sony car battery charger DC-V515A |

**Notes on power sources**
- Disconnecting the power source or removing the battery pack during recording or playback may damage the inserted tape.
- The DC IN jack has power source priority. This means that the battery pack cannot supply any power if the mains lead is connected to the DC IN jack, even when the mains lead is not plugged into the mains.

### Using the mains

**(1)** Open the DC IN jack cover, and connect the AC power adaptor to the DC IN jack on the camcorder.
**(2)** Connect the mains lead to the AC power adaptor.
**(3)** Connect the mains lead to the mains.

Вы можете выбрать любой из следующих источников питания для Вашей видеокамеры: батарейный блок, электрическую сеть, щелочные батарейки и 12/24 В автомобильный аккумулятор. Выберите подходящий источник питания в зависимости от того, где Вы хотите использовать Вашу видеокамеру.

| Место | Источник питания | Используемые принадлежности |
|---|---|---|
| В помещении | Электрическая сеть | Прилагаемый сетевой адаптер перем. тока |
| На улице | Батарейный блок | Батарейный блок NP-F330 (прилагается), NP-F530, NP-F550, NP-F730, NP-F750, NP-F930, NP-F950 |
| | Щелочные батарейки LR6 (размера AA) | Батарейная камера EBP-L7 |
| В автомобиле | 12 В или 24 В автомобильный аккумулятор | Зарядный выпрямитель автомобильного аккумулятора DC-V515A |

**Примечания по источникам питания**
- Отсоединение источника питания или снятие батарейного блока во время записи или воспроизведения может повредить вставленную ленту.
- Гнездо DC IN обладает приоритетом в качестве источника питания. Это означает, что питания от батарейного блока подаваться не может, если сетевой провод подсоединен к гнезду DC IN, даже кода сетевой провод не включен в электрическую сеть.

### Использование электрической сети

**(1)** Откройте крышку гнезда DC IN и подсоедините сетевой адаптер переменного тока к гнезду DC IN на видеокамере.
**(2)** Подсоедините сетевой провод к сетевому адаптеру переменного тока.
**(3)** Подсоедините сетевой провод к сети.

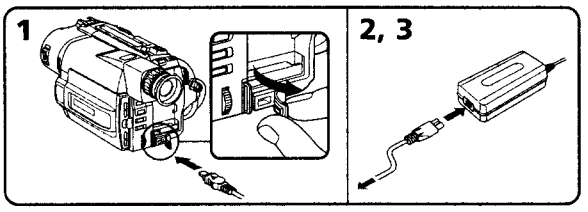




## Using alternative power sources

## Использование альтернативных источников питания

**WARNING**
The mains lead must only be changed at a qualified service shop.

**PRECAUTION**
The set is not disconnected from the AC power source (mains) as long as it is connected to the mains, even if the set itself has been turned off.

**Note**
Keep the AC power adaptor away from the camcorder if the picture is disturbed.

### Using a car battery

Use Sony DC-V515A car battery charger (not supplied). Connect the car battery cord to the cigarette lighter socket of a car (12 V or 24 V). Refer to the operating instructions of your car battery charger.

**To remove the car battery charger**
The car battery charger is removed in the same way as the battery pack.

This mark indicates that this product is a genuine accessory for Sony video products.
When purchasing Sony video products, Sony recommends that you purchase accessories with this "GENUINE VIDEO ACCESSORIES" mark.

**ПРЕДУПРЕЖДЕНИЕ**
Сетевой провод должен быть заменен только в мастерской квалифицированного обслуживания.

**ПРЕДОСТЕРЕЖЕНИЕ**
Аппарат не отключается от источника питания перем. тока (электрической сети) до тех пор, пока он подключен к электрической сети, даже если сам аппарат выключен.

**Примечание**
Держите сетевой адаптер переменного тока подальше от видеокамеры, если изображение содержит помехи.

### Использование автомобильного аккумулятора

Используйте зарядный выпрямитель автомобильного аккумулятора Sony DC-V515A (не прилагается). Подсоедините шнур автомобильного аккумулятора к гнезду сигаретного прикуривателя автомобиля (12 В или 24 В).
Обратитесь к инструкции по эксплуатации Вашего автомобильного зарядного выпрямителя.

**Для снятия зарядного выпрямителя автомобильного аккумулятора**
Зарядный выпрямитель автомобильного аккумулятора снимается таким же образом, как и батарейный блок.

Настоящий знак указывает, что данная продукция является подлинной принадлежностью видеопродукции Sony.
Если Вы покупаете видеопродукцию Sony, то мы рекомендуем, чтобы Вы покупали принадлежности, помеченные знаком "GENUINE VIDEO ACCESSORIES".





## Changing the mode settings

## Изменение установок режимов

You can change the mode settings in the menu system to further enjoy the features and functions of the camcorder.
**(1)** Press MENU to display the menu.
**(2)** Turn the control dial to select the desired icon in the left side of the menu, then press the dial.
**(3)** Turn the control dial to select the desired item, then press the dial.
**(4)** Turn the control dial to select the desired mode, and press the dial. If you want to change the other modes, repeat steps 3 and 4. If you want to change the other items, select ⮌ RETURN and press the dial, then repeat steps from 2 to 4.
**(5)** Press MENU or select ⮌ icon to erase the menu display.

Вы можете изменять установки режимов в системе меню для большего наслаждения особенностями и функциями видеокамеры.
**(1)** Нажмите MENU для отображения меню.
**(2)** Поверните регулировочный диск выбора пиктограммы с левой стороны меню, а затем нажмите диск.
**(3)** Поверните регулировочный диск для выбора желаемой установки, а затем нажмите диск.
**(4)** Поверните регулировочный диск для выбора желаемого режима, а затем нажмите диск. Если Вы хотите изменить другие режимы, повторите пункты 3 и 4. Если Вы хотите изменить другие установки выберите ⮌ RETURN и нажмите диск, а затем повторите пункты 2 – 4.
**(5)** Нажмите MENU или выберите пиктограмму ⮌ для стирания дисплея меню.

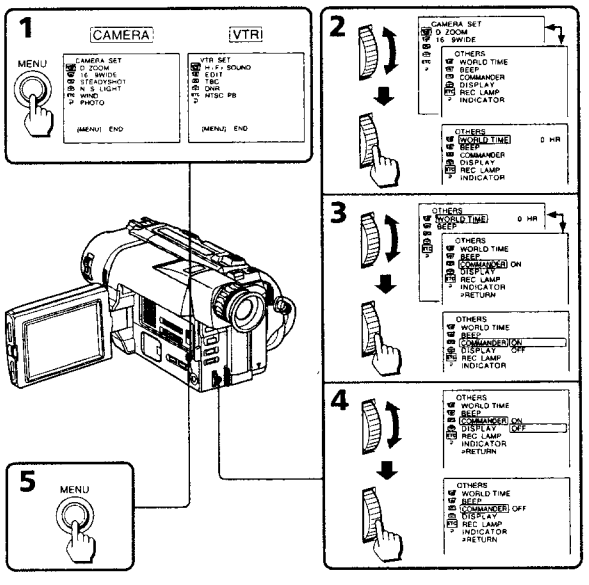

**Note on the menu display**
Depending on the model of your camcorder, the menu display may be different from that in this illustration.

**Notes on changing the mode setting**
- Menu items differ depending on the setting of the POWER switch to VTR or CAMERA.
- When you let the subject monitor the shot (mirror mode), the menu display does not appear.

## Selecting the mode setting of each item

### Items for both CAMERA and VTR modes

**LCD B. L.* <BRT NORMAL/BRIGHT>**
- Normally select BRT NORMAL.
- Select BRIGHT when the LCD screen is dark.

When you select BRIGHT, battery life is about 10 percent shorter during recording.
When you use the power sources other than the battery pack, BRIGHT is automatically selected, and LCD B.L. is not displayed in the menu.

**LCD COLOUR***
Select this item to adjust the colour on the LCD screen.

**REC MODE* <SP/LP>**
- Select SP when recording in SP (standard play) mode.
- Select LP when recording in LP (long play) mode.

When a tape recorded on this camcorder in LP mode is played back on other types of 8mm camcorders or VCRs, the playback quality may not be as good as that on this camcorder.

**Примечание к дисплею меню**
В зависимости от модели Вашей видеокамеры дисплей меню может отличаться от описанного в данной инструкции по эксплуатации.

**Примечания к изменению установок режимов**
- Установки меню отличаются в зависимости от нахождения выключателя POWER в положении VTR или CAMERA.
- Когда Вы даете снимаемому человеку наблюдать съемку (зеркальный режим) дисплей меню появляться не будет.

## Выбор режима каждой установки

### Установки для режимов и CAMERA и VTR

**LCD B.L.* <BRT NORMAL/BRIGHT>**
- Обычно выбирайте BRT NORMAL.
- Выберите BRIGHT, если экран ЖКД будет темный.

Если Вы выбираете BRIGHT, срок службы заряда батарейного блока будет приблизительно на 10 процентов короче во время записи.
Если Вы используете источник питания отличный от батарейного блока, BRIGHT выбирается автоматически и установка LCD B.L. не отображается в меню.

**LCD COLOUR***
Выберите данную установку для регулировки цвета на экране ЖКД.

**REC MODE* <SP/LP>**
- Выберите SP при записи в режиме SP (стандартного воспроизведения).
- Выберите LP при записи в режиме LP (удлиненного воспроизведения).

Когда лента, записанная на данной видеокамере в режиме LP, воспроизводится на других типах 8 мм видеокамер или КВМ, качество воспроизведения может быть не таким хорошим, как при воспроизведении на данной видеокамере.







**REMAIN* <AUTO/ON>**
- Select AUTO when you want to display the remaining tape bar.
  - for about 8 seconds after the camcorder is turned on and calculates the remainder of the tape.
  - for about 8 seconds after a cassette is inserted and the camcorder calculates the remainder of the tape.
  - for about 8 seconds after ► is pressed in VTR mode.
  - for about 8 seconds after DISPLAY is pressed to display the screen indicator.
  - for the period of tape rewinding, forwarding or picture search in VTR mode.
- Select ON to always display the remaining tape indicator.

**LTR SIZE* <NORMAL/2x>**
- Normally select NORMAL.
- Select 2x to display selected menu item by twice size of normal.

**BEEP* <ON/OFF>**
- Select ON so that beeps sound when you start/stop recording, etc.
- Select OFF when you do not want to hear the beep sound.

**COMMANDER <ON/OFF>**
- Select ON when using the supplied Remote Commander for the camcorder.
- Select OFF when not using the Remote Commander.

**DISPLAY* <LCD or V-OUT/LCD>**
- Normally select LCD. The display appears on the LCD screen.
- Select V-OUT/LCD to show the display both on the TV screen and LCD screen.

**INDICATOR* <BL ON/BL OFF>**
- Select BL ON to light up the display window.
- Select BL OFF to turn off the back light of display window.

When you use the AC power adaptor as a power source, this item is not displayed in the menu.

**REMAIN* <AUTO/ON>**
- Выберите AUTO, если Вы хотите отобразить шкалу оставшейся ленты
  - приблизительно через 8 секунд после включения видеокамеры и вычисления остатка ленты.
  - приблизительно через 8 секунд после установки кассеты и вычисления видеокамерой остатка ленты.
  - приблизительно через 8 секунд после нажатия ► в режиме VTR.
  - приблизительно через 8 секунд после нажатия DISPLAY для отображения индикации на экране.
  - на период ускоренной перемотки ленты назад, вперед или поиска изображения в режиме VTR.
- Выберите ON для постоянного отображения индикатора оставшейся ленты.

**LTR SIZE* <NORMAL/2x>**
- Обычно выбирайте NORMAL.
- Выберите 2x для отображения выбранной установки меню в два раз больше нормального размера.

**BEEP* <ON/OFF>**
- Выберите ON, чтобы зуммерные сигналы звучали, когда Вы начинаете/останавливаете запись и т.д.
- Выберите OFF, если Вы не хотите слышать зуммерный звуковой сигнал.

**COMMANDER <ON/OFF>**
- Выбирайте ON при использовании прилагаемого к видеокамере пульта дистанционного управления.
- Выберите OFF, если пульт дистанционного управления не используется.

**DISPLAY <LCD или V-OUT/LCD>**
- Обычно выбирайте LCD. Дисплей появляется на экране ЖКД.
- Выберите V-OUT/LCD для отображения индикаторов и на экране ЖКД и на экране телевизора.

**INDICATOR* <BL ON/BL OFF>**
- Выберите BL ON для подсвечивания окошка дисплея.
- Выберите BL OFF для выключения задней подсветки окошка дисплея.

Когда Вы используете сетевой адаптер переменного тока, данная установка не отображается в меню.





### Items for CAMERA mode only

**D ZOOM* <ON/OFF>**
- Select ON to activate digital zooming.
- Select OFF to not use the digital zoom. The camcorder goes back to 18x zoom.

**16:9WIDE* <OFF/CINEMA/16:9FULL>**
- Normally select OFF.
- Select CINEMA to record in CINEMA mode.
- Select 16:9FULL to record in 16:9FULL mode.

**STEADYSHOT* <ON/OFF>**
- Normally select ON.
- Select OFF to release the Steady Shot function.

**N.S.LIGHT* <ON/OFF>**
- Normally select ON.
- Select OFF to not use the NightShot Light function.

**WIND <ON/OFF>**
- Select ON to reduce wind noise when recording in strong wind.
- Normally select OFF.

**PHOTO* <NORMAL/FADE/SHUTTER> (CCD-TRV55E only)**
- Normally select NORMAL.
- Select FADE to activate the Fade Photo function.
- Select SHUTTER to activate the Shutter Photo function.

**ORC TO SET***
Select this item to automatically adjust the recording condition to get the best possible recording.
If you have already performed this function, "ORC ON" is displayed.

**CLOCK SET***
Reset the date or time.

### Установки только для режима CAMERA

**D ZOOM * <ON/OFF>**
- Выберите ON для активизации цифровой трансфокации.
- Выберите OFF при неиспользовании цифровой трансфокации. Видеокамера возвращается или 18-кратной трансфокации.

**16:9WIDE* <OFF/CINEMA/16:9FULL>**
- Обычно выбирайте OFF.
- Выберите CINEMA для записи в режиме CINEMA.
- Выберите 16:9FULL для записи в режиме 16:9FULL.

**STEADYSHOT* <ON/OFF>**
- Обычно выбирайте ON.
- Выбирайте OFF для отключения функции устойчивой съемки.

**N.S.LIGHT* <ON/OFF>**
- Обычно выбирайте ON.
- Выберите OFF при неиспользовании функции освещения ночной съемки.

**WIND <ON/OFF>**
- Выберите ON для уменьшения шума ветра при записи на сильном ветру.
- Обычно выбирайте OFF.

**PHOTO* <NORMAL/FADE/SHUTTER> (Только CCD-TRV55E)**
- Обычно выбирайте NORMAL
- Выберите FADE для активизации фотофункции введения/выведения изображения.
- Выберите SHUTTER для активизации фотофункции затвора.

**ORC TO SET***
Выберите данную установку для автоматической регулировки условий записи для получения по возможности наилучшей записи.
Если Вы уже задействовали эту функцию, то будет отображаться "ORC ON".

**CLOCK SET***
Выберите эту установку для переустановки даты или времени.







**AUTO DATE* <ON/OFF>**
- Select ON to record the date for 10 seconds after recording has started.
- Select OFF to not record the date.

**DEMO MODE* <ON/OFF>**
- Select ON to make the demonstration appear.
- Select OFF to deactivate the demonstration mode.

**Notes on DEMO MODE**
- DEMO MODE is set to STBY (Standby) at the factory and the demonstration starts about 10 minutes after you set the POWER switch to CAMERA without inserting a cassette.
  Note that you cannot select STBY of DEMO MODE in the menu system.
- You cannot select DEMO MODE when a cassette is inserted in the camcorder.
- If you insert a cassette during the demonstration, the demonstration stops. You can start recording as usual. DEMO MODE automatically returns to STBY.
- When NIGHTSHOT is set to ON, "NIGHTSHOT" appears in the viewfinder or on the LCD screen and you cannot select DEMO MODE.

**To look at the demonstration at once**
Eject the cassette, if inserted. Select ON of DEMO MODE and erase the menu display. The demonstration will begin.
When you turn off the camcorder once, DEMO MODE automatically returns to STBY.

**WORLD TIME***
Select this item to set the clock by a time difference.

**REC LAMP* <ON/OFF>**
- Select OFF when you do not want the camera recording/battery lamp at the front of the unit to light up.
- Normally select ON.

**AUTO DATE* <ON/OFF>**
- Выберите ON для записи даты в течение 10 секунд после начала записи.
- Выберите OFF, чтобы дата не записывалась.

**DEMO MODE* <ON/OFF>**
- Выберите ON для появления демонстрации.
- Выберите OFF для отключения функции демонстрации.

**Примечания к DEMO MODE**
- DEMO MODE устанавливается на заводе на STBY (готовность) и демонстрация начинается приблизительно через 10 минут после установки выключателя POWER в положение CAMERA без вставки кассеты.
  Заметьте, что Вы не можете выбирать STBY для режима DEMO MODE в системе меню.
- Вы не можете выбрать DEMO MODE, если кассета вставлена в видеокамеру.
- Если Вы вставите кассету во время демонстрации, то демонстрация прекращается. Вы можете начать запись, как обычно. DEMO MODE автоматически возвращается к STBY.
- Если индикация NIGHTSHOT установлена в положение ON, "NIGHTSHOT" появляется в видоискателе или на экране ЖКД и Вы не сможете выбрать DEMO MODE.

**Для безотлагательного просмотра демонстрации**
Вытолкните кассету, если она вставлена. Выберите ON в установке DEMO MODE и сотрите дисплей меню. Начинается демонстрация.
Когды Вы выключите видеокамеру DEMO MODE автоматически возвращается к STBY.

**WORLD TIME***
Выберите данную функцию для установки часов по разнице во времени.

**REC LAMP* <ON/OFF>**
- Выберите OFF, если Вы не хотите, чтобы загоралась лампочка записи камерой/батареи на передней панели аппарата.
- Обычно выбирайте ON.

## Changing the mode settings

### Items for VTR mode only

**HiFi SOUND <STEREO/1/2>**
- Normally select STEREO.
- Select 1 or 2 to play back a dual sound track tape.

**EDIT <ON/OFF>**
- Select ON to minimize picture deterioration when editing.
- Normally select OFF.

**TBC* <ON/OFF> (CCD-TRV55E only)**
- Normally select ON to correct for jitter.
- Select OFF to not correct for jitter. The picture may not be steady when played back.

**Note on TBC setting**

Set TBC to OFF when:
- playing back a tape you have dubbed over.
- playing back a tape on which you recorded the signal of a TV game or similar machine.
- The playback picture fluctuates.

**DNR* <ON/OFF> (CCD-TRV55E only)**
- Normally select ON to reduce picture noise.
- Select OFF if the picture has a lot of movement, causing a conspicuous afterimage.

**NTSC PB* <ON PAL TV/NTSC 4.43>**
- Normally select ON PAL TV.
- Select NTSC 4.43 if your TV has the NTSC 4.43 system when playing back a tape recorded in the NTSC colour system.
- When you play back on a Multi System TV, select the best mode while watching the picture on the TV.

**The following settings work only during playback**

EDIT, HiFi SOUND, TBC, and DNR.

* These settings are retained even when the power cord is removed, as long as the lithium battery is in place.

## Изменение установок режимов

### Установки только для режима VTR

**HiFi SOUND <STEREO/1/2>**
- Обычно выбирайте STEREO.
- Выберите 1 или 2 для воспроизведения ленты с двойной звуковой дорожкой.

**EDIT <ON/OFF>**
- Выберите ON для сведения помех к минимуму во время монтажа.
- Обычно выбирайте OFF.

**TBC* <ON/OFF> (Только CCD-TRV55E)**
- Обычно выбирайте ON для коррекции дрожания.
- Выберите OFF для отмены коррекции. Изображение может быть не устойчивым при воспроизведении.

**Примечания к установке TBC**

Установите TBC на OFF, когда:
- Воспроизводится лента, которую Вы перезаписали.
- Воспроизводится лента, на которую Вы записали сигналы телеигры или подобного компьютерного устройства.
- Воспроизводимое изображение колеблется.

**DNR* <ON/OFF> (Только CCD-TRV55E)**
- Обычно выбирайте ON для снижения помех на изображении.
- Выберите OFF, если изображение содержит множество движений, вызывая заметные послеизображения.

**NTSC PB* <ON PAL TV/NTSC 4.43>**
- Обычно вибирайте ON PAL TV.
- Выберите NTSC 4.43 при воспроизведении ленты, записанной в системе цветного телевидения NTSC, если в Вашем телевизоре имеется режим NTSC 4.43. Если Вы воспроизводите на мультисистемном телевизоре, то выберите наилучший режим во время просмотра изображения на экране телевизора.

**Следующие устновки работают только во время воспроизведения**

EDIT, HiFi SOUND, TBC и DNR.

* Эти установки остаются в силе даже при снятии батарейного блока до тех пор, пока литиевая батарейка находится на месте.





## Shooting with backlighting

When you shoot a subject with the light source behind the subject or a subject with a light background, use the BACK LIGHT function.

Press BACK LIGHT. The ▣ indicator appears in the viewfinder or on the LCD screen.

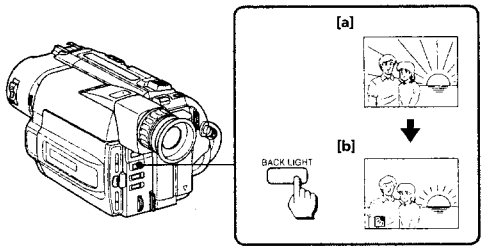


[a] Subject is too dark because of backlight.
[b] Subject becomes bright with backlight compensation.

### After shooting

Be sure to release this adjustment condition by pressing BACK LIGHT again. The ▣ indicator disappears. Otherwise, the picture will be too bright under normal lighting condition.

**This function is also effective under the following conditions:**
- A subject with a light source nearby or a mirror reflecting light
- A white subject against a white background. Especially when you shoot a person wearing shiny clothes made of silk or synthetic fiber, his or her face tends to become dark if you do not use this function.

### To make a fine adjustment

You can adjust the exposure manually. However, when you adjust the exposure manually, BACK LIGHT does not operate.

## Съемка с задней подсветкой

Когда Вы снимаете объект с источником света позади объекта или объект на освещенном фоне, используйте функцию BACK LIGHT.

Нажмите BACK LIGHT. Индикатор ▣ появляется в видоискателе или на экране ЖКД.

[a] Объект является слишком темным из-за задней подсветки.
[b] Объект становится ярким с помощью компенсации задней подсветки.

### После съемки

Не забудьте отключить состояние этой регулировки путем нажатия BACK LIGHT снова. Индикатор ▣ исчезнет. В противном случае изображение будет слишком ярким в условиях нормального освещения.

**Данная функция является эффективной в следующих условиях:**
- Для объекта, расположенного рядом с источником света или зеркалом отражающим свет.
- Белый объект на белом фоне. Особенно, когда Вы снимаете человека в блестящей одежде из шелка или синтетического волокна, его или ее лицо может стать темным, если Вы не будете использовать данную функцию.

### Для выполнения точной регулировки

Вы можете отрегулировать экспозицию вручную. Однако, когда Вы регулируете экспозицию вручную, функция BACK LIGHT не будет работать.

## Using the FADER function

### Selecting the fader function

Fade in or out to give your recording a professional appearance.
When the picture fades in, the sound gradually increases. When the picture fades out, the sound gradually decreases.

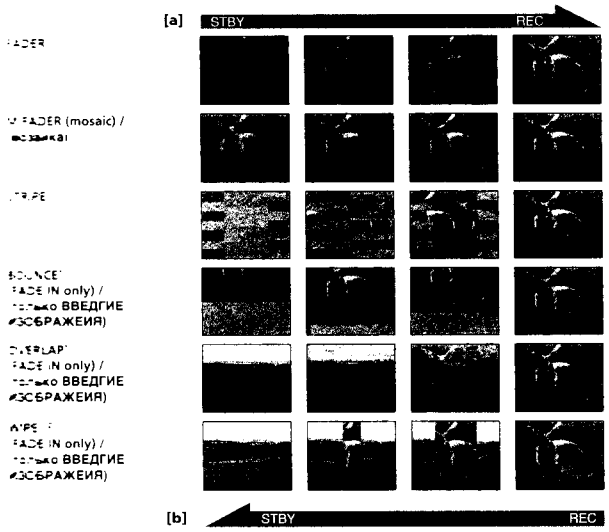


**MONOTONE**

When fading in, the picture gradually changes from black and white to colour.
When fading out, the picture gradually changes from colour to black and white.

WIPE

The picture seems to wipe away.

## Использование фунции FADER

### Выбор функции введения/выведения изображения

Вы можете плавно вводить или выводить изображение, придавая Вашей записи профессиональный вид.
Если изображение постепенно вводится, звук постепенно увеличивается. Если изображение постепенно выводится, звук постепенно уменьшается.

**MONOTONE**

При введении изображение постепенно изменяется от черно-белого до цветного. При выведении изображение постепенно изменяется от цветного до черно-белого.

[1] Только CCD-TRV55E
[2] Звук выводится не будет.





## Using the FADER function

### Using the fader function

**When fading in [a]**

(1) While the camcorder is in Standby mode, press FADER until the desired fade indicator flashes.
(2) Press START/STOP to start recording. The fade indicator stops flashing.

**When fading out [b]**

(1) During recording, press FADER until the desired fade indicator flashes.
(2) Press START/STOP to stop recording. The fade indicator stops flashing, and then recording stops.

The fading mode selected last is indicated first of all.

**Note on the bounce function**

When you use the following functions or D ZOOM is set to ON in the menu system, "BOUNCE" indicator does not appear.
- Wide mode
- Functions using the PICTURE EFFECT button
- Functions using the PROGRAM AE button

## Использование фунции FADER

### Использование функции введения/выведения изображения

**Для введения изображения [a]**

(1) Когда видеокамера находится в режиме готовности нажимайте FADER до тех пор, пока желаемый индикатор введения/выведения не начнет мигать.
(2) Нажмите START/STOP для начала записи. Индикатор введения/выведения перестает мигать.

**Для выведения изображения [b]**

(1) Во время записи нажимайте FADER до тех пор, пока желаемый индикатор введения/выведения не начнет мигать.
(2) Нажмите START/STOP для остановки записи. Индикатор введения/выведения перестает мигать и запись останавливается.

Режим введения/выведения, который был выбран последним, указывается прежде всего.

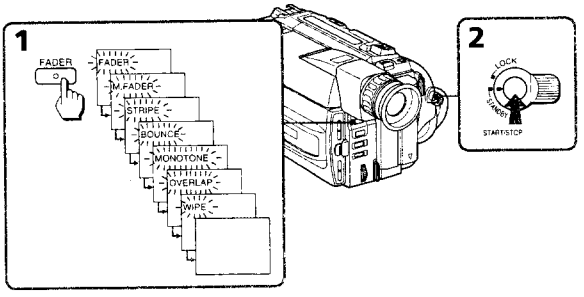


**Примечание к функции изменения размеров изображения**

Если Вы используете следующие функции или же индикатор D ZOOM установлен в положение ON в системе меню, индикатор "BOUNCE" появляться не будет.
- Широкоформатный режим
- Функции с использованием кнопки PICTURE EFFECT
- Функции с использованием кнопки PROGRAM AE

## Using the FADER function

## Использование фунции FADER

**To cancel the fader function**
Before pressing START/STOP, press FADER until the indicator disappears.

**When the date, time or title is displayed**
The date, time and title do not fade in or fade out.

**When the START/STOP MODE switch is set to 5SEC or ⏚**
You cannot use the fader function.

**Notes on the fader function**
- While using the bounce function, you cannot use the following functions.
  - Exposure
  - Focus
  - Zoom
- You cannot use the following functions while using the fader function. Also, while using the following functions you cannot use the fader function (CCD-TRV55E only)
  - Functions using the DIGITAL EFFECT button
  - Low Lux mode of PROGRAM AE (overlap/wipe function only)
- If you do not record anything before operating the wipe or overlap function, the camcorder memorizes the image on the tape. As the image is being memorized, the WIPE or OVERLAP indicator flashes quickly, and the picture you are shooting disappears from the viewfinder. Depending on the tape condition, the picture may not be recorded clearly (CCD-TRV55E only).

**Для отмены функции введения/выведения изображения**
Перед нажатием START/STOP нажимайте FADER до тех пор, пока индикатор не исчезнет.

**Когда отображается дата, время или надпись**
Дата, время и надпись не вводятся и не выводятся.

**Когда переключатель START/STOP MODE установлен в положение 5SEC или ⏚**
Вы не сможете использовать функцию введения/выведения изображения.

**Примечания к функции введения/выведения изображения**
- Во время использования функции изменения размеров изображения Вы не можете использовать следующие фчнкции.
  - Экспозиция
  - Фокусировка
  - Трансфокация
- Вы не можете использовать следующие функции во время использования функции введения/выведения изображения. Также во время использования следующих функций Вы не можете использовать функцию введения/выведения изображения. (только CCD-TRV55E)
  - Функции с использованием кнопки DIGITAL EFFECT
  - Режим низкого освещения функции PROGRAM AE (только функция наложения/вытеснения шторкой)
- Если Вы ничего не записали перед использованием функции вытеснения шторкой или наложения, видеокамера запоминает изображение на ленте. Когда изображение будет запомнено, индикатор WIPE или OVERLAP будет мигать быстро, и изображение, которое Вы записываете, исчезает из видоискателя. В зависимости от состояния ленты изображение может быть записано не четко (только CCD-TRV55E).

Advanced operations Усовершенствованные операции

## Shooting in the dark (NightShot)

## Съемка в темных условиях (Ночная съемка)

The NightShot function enables you to shoot a subject in a dark place. You can achieve a satisfactory recording of the ecology of nocturnal animals for observation with this function. This function may record picture nearly in monochrome.

Функция ночной съемки позволяет Вам производить съемку объекта в темном месте. Вы можете получить удовлетворительную запись жизни ночных животных при использовании данной функции. Данная функция может осуществлять запись изображения близкого к монохромному.

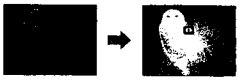

(1) While the camcorder is in Standby mode, slide NIGHTSHOT to ON.
(2) Press START/STOP to start recording. ⏺ and "NIGHTSHOT" indicators flash.

(1) Когда видеокамера находится в режиме готовности передвиньте NIGHTSHOT в положение ON.
(2) Нажмите START/STOP для начала записи. Индикаторы ⏺ и "NIGHTSHOT" начинают мигать.

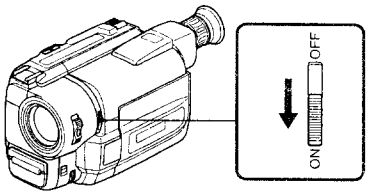


**To cancel the NightShot function**
Slide NIGHTSHOT to OFF.

**Для отмены функции ночной съемки**
Передвиньте NIGHTSHOT в положение OFF.

**Using the N.S.Light**
When you set N.S.LIGHT to ON in the menu system, the picture will be more clear.
The maximum limit of NightShot Light is about 3 meters (about 10 feet).

**Использование освещения N.S.**
Когда функция N.S.LIGHT установлена на ON в системе меню, изображение будет более четким.
Максимальный предел освещения в режиме ночной съемки достигает 3 метров.

**Notes on the NightShot**
- When you keep setting NIGHTSHOT to ON in normal recording, picture may be recorded in incorrect/unnatural colour.
- If focusing is difficult with the autofocus mode when using the NightShot function, focus manually.

**Примечания к ночной съемке**
- Когда Вы оставляете NIGHTSHOT в положении ON при нормальной записи, изображение может быть записано в неправильном/неестественном цвете.
- Если фокусировка будет затруднена в режиме автоматической фокусировки во время использования функции ночной съемки, то выполняйте фокусировку вручную.



## Photo recording

## Запись фотографий

**– CCD-TRV55E only**
You can record a still picture like a photograph for about seven seconds. This mode is useful when you want to enjoy a picture such as a photograph or when you print a picture using a video printer (not supplied).
We recommend you to use the video flash light (not supplied) when shooting in the dark. Attach the video flash light to the intelligent accessory shoe. When ϟ appears, the video flash lights ready for flashing.
You can also select the photo mode (NORMAL, FADE, SHUTTER) in the menu system (p. 32).

**– Только CCD-TRV55E**
Вы можете записывать неподвижное изображение, как фотографию приблизительно в течение семи секунд. Этот режим является очень полезным, когда Вы хотите наслаждаться изображением похожим на фотографию, или когда Вы делаете распечатку изображений, используя видеопринтер (не прилагается).
Мы рекомендуем Вам использовать лампу-вспышку (не прилагается) при съемке в темных условиях. Прикрепите лампу-вспышку к башмаку для установки вспомогательного оборудования. Когда появится ϟ, лампа-вспышка готова к работе.
Вы также можете выбрать фоторежим (NORMAL, FADE, SHUTTER) в системе меню (стр. 32).

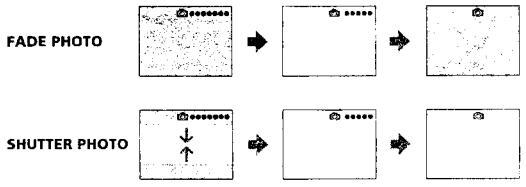


(1) While the camcorder is standby mode, keep pressing PHOTO lightly until a still picture appears. CAPTURE appears.
To change the still picture, release PHOTO, select a still picture again, and then press and hold PHOTO lightly.
(2) Press PHOTO deeper.
The still picture in the viewfinder or on the LCD screen is recorded for about seven seconds. The sound during those seven seconds is also recorded.
To record a still picture while normal recording, press PHOTO deeper. Then the still picture is recorded for about seven seconds and the camcorder returns to Standby mode.

(1) Когда видеокамера находится в режиме готовности, придерживайте слегка нажатой кнопку PHOTO до тех пор, пока не появится неподвижное изображение. Так же появится CAPTURE.
Для изменения неподвижного изображения отпустите PHOTO, снова выберите другое неподвижное изображение, а затем придерживайте слегка нажатой кнопку PHOTO.
(2) Нажмите PHOTO глубже.
Неподвижное изображение в видоискателе будет записываться приблизительно в течение семи секунд. Звук в течение этих семи секунд также будет записываться.
Для записи неподвижного изображения во время обычной съемки нажмите кнопку PHOTO глубже. Затем неподвижное изображение будет записываться примерно семь секунд и видеокамера вернется в режим готовности.

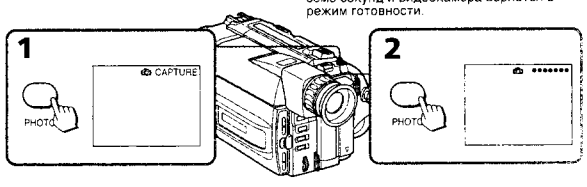


Advanced operations Усовершенствованные операции



## Photo recording

## Запись фотографий

**Notes on photo recording**
- During photo recording, you cannot change the mode or setting of following functions.
  - Functions using the DIGITAL EFFECT button
  - Functions using the FADER button
  - Functions using the PROGRAM AE button
  - Functions using the PICTURE EFFECT button
  - Exposure
  - Wide mode
- The PHOTO button does not work
  - while the DIGITAL EFFECT function is set or in use.
  - while the FADER function is in use.
- When recording a still picture, do not shake the camcorder. The picture may fluctuate.
- When ϟ flashes, the appropriate brightness may not be obtained.
- When you start Photo recording from normal camera recording, the video flash light does not work (ϟ does not appear).

**Примечания к записи фотографий**
- Во время записи фотографий, Вы не можете изменять режим или установку следующих функций.
  - Функции с использованием кнопки DIGITAL EFFECT
  - Функции с использованием кнопки FADER
  - Функции с использованием кнопки PROGRAM AE
  - Функции с использованием кнопки PICTURE EFFECT
  - Экспозиция
  - Широкоформатный режим
- Кнопка PHOTO не работает
  - во время установки или использования функции DIGITAL EFFECT.
  - во время использования функции FADER.
- При записи неподжиного изображения не допускайте дрожания видеокамеры. Изображение может колебаться.
- Когда ϟ будет мигать, надлежащая яркость может быть не получена.
- Когда Вы начинаете запись фотографий из режима нормальной записи камерой, лампа-вспышка не будет работать (ϟ появляться не будет).

# Using the wide mode function

## Selecting the desired mode

... to record a cinemalike picture (CINEMA)
... mode picture to watch on the 16:9 wide-
... TV (16:9 FULL).

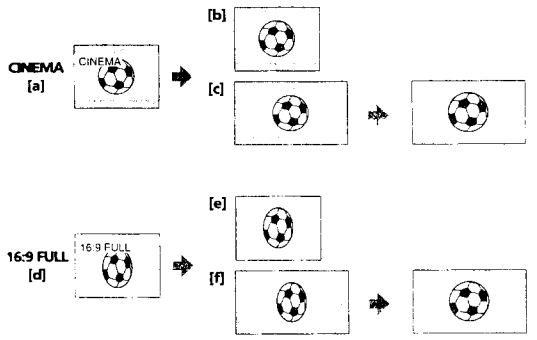


**CINEMA**

... appear at the top and the bottom of ... and the viewfinder or LCD screen **[a]** ... normal TV screen **[b]** look wide. You can ... picture without black bands on a ... TV **[c]**.

**16:9 FULL**

... picture on the viewfinder or LCD screen **[d]** ... TV **[e]** is horizontally ... You can watch the picture of ... images on a wide-screen TV **[f]**.

# Использование функции широкоформатного режима

## Выбор желаемого режима

Вы можете записывать изображение как в кинотеатре (CINEMA) или широкоформатное изображение 16:9 для просмотра на широкоэкранном телевизоре формата 16:9 (16:9 FULL).

**CINEMA**

Черные полосы появляются сверху и снизу экрана, и экран ЖКД **[a]** и нормальный экран телевизора выглядят широкими **[b]**. Вы также можете просмотреть изображение без черных полос на широкоэкранном телевизоре **[c]**.

**16:9 FULL**

Изображение на экране ЖКД **[d]** или на обычном телевизоре **[e]** сжато по горизонтали. Вы можете просмотреть нормальное изображение на широкоэкранном телевизоре **[f]**.

Advanced operations

Усовершенствованные операции





## Using the wide mode function

You can select the wide mode (OFF, CINEMA, 16:9FULL) in the menu system (p. 32).

### To cancel wide mode

Select OFF in the menu system.

### To watch the tape recorded in wide mode

To watch the tape recorded in CINEMA mode, set the screen mode of the wide-screen TV to zoom mode. To watch the tape recorded in 16:9 FULL mode, set it to full mode. For details, refer to the instruction manual of your TV.
Note that the picture recorded in 16:9 FULL mode looks compressed on a normal TV.

### Notes on wide mode

- If wide mode is set to 16:9 FULL, the Steady Shot function does not work and the ☜ indicator flashes.
- In wide mode, you cannot select the old movie function with DIGITAL EFFECT (CCD-TRV55E only) and the bounce function with FADER.
- When you record in 16:9 FULL mode, the date or time indicator will be widened on the wide-screen TV.
- If you dub a tape, the tape is copied in the same mode as the original recording.
- The wide mode is cancelled automatically 5 minutes after you remove the power source.
- When recording, you cannot change the mode.

## Использование функции широкоформатного режима

Вы можете выбрать широкоформатный режим (OFF, CINEMA, 16:9FULL) в системе меню. (стр. 32)

### Для отмены режима

Выберите OFF в системе меню.

### Для просмотра ленты, записанной в широкоформатном режиме

Для просмотра ленты записанной в режиме CINEMA установите режим экрана на широкоэкранного телевизора на режим масштабирования. Для просмотра ленты записанной в режиме 16:9 FULL установите его на полноэкранный режим. Подробности смотрите в инструкции по эксплуатации Вашего телевизора.
Заметьте, что изображение, записанное в режиме 16:9 FULL, выглядит сжатым на обычном телевизоре.

### Примечания к широкоформатному режиму

- Если широкоформатный режим установлен на 16:9 FULL, то функция устойчивой съемки работать не будет, а индикатор ☜ будет мигать.
- В широкоформатном режиме Вы не можете выбрать функцию старинного фильма с помощью DIGITAL EFFECT (только CCD-TRV55E) и функцию изменения размеров изображения с помощью FADER.
- При записи в режиме 16:9 FULL индикатор даты или времени будет расширенным на широкоэкранном телевизоре.
- Если Вы осуществляете перезапись ленты, то лента будет записываться в таком режиме, как и исходная лента.
- Широкоформатный режим будет автоматически отменен через 5 минут после снятия источника питания.
- Во время записи Вы не можете изменить режим.

# Using the PROGRAM AE function

## Selecting the best mode

... select one of six (CCD-TRV45E) or seven ... TRV55E) PROGRAM AE (Auto Exposure) ... your shooting situation, referring ... following.

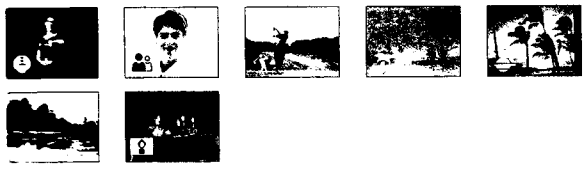

- **Spotlight mode**
  ... subjects in spotlight, such as at the theatre or ... event.
- **Soft Portrait mode**
  ... in on a still subject in telephoto ... a subject behind an obstacle such as ... creates a soft background for subjects ... people or flowers, and faithfully ... reproduces skin colour.
- **Sports Lesson mode**
  ... recording fast-moving subjects such as in ... golf games.
- **Beach & Ski mode**
  ... faces in strong light or reflected ... such as at a beach in midsummer or on a ... slope.
- **Sunset & Moon mode**
  ... recording subjects in dark environments such ... fireworks, neon signs, or general night ... view.
- **Landscape mode**
  ... distant subjects such as mountains or when ... a subject behind an obstacle such as a ... net or screen.
- **Low Lux mode (CCD-TRV55E only)**
  ... recording a subject in insufficient light. ... becomes bright.

## Выбор наилучшего режима

Вы можете выбрать один из шести (CCD-TRV45E) или из семи (CCD-TRV55E) режимов PROGRAM AE (автоматической экспозиции), который подходит для съемки в Вашей ситуации, сверяясь со следующими описаниями.

- **Режим прожекторного освещения**
  Для записи объекта под прожекторным освещением, как например, в театре или на официальном приеме.
- **Мягкий портретный режим**
  Для выполнения наезда видеокамеры на неподвижный объект в режиме телефото или для записи объекта, находящегося за преградой, например, за сеткой. Создает мягкий фон для таких объектов, как люди или цветы, и четко воспроизводит телесный цвет.
- **Режим спортивных занятий**
  Для съемки быстродвигающихся объектов, как например, в играх в теннис или гольф.
- **Пляжный и лыжный режим**
  Для записи людей или лиц, находящихся под сильным освещением или отраженным светом, как например, на пляже летом или на снежном склоне.
- **Режим захода солнца и луны**
  Для записи объектов в темных условиях, как например, заход солнца, фейерверки, неоновые рекламы или общие ночные пейзажи.
- **Ландшафтный режим**
  Для записи удаленных объектов, таких как горы, или при записи объекта за преградой, как например, за окном или сеткой.
- **Режим низкого освещения (только CCD-TRV55E)**
  Для записи объекта при недостаточном освещении. Объект делается ярким.

Advanced operations

Усовершенствованные операции





## Using the PROGRAM AE function

(1) Press PROGRAM AE.
(2) Turn the control dial to select the desired PROGRAM AE mode.

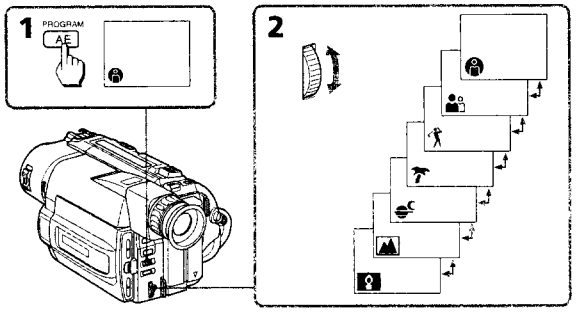


### To turn off program AE

Press PROGRAM AE.

### Notes on focus setting

- In the Spotlight, Sports lesson and Beach & Ski modes, you cannot take close-ups because the camcorder is set to focus only on subjects in the middle to far distance.
- In the Sunset & Moon and Landscape modes, the camcorder is set to focus only on distant subjects.

### Notes on PROGRAM AE

– CCD-TRV55E only

- The following functions do not work during PROGRAM AE mode
  - Slow shutter
  - Old movie
- The following functions do not work during Low Lux mode
  - Functions using the DIGITAL EFFECT button
  - Exposure

## Использование функции PROGRAM AE

(1) Нажмите PROGRAM AE.
(2) Поверните регулировочный диск для выбора желаемого режима PROGRAM AE, а затем нажмите регулировочный диск.

### Для выключения PROGRAM AE

Нажмите PROGRAM AE.

### Примечания к установке фокусировки

- В режимах прожекторного освещения, спортивных занятий, а также пляжном и лыжном режиме Вы не можете снимать крупным планом, так как видеокамера фокусируется только на объекты среднего и дальнего удаления.
- В режимах захода солнца и луны и ландшафтном видеокамера фокусируется только на удаленные объекты.

### Примечания к функции PROGRAM AE – только CCD-TRV55E

- Следующие функции не будут работать в режиме PROGRAM AE
  - Медленный затвор
  - Старинный кинофильм
- Следующие функции не будут работать в режиме низкого освещения
  - Функции с использованием кнопки DIGITAL EFFECT
  - Экспозиция

## Superimposing a still picture on a moving picture

## Наложение неподвижного изображения на движущееся изображение

**– CCD-TRV55E only**

Using the still function, you can record a still picture to be superimposed on a moving picture. The sound is recorded normally.

**(1)** While the camcorder is in Standby mode or recording mode, press DIGITAL EFFECT and turn the control dial until the STILL indicator flashes.

**(2)** Press the control dial.
The STILL indicator lights up and the still bars appear. The still picture is stored in memory.

**(3)** Turn the control dial to adjust the rate of the still picture you want to superimpose on the moving picture. The rate of the still picture increases with the number of the still bars.

**(4)** Press START/STOP to start recording a moving picture with a still picture superimposed on it. When you stop recording, press START/STOP again.

**– Только CCD-TRV55E**

Используя функцию стоп-кадра, Вы можете записать неподвижное изображение, наложив его на движущееся изображение. Звук записывается нормально.

**(1)** Когда видеокамера находится в режиме готовности или записи нажмите DIGITAL EFFECT и поворачивайте регулировочный диск до тех пор, пока индикатор STILL не будет мигать.

**(2)** Нажмите регулировочный диск.
Индикатор STILL будет гореть и появляются полосы шкалы стоп-кадра. Неподвижное изображение будет сохранено в памяти.

**(3)** Поверните регулировочный диск для регулировки частоты кадров неподвижного изображения, которое Вы хотите наложить на движущееся изображение. Частота кадров неподвижного изображения увеличивается вместе с числом полос на шкале стоп-кадра.

**(4)** Нажмите START/STOP для начала записи движущегося изображения вместе с неподвижным изображением, наложенным на него. Для остановки записи снова нажмите START/STOP.

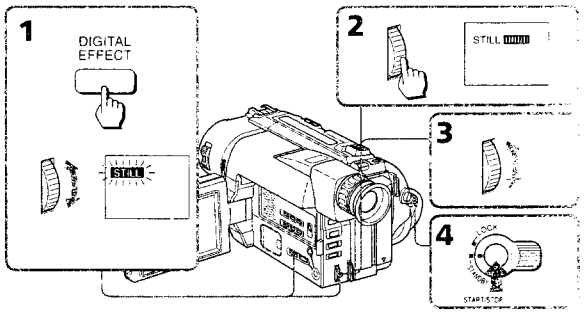


**To cancel the still function**
Press DIGITAL EFFECT.

**Notes on the still function**
- You cannot use the following functions while recording a still picture
  - Functions using the FADER button
  - Low Lux mode of PROGRAM AE
  - Functions using the PHOTO button
- When you set the POWER switch to OFF, the still function will be cancelled automatically.

**Для отмены функции стоп-кадра**
Нажмите DIGITAL EFFECT.

**Примечания к функции стоп-кадра**
- Вы не можете использовать следующие функции во время записи неподвижного изображения
  - Функции с использованием кнопки FADER
  - Режим низкой освещенности функции PROGRAM AE
  - Функции с использованием кнопки PHOTO
- Когда Вы установите выключатель POWER в положение OFF, функция стоп-кадра будет отменена автоматически.





## Recording still pictures successively

## Последовательная запись неподвижных изображений

**– CCD-TRV55E only**

Using the flash motion function, you can record still pictures successively at constant intervals. The sound is recorded normally.

**(1)** While the camcorder is in Standby mode or recording mode, press DIGITAL EFFECT and turn the control dial until the FLASH indicator flashes.

**(2)** Press the control dial.
The FLASH indicator lights up and the flash motion bars appear.

**(3)** Turn the control dial to adjust the interval of flash motion. The intervals increase with the number of the flash motion bars.

**(4)** Press START/STOP. Flash motion recording starts. When you stop recording, press START/STOP again.

**[a]** normal recording
**[b]** flash motion recording

**– Только CCD-TRV55E**

Используя функцию периодического движения, Вы можете последовательно записывать неподвижные изображения с постоянными интервалами. Звук будет записываться нормально.

**(1)** Когда видеокамера будет находиться в режиме готовности или записи, нажмите DIGITAL EFFECT и поворачивайте регулировочный диск до тех пор, пока индикатор FLASH не начнет мигать.

**(2)** Нажмите регулировочный диск.
Индикатор FLASH будет гореть, и появляются полосы шкалы периодического движения.

**(3)** Поверните регулировочный диск для регулировки интервала периодического движения. Интервал увеличивается вместе с числом полос на шкале периодического движения.

**(4)** Нажмите START/STOP. Начинается запись периодического движения. Когда Вы захотите остановить запись, снова нажмите START/STOP.

**[a]** Нормальная запись
**[b]** Периодическая запись

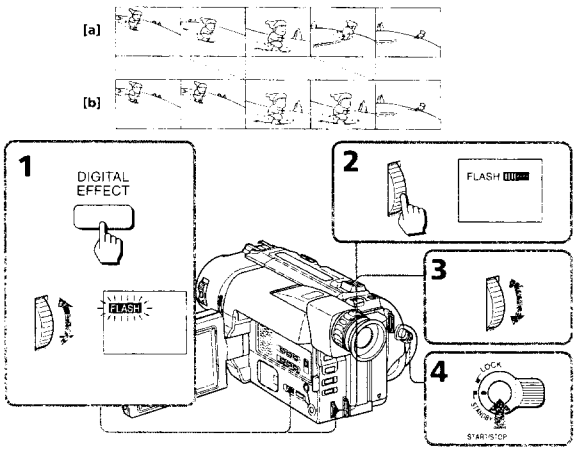




## Recording still pictures successively

## Последовательная запись неподвижных изображений

**To cancel the flash motion function**
Press DIGITAL EFFECT.

**Notes on the flash motion function**
- You cannot use the following functions during the flash motion recording
  - Functions using the FADER button
  - Low Lux mode of PROGRAM AE
  - Functions using the PHOTO button
- When you set the POWER switch to OFF, the flash motion function will be cancelled automatically.

**Для отмены периодического движения**
Нажмите DIGITAL EFFECT.

**Примечания к функции периодического движения**
- Вы не можете использовать следующие функции во время записи периодического движения
  - Функции с использованием кнопки FADER
  - Режим низкой освещенности функции PROGRAM AE
  - Функции с использованием кнопки PHOTO
- Когда Вы установите выключатель POWER в положение OFF, функция периодического движения будет отменена автоматически.





## Replacing a brighter portion of a still picture with a moving picture

## Замещение более яркой части неподвижного изображения движущимся изображением

**– CCD-TRV55E only**

Using the luminancekey function, you can replace a brighter portion of a still picture with a moving picture.
For example, you can superimpose the favorite scene on the background if you store the picture in memory as a still picture, such as a person in a bright background. The sound is recorded normally.

**– Только CCD-TRV55E**

Используя функцию яркости изображения переднего плана, Вы можете заместить часть неподвижного изображения с более яркими цветами движущимся изображением. Например, Вы можете наложить желаемую сцену на фоновый план, если Вы сохранили изображение в памяти в качестве неподвижного изображения, как например, человек на ярком фоне. Звук записывается нормально.



## Replacing a brighter portion of a still picture with a moving picture

## Замещение более яркой части неподвижного изображения движущимся изображением

**(1)** While the camcorder is in Standby mode or recording mode, press DIGITAL EFFECT and turn the control dial until the LUMI. indicator flashes.

**(2)** Press the control dial.
The LUMI. indicator lights up and the luminancekey bars appear. The still picture is stored in memory.

**(3)** Turn the control dial to adjust the colour scheme of the still picture. The rate of the still picture increases by the number of the luminancekey bars.

**(4)** Press START/STOP. Luminancekey recording starts. When you stop recording, press START/STOP again.

**[a]** still picture
**[b]** moving picture

**(1)** Когда видеокамера будет находиться в режиме готовности или в режиме записи, нажмите DIGITAL EFFECT и поворачивайте регулировочный диск до тех пор, пока индикатор LUMI не будет мигать.

**(2)** Нажмите регулировочный диск.
Индикатор LUMI будет гореть, и появляются полосы шкалы яркости изображения переднего плана. Неподвижное изображение будет сохранено в памяти.

**(3)** Поверните регулировочный диск для регулировки цветного плана неподвижного изображения. Частота кадров неподвижного изображения увеличивается вместе с числом полос на шкале яркости изображения переднего плана.

**(4)** Нажмите START/STOP. Запись яркого изображения переднего плана начинается. Когда Вы захотите остановить запись, нажмите START/STOP.

**[a]** Неподвижное изображение
**[b]** Движущееся изображение

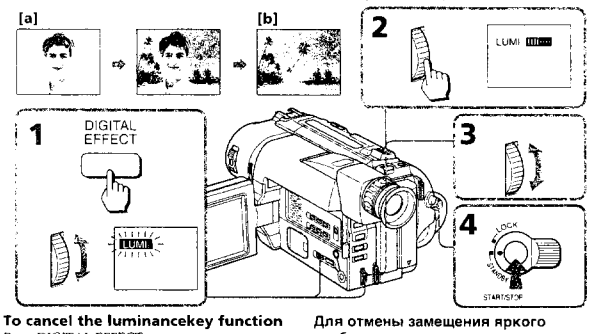


**To cancel the luminancekey function**
Press DIGITAL EFFECT.

**Notes on the luminancekey function**
- The following functions do not work during luminancekey mode.
  - Functions using the FADER button
  - Low Lux mode of PROGRAM AE
  - Functions using the PHOTO button
- When you set the POWER switch to OFF, the luminancekey function will be cancelled automatically.

**Для отмены замещения яркого изображения переднего плана**
Нажмите DIGITAL EFFECT.

**Примечания к функции яркого изображения переднего плана**
- Следующие функции не работают во время режима наложения яркого изображения переднего плана
  - Функции с использованием кнопки FADER
  - Режим низкой освещенности функции PROGRAM AE
  - Функции с использованием кнопки PHOTO
- Когда Вы установите выключатель POWER в положение OFF, функция замещения яркого изображения переднего плана будет отменена автоматически.

## Adding an incidental image to pictures

## Добавление побочного изображения к основному

**– CCD-TRV55E only**

Using the trail function, you can record the picture which leaves an incidental image, such as a trail. The sound is recorded normally. You can adjust the vanishing time of the incidental image with the control dial.

**(1)** While the camcorder is in Standby mode or recording mode, press DIGITAL EFFECT and turn the control dial until the TRAIL indicator flashes.

**(2)** Press the control dial.
The TRAIL indicator lights up and the trail bars appear.

**(3)** Turn the control dial to adjust the vanishing time of the incidental image.
The vanishing time increases with the number of the trail bars.

**– Только CCD-TRV55E**

Используя функцию запаздывания изображения, Вы можете записать изображение, которое остается в качестве побочного изображения, как, например, след. Звук записывается нормально. Вы можете отрегулировать время исчезания побочного изображения с помощью регулировочного диска.

**(1)** Когда видеокамера будет находиться в режиме готовности или в режиме записи, нажмите DIGITAL EFFECT и поворачивайте регулировочный до тех пор, пока индикатор TRAIL не будет мигать.

**(2)** Нажмите регулировочный диск.
Индикатор TRAIL будет гореть, и появляются полосы шкалы следа.

**(3)** Поверните регулировочный диск для регулировки времени исчезания побочного изображения.
Время исчезания увеличивается вместе с числом полос шкалы следа.

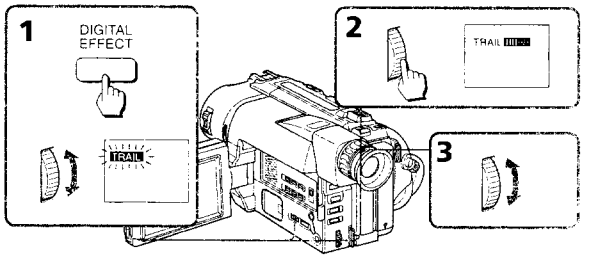


**To cancel the trail function**
Press DIGITAL EFFECT.

**Notes on the trail function**

- The following functions do not work during trail mode.
  - Functions using the FADER button
  - Low Lux mode of PROGRAM AE
  - Functions using the PHOTO button
- When you set the POWER switch to OFF, the trail function will be cancelled automatically.

**Для отмены функции запаздывания изображения**
Нажмите DIGITAL EFFECT.

**Примечания к функции запаздывания изображения**

- Следующие функции не работают во время режима запаздывания изображения.
  - Функции с использованием кнопки FADER
  - Режим низкой освещенности функции PROGRAM AE
  - Функции с использованием кнопки PHOTO
- Когда Вы установите выключатель POWER в положение OFF, функция запаздывания изображения будет отменена автоматически.





## Using slow shutter

## Использование медленного затвора

**– CCD-TRV55E only**

If you want to record a dark picture more brightly, or make the movement of the subject seem lively, set the shutter speed to 1/25, 1/12, 1/6 or 1/3 (slow shutter).

**(1)** While the camcorder is in Standby mode or recording mode, press DIGITAL EFFECT and turn the control dial until the SLOW SHTR (shutter) indicator flashes.

**(2)** Press the control dial.
The SLOW SHTR indicator lights up and the shutter speed number (1 - 4) appears.

**(3)** Turn the control dial to select the shutter speed.
As the shutter speed number becomes bigger, the shutter speed becomes slower.

| Shutter speed number | Shutter speed |
|---|---|
| SLOW SHTR 1 | 1/25 |
| SLOW SHTR 2 | 1/12 |
| SLOW SHTR 3 | 1/6 |
| SLOW SHTR 4 | 1/3 |

**– Только CCD-TRV55E**

Если Вы хотите записать темное изображение более ярким или сделать движения объекта похожими на реальную жизнь, установите скорость затвора на 1/25, 1/12, 1/6 или 1/3 (медленный затвор).

**(1)** Когда видеокамера будет находиться в режиме готовности или в режиме записи, нажмите DIGITAL EFFECT и поворачивайте регулировочный диск до тех пор, пока индикатор SLOW SHTR (затвор) не будет мигать.

**(2)** Нажмите регулировочный диск.
Индикатор SLOW SHTR будет гореть, и появляется номер скорости затвора (1 – 4).

**(3)** Поверните регулировочный диск для выбора скорости затвора.
Чем больше номер скорости затвора, тем скорость затвора медленнее.

| Номер скорости затвора | Скорость затвора |
|---|---|
| SLOW SHTR 1 | 1/25 |
| SLOW SHTR 2 | 1/12 |
| SLOW SHTR 3 | 1/6 |
| SLOW SHTR 4 | 1/3 |

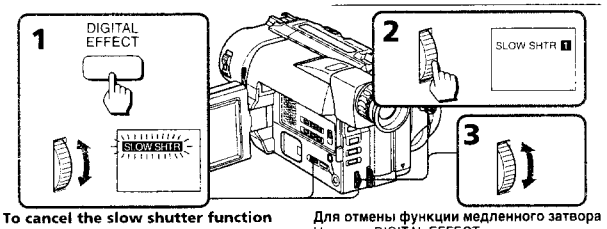


**To cancel the slow shutter function**
Press DIGITAL EFFECT.

**When recording with the slow shutter function**
Auto focus may not be effective. Focus manually using a tripod.

**Notes on the slow shutter function**

- You cannot use the following functions during recording with the slow shutter function.
  - Functions using the FADER button
  - Functions using the PROGRAM AE button
  - Exposure
  - Functions using the PHOTO button
- When you set the POWER switch to OFF, the slow shutter function will be cancelled automatically.

**Для отмены функции медленного затвора**
Нажмите DIGITAL EFFECT.

**При записи с использованием функции замедленного затвора**
Автоматическая фокусировка может быть неэффективной. Выполняйте ручную фокусировку с использованием треноги.

**Примечания к функции медленного затвора**

- Вы не можете использовать следующие функции во время записи с использованием функции медленного затвора.
  - Функции с использованием кнопки FADER
  - Функции с использованием кнопки PROGRAM AE
  - Экспозиция
  - Функции с использованием кнопки PHOTO
- Когда Вы установите выключатель POWER в положение OFF, функция медленного затвора будет отменена автоматически.



## Adding an old movie type atmosphere to pictures

## Придание изображению атмосферы старинного кинофильма

**– CCD-TRV55E only**

Using the old movie function, you can record the picture such as an old movie. The camcorder automatically sets the wide mode to CINEMA, picture effect to SEPIA, and the appropriate shutter speed.

**(1)** While the camcorder is in Standby mode or recording mode, press DIGITAL EFFECT and turn the control dial until the OLD MOVIE indicator flashes.

**(2)** Press the control dial.
The OLD MOVIE indicator lights up.

**– Только CCD-TRV55E**

Используя функцию старинного кинофильма, Вы можете записать изображение в виде старинного кинофильма. Видеокамера автоматически установит широкоформатный режим на CINEMA, эффект изображения на SEPIA и выберет надлежащую скорость затвора.

**(1)** Когда видеокамера будет находиться в режиме готовности или в режиме записи, нажмите DIGITAL EFFECT и поворачивайте регулировочный до тех пор, пока индикатор OLD MOVIE не будет мигать.

**(2)** Нажмите регулировочный диск.
Индикатор OLD MOVIE будет гореть.

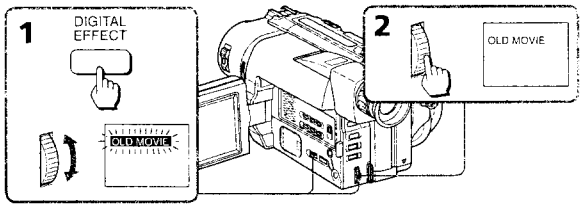


**To cancel the old movie function**
Press DIGITAL EFFECT.

**Notes on the old movie function**

- The following functions do not work during old movie mode.
  - Functions using the FADER button
  - Functions using the PROGRAM AE button
  - Functions using the PICTURE EFFECT button
  - Exposure
  - Wide mode
  - Functions using the PHOTO button
- When you set the POWER switch to OFF, the old movie function will be cancelled automatically.

**Для отмены функции старинного кинофильма**
Нажмите DIGITAL EFFECT.

**Примечания к функции старинного кинофильма**

- Следующие функции не работают во время режима старинного кинофильма.
  - Функции с использованием кнопки FADER
  - Функции с использованием кнопки PROGRAM AE
  - Функции с использованием кнопки PICTURE EFFECT
  - Экспозиция
  - Широкоформатный режим
  - Функции с использованием кнопки PHOTO
- Когда Вы установите выключатель POWER в положение OFF, функция старинного кинофильма будет отменена автоматически.





## Focusing manually

## Ручная фокусировка

### When to use manual focus

In the following cases you should obtain better results by adjusting the focus manually.

### Когда использовать ручную фокусировку

В следующих случаях Вы можете получить лучшие результаты, отрегулировав фокусировку вручную.

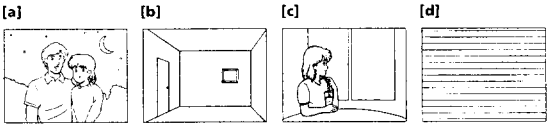


- Insufficient light **[a]**
- Subjects with little contrast - walls, sky, etc. **[b]**
- Too much brightness behind the subject **[c]**
- Horizontal stripes **[d]**
- Subjects through frosted glass
- Subjects beyond nets, etc.
- Bright subject or subject reflecting light
- Shooting a stationary subject when using a tripod

- Недостаточное освещение **[a]**
- Объекты с малым контрастом - стены, небо и т.д. **[b]**
- Слишком яркий фон за объектом **[c]**
- Горизонтальные полосы **[d]**
- Съемка объектов через матированное стекло
- Объекты за сеткой и т.д.
- Яркий объект или объект, отражающий свет
- Съемка неподвижного объекта с использованием треноги

## Focusing manually

When focusing manually, first focus in telephoto before recording, and then reset the shot length.
(1) Set FOCUS to MANUAL. The ☞ indicator appears in the viewfinder or on the LCD screen.
(2) Move the power zoom lever to the end of the "T" side in the optical zoom zone.
(3) Turn the NEAR/FAR dial to achieve a sharp focus.
(4) Set the desired shot length using the power zoom lever.

## Ручная фокусировка

При ручной фокусировке сперва выполняйте фокусировку в режиме телефото перед записью, а затем установите расстояние съемки.
(1) Установите FOCUS на MANUAL. Индикатор ☞ появляется в видоискателе или на экране ЖКД.
(2) Перемещайте рычаг приводного трансфокатора стороны "T" в зоне оптической трансфокации.
(3) Поверните диск NEAR/FAR для получения четкой фокусировки.
(4) Установите желаемое расстояние съемки с использованием рычага приводного трансфокатора.



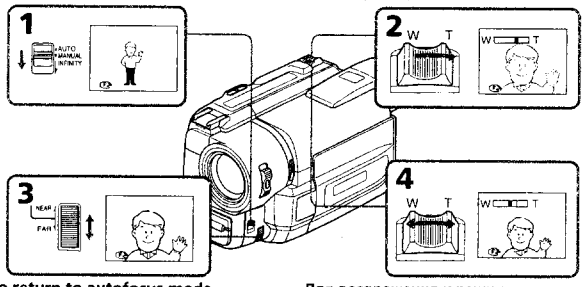


**To return to autofocus mode**
Set FOCUS to AUTO. The ☞ indicator in the viewfinder or on the LCD screen disappears.

**Shooting in relatively dark places**
Shoot at wide-angle after focusing in the telephoto position.

**To record a very distant subject**
Push FOCUS down to INFINITY. The lens focuses on the most distant subject while FOCUS is held down. When it is released, manual focus mode is resumed.
Use this function when shooting through a window or a screen, to focus on a most distant subject.

**Note on manual focusing**
The following indicators may appear:
▲ when recording a very distant subject.
▲ when the subject is too close to focus on.

**Для возвращения к режиму автоматической фокусировки**
Установите FOCUS на AUTO. Индикатор ☞ исчезнет из видоискателя или с экрана ЖКД.

**Съемка в относительно темном месте**
Производите съемку в положении широкого угла после выполнения фокусировки в положении телефото.

**Для записи очень удаленного объекта**
Нажать FOCUS вниз до INFINITY. Объектив фокусируется на наиболее удаленный объект, когда FOCUS удерживается в нажатом состоянии. После отпускания режим ручной фокусировки будет восстановлен. Используйте эту функцию при съемке через окно или решетку для фокусировки на наиболее удаленные объекты.

**Примечание к ручной фокусировке**
Могут появляться следующие индикаторы
▲ При записи очень удаленного объекта.
▲ Когда объект находится слишком близко для фокусировки.





## Using picture effect function

(1) Press PICTURE EFFECT.
(2) Turn the control dial to select the desired picture effect mode.

## Использование функции эффектов изображения

(1) Нажмите PICTURE EFFECT.
(2) Поверните регулировочный диск для выбора желаемого режима эффекта изображения.



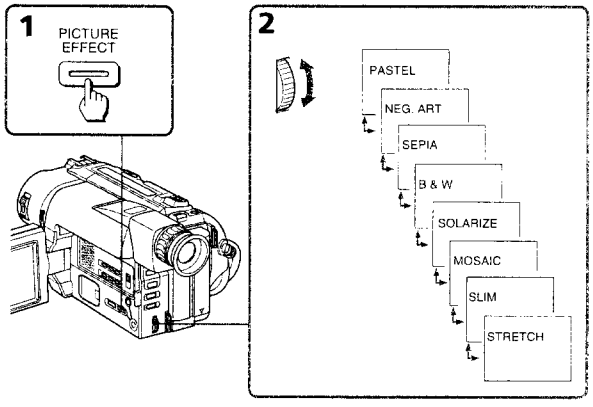


**To turn off picture effect**
Press PICTURE EFFECT. The indicator in the viewfinder or on the LCD screen goes out.

**Notes on the picture effect**
- When you turn the power off, the camcorder returns automatically to normal mode.
- While using the picture effect function, you cannot select the old movie function with DIGITAL EFFECT (CCD-TRV55E only).

**Выключение эффекта изображения**
Нажмите PICTURE EFFECT. Индикатор эффекта изображения исчезнет из видоискателя или с экрана ЖКД.

**Примечание к эффектам изображения**
- Когда Вы выключаете питание, видеокамера автоматически возвращается к нормальному режиму.
- Во время использования функции эффектов изображений Вы не можете выбрать функцию старинного фильма с помощью DIGITAL EFFECT (только CCD-TRV55E).





## Selecting picture effect

You can make pictures like those of television with the Picture Effect function.

## Выбор эффекта изображения

Вы можете сделать изображение похожим на те, что передают по телевидению с помощью функции эффектов изображения.

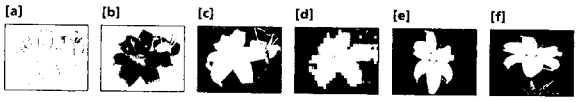


**PASTEL [a]**
The contrast of the picture is emphasized, and the picture looks like an animated cartoon.

**NEG. ART [b]**
The colour and brightness of the picture is reversed.

**SEPIA**
The picture is sepia.

**B&W**
The picture is monochrome (black and white).

**SOLARIZE [c]**
The light intensity is more clear, and the picture looks like an illustration.

**MOSAIC [d]**
The picture is mosaic.

**SLIM [e]**
The picture expands vertically.

**STRETCH [f]**
The picture expands horizontally.

**PASTEL [a]**
Контрастность изображения усиливается, и изображение выглядит, как мультипликация.

**NEG. ART [b]**
Цвет и яркость изображения будут негативными.

**SEPIA**
Изображение будет в цвете сепия.

**B&W**
Изображение будет монохроматическим (черно-белым)

**SOLARIZE [c]**
Интенсивность света будет более яркой, и изображение будет выглядеть, как иллюстрация.

**MOSAIC [d]**
Изображение будет мозаичным.

**SLIM [e]**
Изображение расширяется по вертикали.

**STRETCH [f]**
Изображение расширяется по горизонтали.



## When to adjust the exposure

Adjust the exposure manually under the following cases.

## Когда требуется регулировать экспозицию

Отрегулируйте экспозицию вручную в следующих случаях.

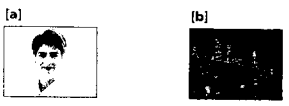


**[a]**
- The background is too bright (back lighting)
- Insufficient light: most of the picture is dark

**[b]**
- Bright subject and dark background
- To record the darkness faithfully

**[a]**
- Фон является слишком ярким (задняя подсветка)
- Недостаточное освещение: большая часть изображения темная

**[b]**
- Яркий предмет на темном фоне
- Для хорошей записи в темноте

## Adjusting the exposure

(1) Press EXPOSURE.
(2) Turn the control dial to adjust the brightness.

## Регулировка экспозиции

(1) Нажмите EXPOSURE.
(2) Поверните регулировочный диск для регулировки яркости.

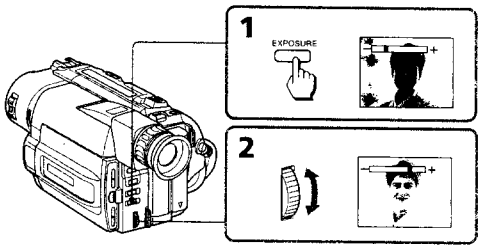


**To return to automatic exposure mode**
Press EXPOSURE again.

**Для возврата к режиму автоматической экспозиции**
Снова нажмите EXPOSURE.

## Adjusting the exposure / Регулировка экспозиции

**Shooting with the sun behind you**
If the light source is behind your subject, or in the following situations, the subject will be recorded too dark.
- The subject is indoors and there is a window behind the subject
- Bright light sources are included in the scene.
- When shooting a person wearing white or shiny clothes in front of a white background, the face will be recorded too dark.

**Shooting in the dark**
We recommend you to use a video light (not supplied). To get the best colour, you must maintain a sufficient light level.

**When you adjust the exposure manually**
- BACK LIGHT does not work.
- If you change the PROGRAM AE mode, the camcorder automatically returns to automatic exposure mode.

**Съемка, когда солнце находится у Вас за спиной**
Если источник освещения находится у Вас за спиной или в следующих условиях, объект будет записан слишком темным.
- Объект внутри помещения и окно находится за объектом.
- Источники яркого освещения попадают в кадр.
- Когда снимаемается человек, носящий белую или блестящую одежду, на белом фоне, лицо может стать темным.

**Съемка в темных условиях**
Мы рекомендуем Вам использовать видеофонарь (не прилагается). Для получения наилучшего цвета Вы должны поддерживать достаточный уровень освещения.

**Когда Вы регулируете экспозицию вручную**
- Функция BACK LIGHT не работает.
- Если Вы изменяете режим PROGRAM AE видеокамера автоматически возвращается к режиму автоматической экспозиции.

Advanced operations / Усовершенствованные операции

## Superimposing a title / Наложение надписи

You can select one of eight preset titles and two custom titles. You can also select the language, colour, size and position of titles.

### Superimposing titles

(1) Press TITLE to display the title menu.
(2) Turn the control dial to select 🗀, then press the dial.
(3) Turn the control dial to select the desired title, then press the dial. The titles are displayed in the language you selected.
(4) Turn the control dial to select the colour, size, or position, then press the dial.
(5) Turn the control dial to select the desired item, then press the dial.
(6) Repeat step 4 and 5 until the title is arranged as desired.
(7) Press control dial again to complete the setting.
(8) When you want to stop recording the title, press TITLE.

Вы можете выбирать из восьми предварительно установленных надписей и двух собственных надписей. Вы можете также выбирать язык, цвет, размер и положение надписей.

### Наложение надписей

(1) Нажмите TITLE для отображения меню надписей.
(2) Поверните регулировочный диск для выбра 🗀, а затем нажмите диск.
(3) Поверните регулировочный диск для выбора надписи, а затем нажмите регулировочный диск. Надпись отображается на выбранном Вами языке.
(4) Поверните регулировочный диск для выбора цвета, размера или положения, а затем нажмите регулировочный диск.
(5) Поверните регулировочный диск для выбора желаемого элемента, а затем нажмите регулировочный диск.
(6) Повторяйте пункты 4 и 5 до тех пор, пока не отрегулируете надпись по своему желанию.
(7) Нажмите регулировочный диск снова для завершения установки.
(8) Когда Вы захотите закончить запись надписи, нажмите TITLE.

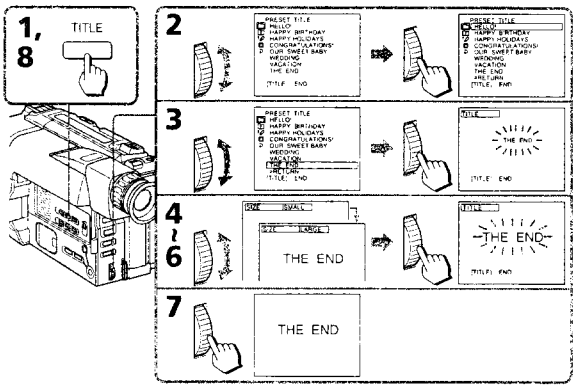


61 62

## Superimposing a title / Наложение надписи

**To superimpose the title from beginning**
After step 7, press START/STOP to start recording.

**To superimpose the title while you are recording**
After pressing START/STOP to start recording, start from step 1. In this case, beep is not heard.

**To select the language of preset title**
When you want to select the language, select 🅰 before step 2. Then select language and return to step 2.

**To use the custom title**
When you want to use the custom title, select 🗀 in step 2.

**Notes on superimposing a title**
- If you have not given any custom title, "– – – – ..." appears on the display.
- The FADER function works while the title is displayed, however, the title does not fade.
- If you display the menu or title menu while superimposing a title, the title is not recorded while the menu or title menu is being displayed.

**Title colour changes as follows :**
WHITE ↔ YELLOW ↔ VIOLET ↔ RED ↔ CYAN ↔ GREEN ↔ BLUE

**Title size changes as follows :**
SMALL ↔ LARGE

**Title position changes as follows :**
When you select the title size "SMALL", you can choose 9 positions. When you select the title size "LARGE" you can choose 8 positions.

**Notes on the title**
- Depending on size or position of the title, both of date and time or either of them is not displayed.
- If you input 13 characters or more for a LARGE title, the title is automatically reduced into a proper size after the position is set.
- When the title is displayed, LCD BRIGHT and VOLUME indicators do not appear.

**Для наложения надписи от начала**
После пункта 7 нажмите START/STOP для начала записи.

**Для наложения надписи в процессе записи**
После нажатия START/STOP для начала записи начните с пункта 1. В этом случае зуммерный сигнал подаваться не будет.

**Для выбора языка предварительно установленной надписи**
Если Вы хотите выбрать язык, выберите 🅰 перед пунктом 2. Затем выберите язык и вернитесь к пункту 2.

**Для выбора собственной надписи**
Если Вы хотите использовать собственную надпись, выберите 🗀 в пункте 2.

**Примечания к наложению надписи**
- Если Вы не дали надписи никакого названия, на дисплее появится индикация "– – – – ...".
- Функция FADER во время отображения названия работает, однако название плавно не вводится и не выводится.
- Если Вы отобразите дисплей меню или меню надписей во время наложения надписи, то надпись не будет записываться во время отображения дисплея меню или меню надписей.

**Цвет надписей изменяется следующим образом:**
WHITE ↔ YELLOW ↔ VIOLET ↔ RED ↔ CYAN ↔ GREEN ↔ BLUE

**Размер надписей изменяется следующим образом:**
SMALL ↔ LARGE

**Положение надписи изменяется следующим образом:**
Если Вы выбираете размер надписи "SMALL", то Вы можете выбирать одно из 9 положений. Когда Вы выбираете размер надписи "LARGE", Вы может выбирать из 8 положений.

**Примечания к надписям**
- В зависимости от размера или положения названия дата и время или же что-то одно из них не отображается.
- Если Вы ввели 13 знаков или более для размера надписи LARGE, надпись автоматически уменьшается до надлежащего размера после выбора положения.
- Когда отображается надпись, индикаторы LCD BRIGHT и VOLUME появляться не будут.

Advanced operations / Усовершенствованные операции

## Making your own titles / Создание Ваших собственных надписей

You can make up to two titles and store them in the camcorder. We recommend to set the POWER switch to VTR or eject the cassette before you begin.
Your title can have up to 20 characters.
(1) Press TITLE to display the title menu.
(2) Turn the control dial to select 🖉, then press the dial.
(3) Turn the control dial to select the first line (CUSTOM1) or second line (CUSTOM2), then press the dial.
(4) Turn the control dial to select the column of the desired character, then press the dial.
(5) Turn the control dial to select the desired character, then press the dial.
(6) Repeat step 4 and 5 until you finish the title.
(7) For finishing the titling work, turn the control dial to select SET, then press the dial.

Вы можете создать две надписи и сохранить их в памяти видеокамеры. Мы рекомендуем установить выключатель POWER в положение VTR или вытолкнуть кассету перед началом.
Ваша надпись может иметь до 20 знаков.
(1) Нажмите TITLE для отображения меню надписей.
(2) Поверните регулировочный диск для выбара 🖉, а затем нажмите диск.
(3) Поверните регулировочный диск для выбора первой линии строки (CUSTOM1) или второй линии строки (CUSTOM2), а затем нажмите диск.
(4) Поверните регулировочный диск для выбора колонки с желаемым знаком, а затем нажмите диск.
(5) Поверните регулировочный диск для выбора желаемого знака, а затем нажмите регулировочный диск.
(6) Повторяйте пункты 4 и 5 до тех пор, пока не закончите надпись.
(7) Для окончания работы по созданию надписи поверните регулировочный диск для выбора SET, а затем нажмите диск.

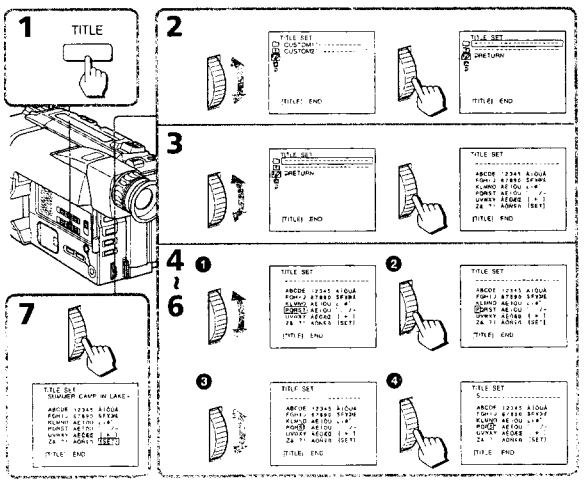


63 64

## Making your own titles

## Создание Ваших собственных надписей

### To edit a title you have stored

In step 3, select CUSTOM1 or CUSTOM2, depending on which title you want to edit, then change the title.

**Note**

You can not enter over 20 characters title.

### If you take 5 minutes or longer to enter characters while a cassette is in the camcorder

The power goes off automatically. Characters you have entered remain. Turn STANDBY down once and then up again, then proceed from step 1.

### To delete a title

In step 4, turn the control dial to select [←] then press the dial. The last character is erased. Repeat this step until all characters are deleted. Do not erase the title by selecting empty spaces. If you do so, a title full of empty spaces is stored.

### Для редактирования запомненной надписи

В пункте 3 выберите CUSTOM1 или CUSTOM2 в зависимости от того, какую надпись Вы хотите отредактировать, а затем измените надпись.

**Примечание**

Вы не можете ввести больше, чем 20 знаков.

### Если проходит 5 минут или более при вводе знаков в то время, когда кассета находится в видеокамере

Питание выключится автоматически. Знаки, которые Вы ввели, остаются в памяти. Поверните STANDBY один раз вниз, а затем снова вверх и начните с пункта 1.

### Для отмены надписи

В пункте 4 поверните диск управления, чтобы выбрать [←], затем нажмите диск. Последний знак будет стерт. Повторяйте это действие до тех пор, пока не будут удалены все знаки. Не стирайте надпись путем выбора пробелов. Если Вы так сделаете, то будет запомнена надпись, состоящая из одних пробелов.





## Recording with the date/time

## Запись с датой/временем

Before you start recording or during recording, press DATE or TIME. You can record the date or time displayed in the viewfinder or on the LCD screen with the picture. Press DATE (or TIME), then press TIME (or DATE) to display the date and time together.
The clock is set at the factory to Sydney time for Australia and New Zealand models, to Tokyo time for the models sold in Japan and to Hong Kong time for the other models. You can reset the clock in the menu system.

Перед началом записи нажмите DATE или TIME. Вы можете записывать дату или время, отображаемые в видоискателе или на экране ЖКД вместе с изображением. Нажмите DATE (или TIME), а затем нажмите TIME (или DATE) для отображения даты и времени одновременно.
Часы установлены на заводе на время Сиднея для австралийских и новозеландских моделей, на время Токио для моделей, продаваемых в Японии, и на время Гонконга для остальных моделей. Вы можете заново установить часы в системе меню.

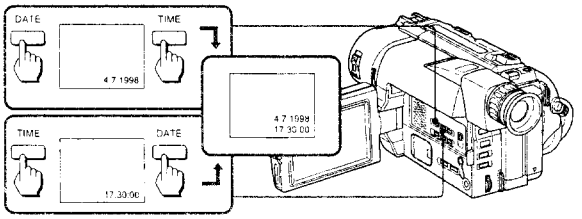


### To stop recording with the date and/or time

Press DATE and/or TIME again. The date and/or time indicator disappears. The recording continues.

### Для останова записи с датой и/или временем

Нажмите DATE и/или TIME снова. Индикатор даты и/или времени исчезнет. Запись будет продолжена.



## Optimizing the recording condition

## Оптимизация состояния записи

Use this feature to check the tape condition before recording, so that you can get the best possible picture (ORC).
(1) While the camcorder is in Standby mode, press MENU to display the menu.
(2) Turn the control dial to select [image], then press the dial.
(3) Turn the control dial to select ORC TO SET, then press the dial.
"START/STOP KEY" flashes.
(4) Press START/STOP.
The camcorder takes about 5 seconds to check the tape condition and then returns to Standby mode.

Используйте данную функцию для проверки состояния ленты перед записью, так, чтобы Вы могли получить наилучшее по возможности изображение (ORC).
(1) Когда видеокамера будет находится в режиме готовности, нажмите MENU для отображения меню.
(2) Нажмите регулировочный диск для выбора [image], а затем нажмите диск.
(3) Поверните регулировочный диск для выбора ORC TO SET, а затем нажмите диск.
"START/STOP KEY" будет мигать.
(4) Нажмите START/STOP.
Видеокамере требуется около 5 секунд для проверки состояния ленты, а затем она возвращается в режим готовности.

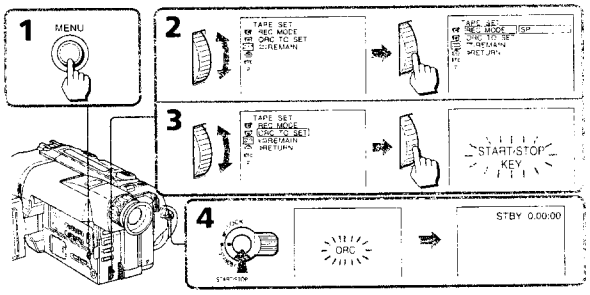


### Each time you insert the cassette

Perform the above procedures.

**Notes on the ORC function**

- When you set ORC TO SET, the recording on the tape is erased for about 0.1 second so that the camcorder can check the tape condition. Be careful when you use a recorded tape. The 0.1 second blank is erased if you record from the point where you set ORC TO SET for more than 2 seconds, or if you record over the blank.
- You cannot use this function on a tape with the red mark on the cassette exposed.

### Каждый раз, когда Вы вставляете кассету

Выполняйте вышеописанную процедуру.

**Примечания к функции ORC**

- Когда Вы устанавливаете ORC TO SET, запись ленты стирается на 0,1 секунды, так, чтобы видеокамера смогла проверить состояние ленты. Будьте осторожны, когда Вы используете записанную ленту. 0,1-секундный пробел исчезает, если Вы начинаете запись от точки, где Вы установили ORC TO SET более, чем на 2 секунды, или если производите запись поверх незаписанной части.
- Вы не можете использовать данную функцию с лентой, если на кассете вставлена красная метка.





## Releasing the STEADY SHOT function

## Отключение функции STEADY SHOT

When the Steady Shot function is working, the camcorder compensates for camera-shake.

You can release the Steady Shot function when you do not need to use the Steady Shot function. The "✋" indicator appears in the viewfinder or on the LCD screen. Do not use the Steady Shot function when shooting a stationary object with a tripod.
You can select ON or OFF in the menu system (p. 32).

### To activate the Steady Shot function again

Set STEADYSHOT to ON in the menu system.

**Notes on the Steady Shot function**

- The Steady Shot function will not correct excessive camera-shake.
- When you set STEADYSHOT to ON or OFF in the menu system, the exposure may fluctuate.
- Steady Shot does not operate in 16:9 FULL mode. If you set STEADYSHOT to ON in the menu system, the "✋" indicator flashes.

Когда работает функция устойчивой съемки, видеокамера осуществляет компенсацию дрожания видеокамеры.

Вы можете отключить функцию устойчивой съемки, когда Вы не нуждаетесь в использовании функции устойчивой съемки. Индикатор "✋" появляется в видоискателе или на экране ЖКД. Не используйте функцию устойчивой съемки при съемке неподвижных объектов с помощью треноги.
Вы можете выбирать ON или OFF в системе меню (стр. 32).

### Для активизации функции устойчивой съемки снова

Установите STEADYSHOT на ON в системе меню.

**Примечания к функции устойчивой съемки**

- Функция устойчивой съемки не откорректирует чрезмерного дрожания видеокамеры.
- При установке фучкции STEADYSHOT на ON или OFF в системе меню экспозиция может колебаться.
- Фучкция устойчивой съемки не работает в режиме 16:9 FULL. Если Вы установите STEADYSHOT на ON в системе меню, индикатор "✋" будет мигать.

## Watching on a TV screen

## Просмотр на экране телевизора

Connect the camcorder to your TV or VCR to watch the playback picture on the TV screen. When monitoring the playback picture by connecting the camcorder to your TV, we recommend you to use the mains for the power source.

While playing back on a TV screen, close the LCD panel. Otherwise, picture distortion may occur.

Подсоедините видеокамеру к Вашему телевизору или КВМ для просмотра воспроизводимого изображения на экране телевизора. При просмотре воспроизводимого изображения путем подсоединения видеокамеры к Вашему телевизору мы рекомендуем Вам использовать электрическую сеть в качестве источника питания.

Во время воспроизведения на экране телевизора, закройте панель ЖКД. В противном случае могут происходить искажения изображения.

## Watching on a TV screen / Просмотр на экране телевизора

### Connecting directly to a TV/VCR with Video/Audio input jacks

When connecting the A/V connecting cable, make sure you connect the plug to jacks of the same colour.
Open the jack cover. With using the supplied A/V connecting cable, connect the camcorder to the LINE IN inputs on the TV or VCR connected to the TV. Set the TV/VCR selector on the TV to VCR. When connecting to the VCR, set the input selector on the VCR to LINE.

### Подсоединение прямо к телевизору/КВМ с входными гнездами аудио/видео

При подсоединении соединительного кабеля аудио/видео убедитесь, что Вы подсоединяете штекеры к гнездам одинакового цвета.
Откройте крышку гнезда. Подсоедините видеокамеру к входам LINE IN на телевизоре или на подсоединенном к телевизору КВМ с использованием прилагаемого соединительного кабеля аудио/видео.
Установите селектор TV/VCR на телевизоре в положение VCR. При подсоединении к КВМ установите селектор входных сигналов на КВМ в положение LINE.

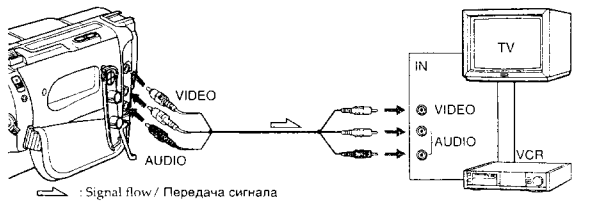


**If your TV or VCR is a monaural type**
Connect only the white plug for audio on both the camcorder and the TV or the VCR. With this connection, the sound is monaural even in stereo model.

**To connect to a TV or VCR without Video/Audio input jacks**
Use an RFU adaptor (not supplied).

**Если Ваш телевизор или КВМ монофонического типа**
Подсоедините только белый разъем для аудиосигналов и к видеомагнитофону и к телевизору или КВМ. При таком соединении звук будет монофоническим, даже если для стереофонической модели видеокамеры.

**Для подсоединения к телевизору или КВМ без входных гнезд аудио/видео**
Используйте ВЧ-адаптер (не прилагается).





## Enjoying digital effect during playback / Наслаждение цифровыми эффектами во время воспроизведения

**– CCD-TRV55E only**
During playback, you can process a scene using the digital effect functions; Still, Flash motion, Luminancekey and Trail. For the features of each function, refer to previous pages.
You can watch the processed picture on a TV or use it for editing on other video equipment. You cannot record on this camcorder during this operation.
**(1)** During playback, press DIGITAL EFFECT and turn the control dial until the desired digital effect indicator (STILL, FLASH, LUMI. or TRAIL) flashes.
**(2)** Press the control dial.
The digital effect indicator lights up and the bars appear. In still or luminancekey mode, the picture where you press the control dial is stored in memory as a still picture.
**(3)** Turn the control dial to adjust the effect.

**– Только CCD-TRV55E**
Во время воспроизведения Вы можете обработать сцену с использованием функций цифровых эффектов: стоп-кадра, периодического движения, яркости изображения переднего плана и запаздывания. Для ознамкомления с особенностями каждой функции обратитесь к предыдущим страницам.
Вы можете смотреть обработанное изображение на экране телевизора или использовать его для монтажа на другую видеоаппаратуру. Вы не можете выполнять запись на данной видеокамере во время такой операции.
**(1)** Во время воспроизведения нажмите DIGITAL EFFECT и поварачивайте регулировочный диск до тех пор, пока желаемый индикатор (STILL, FLASH, LUMI или TRAIL) не начнет мигать.
**(2)** Нажмите регулировочный диск.
Индикатор цифрового эффекта будет гореть, и появляются полосы шкалы этой функции. В режиме стоп-кадра или яркости изображения переднего плана изображение при нажатии регулировочного диска запоминается в памяти, как неподвижное изображение.
**(3)** Поверните регулировочный диск для регулировки эффекта.

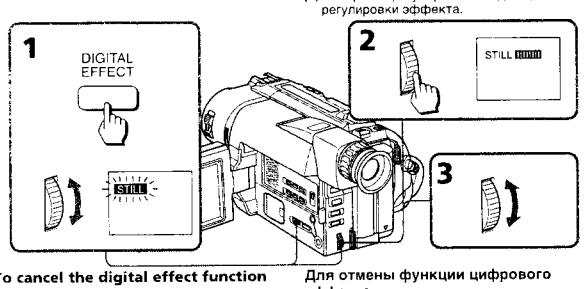


**To cancel the digital effect function**
Press DIGITAL EFFECT.

**Notes on the digital effect function**
- In skip scan, slow or pause mode, noise appears on the picture.
- When the digital effect indicator flashes rapidly, you cannot use the digital effect function.

**Для отмены функции цифрового эффекта**
Нжамите DIGITAL EFFECT.

**Примечания к функции цифрового эффекта**
- При выполнении поиска методом прогона, замедленном воспроизведении или режиме паузы на изображении будут появляться помехи.
- Когда индикатор цифрового эффекта будет мигать, Вы не можете использовать функцию цифрового эффекта.



## Editing onto another tape / Монтаж на другую ленту

You can create your own video programme by editing with any other 8 mm, Hi8 Hi8, VHS VHS, S-VHS S-VHS, VHSC VHSC, S-VHSC S-VHSC or Betamax VCR that has video/audio inputs.

### Before editing

Connect the camcorder to the VCR using the supplied A/V connecting cable.
Set the input selector on the VCR to LINE, if available.
Set EDIT to ON in the menu system (p. 32).

### Starting editing

Turn down the volume of the camcorder while editing. Otherwise, picture distortion may occur.
**(1)** Insert a blank tape (or a tape you want to record over) into the VCR, and insert your recorded tape into the camcorder.
**(2)** Play back the recorded tape on the camcorder until you locate the point just before where you want to start editing, then press II to set the camcorder in playback pause mode.
**(3)** On the VCR, locate the recording start point and set the VCR in recording pause mode.
**(4)** First press II on the camcorder, and after a few seconds press II on the VCR to start editing.

**To edit more scenes**
Repeat steps 2 to 4.

**To superimpose the title while you are editing**
You can superimpose the title while you are editing. Refer to "Superimposing a title" (p. 62).

**To stop editing**
Press ■ on both the camcorder and the VCR.

**Note on Fine Synchro Edit**
If you connect a video deck that has the Fine Synchro Edit feature to the LANC jack of the camcorder, using a LANC cable (not supplied), the edit will be even more precise.

Вы можете создать Вашу собственную видеопрограмму путем монтажа с помощью другого КВМ типа 8 мм, Hi8 Hi8, VHS VHS, S-VHS S-VHS, VHSC VHSC, S-VHSC S-VHSC или Betamax, который имеет входы аудио/видео.

### Перед монтажем

Подсоедините видеокамеру к КВМ, используя прилагаемый соединительный кабель аудио/видео.
Установите селектор входных сигналов на КВМ в положение LINE, если такое имеется.
Установите EDIT на ON в системе меню (стр. 32).

### Начните монтаж

Понизьте громкость видеокамеры во время монтажа. В противном случае может произойти искажение изображения.
**(1)** Вставьте чистую ленту (или ленту, которую Вы хотите перезаписать) в КВМ и вставьте Вашу записанную ленту в видеокамеру.
**(2)** Воспроизводите записанную ленту в видеокамере до тех пор, пока Вы не обнаружите точку немного ранее того места, откуда Вы хотите начать монтаж, а затем нажмите II для установки видеокамеры на режим паузы воспроизведения.
**(3)** Найдите на КВМ точку начала записи и установите КВМ на режим паузы записи.
**(4)** Сперва нажмите II на видеокамере, а затем через несколько секунд нажмите II на КВМ для начала монтажа.

**Для монтажа других сцен**
Повторите пункты со 2 по 4.

**Для наложения надписи во время монтажа**
Вы можете наложить надпись во время монтажа. См. "Наложение надписи" (стр. 62).

**Для остановки монтажа**
Нажмите ■ и на видеокамере и на КВМ.

**Примечание к точному синхронному монтажу**
Если Вы подсоедините видеодеку, которая имеет функцию точного синхронного монтажа к гнезду LANC на видеокамере с использованием кабеля LANC (не прилагается), то монтаж будет еще более точный.





## Recording from a VCR or TV / Запись с КВМ или телевизора

You can record a tape from another VCR or a TV programme from a TV that has video/audio outputs. Connect the camcorder to the VCR or TV using the supplied A/V cable. Turn down the volume of the camcorder while editing. Otherwise, picture distortion may occur.
**(1)** While pressing the small green button on the POWER switch, set it to VTR.
**(2)** Set DISPLAY to LCD in the menu system. Then press ● REC and the button on the right together on the camcorder at the point where you want to start recording.
In recording and recording pause mode, VIDEO/AUDIO jacks automatically work as input jacks.

Вы можете записать ленту с другого КВМ или телевизионную программу с телевизора, который имеет выходы видео/аудио. Подсоедините видеокамеру к КВМ или телевизору с использованием прилагаемого кабеля видео/аудио. Понизьте громкость видеокамеры во время монтажа. В противном случае может произойти искажение изображения.
**(1)** Нажимая маленькую зеленую кнопку на выключателе POWER, установите его в положение VTR.
**(2)** Установите DISPLAY на LCD в системе меню. Затем вместе нажмите кнопку ● REC и кнопку справа от нее на видеокамере в точке, где Вы хотите начать запись.
В режиме записи или паузы записи гнезда VIDEO/AUDIO автоматически работают в качестве входных гнезд.

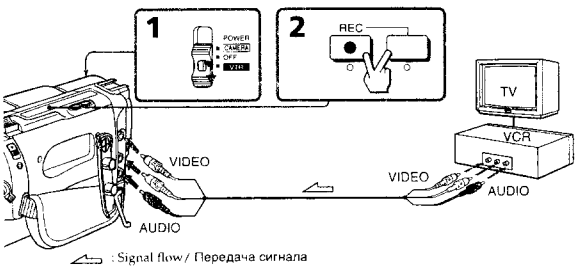


If your VCR or TV is a monaural type, connect only the white plug for audio on both the camcorder and the VCR or TV.

**To stop recording**
Press ■.

**Note on recording**
You cannot record a picture that has a copyright control signal for copyright protection of software. "COPY INHIBIT" appears if you try to record such a picture.

Если Ваш КВМ или телевизор монофонического типа, подсоедините только белый разъем для аудиосигналов и на видеокамере и на КВМ или телевизоре.

**Для останова записи**
Нажмите ■.

**Примечание к записи**
Вы не можете записать изображение, которое содержит контрольные сигналы авторского права для защиты авторского права видеопрограммы. "COPY INHIBIT" появится, если Вы попробуете выполнить запись такого изображения.

Additional information

## Changing the lithium battery in the camcorder

Дополнительная информация

## Замена литиевой батарейки в видеокамере

Your camcorder is supplied with a lithium battery installed. When the battery becomes weak or dead, the ⚙ indicator flashes in the viewfinder for about 5 seconds when you set the POWER switch to CAMERA. In this case, **replace the battery with a Sony CR2025 or Duracell DL-2025 lithium battery. Use of any other battery may present a risk of fire or explosion.** Discard used batteries according to the manufacturer's instructions.
The lithium battery for the camcorder lasts for about 1 year under normal operation. (The lithium battery that comes installed at the factory may not last 1 year.)

Ваша видеокамера снабжена установленной литиевой батарейкой. Если батарейка станет слабой или полностью разрядится, индикатор ⚙ будет мигать в видоискателе приблизительно в течение 5 секунд, когда Вы установите выключатель POWER в положение CAMERA. В таком случае **замените батарейку на литиевую батарейку Sony CR2025 или Duracell DL-2025. Использование какой-нибудь другой батарейки может представлять риск воспламенения или взрыва.** Выбросьте использованную батарейку в соответствии с указаниями изготовителя.
Литиевой батарейки для видеокамеры хватает приблизительно на 1 год при нормальных условиях эксплуатации. (Литиевой батарейки, которая была установлена на заводе, может не хватить на 1 год.)

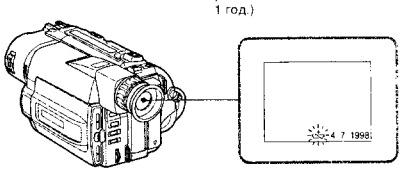

### Notes on lithium battery

- **Keep the lithium battery out of the reach of children.**
  **Should the battery be swallowed, immediately consult a doctor.**
- Wipe the battery with a dry cloth to assure a good contact.
- Do not hold the battery with metallic tweezers, otherwise a short-circuit may occur.
- Note that the lithium battery has a positive (+) and a negative (–) terminals as illustrated. **Be sure to install the lithium battery so that terminals on the battery match the terminals on the camcorder.**

### Примечания к литиевой батарейке

- **Держите литиевую батарейку в недоступном для детей месте.**
  **Если батарейка была проглочена, немедленно обратитесь к доктору.**
- Протрите батарейку сухой тканью для обеспечения хорошего контакта.
- Не берите батарейку металлическими щипцами, или же может произойти короткое замыкание.
- Учтите, что литиевая батарейка имеет положительный (+) и отрицательный (–) полюсы, как показано на рисунке.
  **Обязательно вставьте литиевую батарейку так, чтобы полюсы на батарейке соответствовали полюсам на видеокамере.**

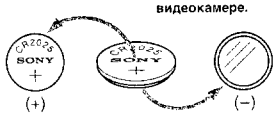




Additional information

## Changing the lithium battery in the camcorder

Замена литиевой батарейки в видеокамере

**WARNING**
The battery may explode if mistreated. Do not recharge, disassemble, or dispose of in fire.

### Changing the lithium battery

When replacing the lithium battery, keep the battery pack or other power source attached. Otherwise, you will need to reset the date, time and other items in the menu system retained by the lithium battery.
**(1)** Open the LCD panel and open the lid of the lithium battery compartment.
**(2)** Push the lithium battery down once and pull it out from the holder.
**(3)** Install the lithium battery with the positive (+) side facing out. Close the lid.

**ПРЕДУПРЕЖДЕНИЕ**
При неправильном обращении батарейка может взорваться. Не перезаряжайте, не разбирайте и не бросайте батарейку в огонь.

### Замена литиевой батарейки

При замене литиевой батарейки, оставьте подсоединенным батарейный блок или другой источник питания. В противном случае Вам понадобится снова устанавливать дату, время и другие установки в системе меню, хранимые посредством литиевой батарейки.
**(1)** Откройте панель ЖКД и откройте крышку отсека литиевой батарейки.
**(2)** Нажмите батарейку вниз и вытащите ее из держателя.
**(3)** Установите литиевую батарейку положительной (+) стороной, обращенной наружу. Закройте крышку.

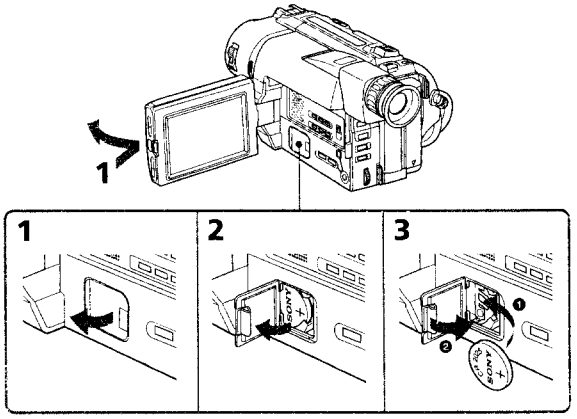




Additional information

## Resetting the date and time

Установка даты и времени

You can reset the date and time in the menu system.
**(1)** While the camcorder is in Standby mode, press MENU to display the menu.
**(2)** Turn the control dial to select 🕒, then press the dial.
**(3)** Turn the control dial to select CLOCK SET, then press the dial.
**(4)** Turn the control dial to adjust the desired year, then press the dial.
**(5)** Set the month, day, hour and minute by turning the control dial and pressing the dial.
**(6)** Press MENU to erase the menu display.

Вы можете установить дату и время в системе меню.
**(1)** Когда видеокамера будет находится в режиме готовности нажмите MENU для отображения меню.
**(2)** Поверните регулировочный диск для выбора 🕒, а затем нажмите диск
**(3)** Поверните регулировочный диск для выбора CLOCK SET, а затем нажмите диск.
**(4)** Поверните регулировочный диск для регулировки желаемого года, а затем нажмите регулировочный диск.
**(5)** Установите месяц, дату, часы и минуты, поворачивая регулировочный диск, а затем нажимая диск.
**(6)** Нажмите MENU для стирания дисплея меню.

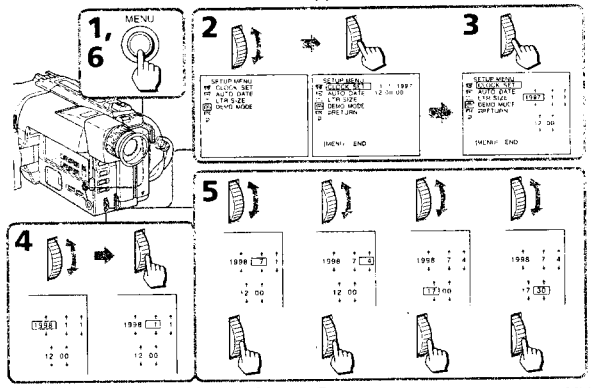


### To correct the date and time setting

Repeat the above procedure.

### To check the preset date and time

Press DATE to display the date indicator.
Press TIME to display the time indicator.
When you press the same button again, the indicator goes off.

**The year changes as follows:**

1997 ⟷ 1998 ← · · · · → 2029

**Note on the time indicator**
The internal clock of this camcorder operates on a 24-hour cycle.

### Для корректировки установки даты и времени

Повторите вышеописанную процедуру.

### Для проверки предварительно установленных даты и времени

Нажмите DATE для отображения индикатора даты.
Нажмите TIME для отображения индикатора времени.
Если Вы снова нажмете ту же самую кнопку, индикатор исчезнет.

**Год изменяется следующим образом:**

1997 ⟷ 1998 ← · · · · → 2029

**Примечание к индикатору времени**
Встроенные часы данной видеокамеры работают в 24-часовом цикле.



Additional information

## Simple setting of clock by time difference

Простая установка часов с помощью разницы во времени

You can easily set the clock for a local time by a time difference in the menu system.
**(1)** While the camcorder is the standby mode, press MENU to display the menu.
**(2)** Turn the control dial to select **ETC**, then press the dial.
**(3)** Turn the control dial to select WORLD TIME, then press the dial.
**(4)** Turn the control dial to set a time difference, and press the dial. The hour of clock changes in relation to a time difference which you set.
**(5)** Press MENU to erase the menu display.

Вы можете легко установить часы на местное время с помощью разницы во времени в системе меню.
**(1)** Когда видеокамера будет находится в режиме готовности нажмите MENU для отображения меню.
**(2)** Поверните регулировочный диск для выбора **ETC**, а затем нажмите диск
**(3)** Поверните регулировочный диск для выбора WORLD TIME, а затем нажмите диск.
**(4)** Поверните регулировочный диск для установки разницы во времени, а затем нажмите диск. Время на часах изменится в соответствии с разницей во времени, которую Вы установили.
**(5)** Нажмите MENU для стирания дисплея меню.

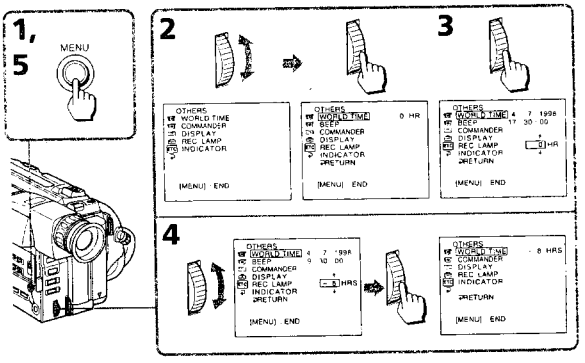


**Note on WORLD TIME**
If the time is not set, WORLD TIME does not work.

**Примечание к фукции WORLD TIME**
Если время не установлено, функция WORLD TIME не работает.

# Playback modes / Режимы воспроизведения

### What is video 8 XR

"XR", that is an abbreviation of "Extended Resolution", represents the new type of 8 mm camcorder that has the property to realize more quality picture compared with the conventional camcorders. You can record and play back pictures more clearly in detail with the "XR" camcorder.
Video tape recorded by a camcorder having the "XR" function shows excellent picture quality at maximum when it is played back by the "XR" camcorder.
When video tape recorded by this "XR" camcorder is played back by a conventional video 8 camcorder or when video tape recorded by a conventional video 8 camcorder is played back by this "XR" camcorder, the playback picture quality is in the normal quality of the video 8 camcorder.

### When you play back

The playback mode (SP/LP) and system (Hi8/standard 8 mm) are selected automatically according to the format in which the tape has been recorded. The quality of the recorded picture in LP mode, however, will not be as good as that in SP mode.

### Note on AFM HiFi stereo

When you play back a tape, the sound will be in monaural if:
- You record the tape using this camcorder, then play it back on an AFM HiFi monaural video recorder/player.
- You record the tape on an AFM HiFi monaural video recorder, then play it back on this camcorder.

### Что такое видео 8 XR

"XR" является аббревиатурой "Extended Resolution" (усовершенствованная разрешающая способность) и представляет собой новый тип видеокамеры 8-мм системы, в которой имеется свойство реализовывать более высокое качество изображения по сравнению с обычными видеокамерами. С помощью видеокамеры "XR" Вы можете записывать и воспроизводить изображения более четко, с более высокой зернистостью. Видеоленты, записанные на видеокамере с функцией "XR" обеспечивают превосходное качество изображения, особенно при воспроизведении ленты на видеокамере "XR".
Если видеоленту, записанную на данной вдеокамере "XR", воспроизводить на обычной видеокамере видео 8 или же если видеоленту, записанную на обычной видеокамере видео 8 воспроизводить на данной видеокамере "XR", качество воспроизводимого изображения будет нормальным качеством видеокамеры видео 8.

### Когда Вы осуществляете воспроизведение

Режим воспроизведения (SP/LP) и система (Hi8/8-мм стандарт) выбираются автоматически в соответствии с форматом, в котором была записана лента. Однако, качество изображения, записанного в режиме LP, не будет таким хорошим, как при записи в режиме SP.

### Примечание к стереозвучанию AFM Hi-Fi

Когда Вы воспроизводите ленту, звук будет монофоническим, если:
- Вы записали ленту с использованием данной видеокамеры, а затем воспроизводите ее на монофоническом видеомагнитофоне/видеоплейере AFM Hi-Fi.
- Вы записали ленту на монофоническом видеомагнитофоне AFM Hi-Fi, а затем воспроизводите на данной видеокамере.

Additional information / Дополнительная информация





### Foreign 8 mm video

Because the TV colour systems differ from country to country, you may not be able to play back foreign pre-recorded tapes. Refer to the list of "Using your camcorder abroad" to check the TV colour system of foreign countries.

### Playing back an NTSC-recorded tape

You can play back tapes recorded in the NTSC video system using the SP mode. If the tape is recorded in the AFM HiFi system, the AFM HiFi sound is reproduced. However, note that the following will occur during playback of an NTSC-recorded tape.
- When playing back a tape on a TV screen, you may not get the original colour depending on the TV. When you play back on a Multi System TV, set NTSC PB to the desired mode in the menu system.
- During playback, a black band appears on the lower part of the viewfinder.
- You cannot play back a tape recorded in NTSC video system with LP mode neither on the LCD nor on a TV screen.
- If a tape has portions recorded in PAL and NTSC video systems, the tape counter reading is not correct. This discrepancy is due to the difference between the counting cycle of the two video systems.
- You cannot edit the NTSC-recorded tape onto another VCR.

### Иностранные 8-мм видеоленты

Так как системы цветного телевидения отличаются в зависимости от страны, то может быть Вы не сможете воспроизводить иностранные предварительно записанные ленты. Смотрите перечень в разделе "Использование Вашей видеокамеры за границей" для проверки системы цветного телевидения иностранных государств.

### Воспроизведение ленты, записанной в системе NTSC

Вы можете воспроизводить ленты, записанные в видеосистеме NTSC с использованием режима SP. Если лента записана в системе AFM Hi-Fi, то будет воспроизводиться звучание AFM Hi-Fi. Однако, обратите внимание на то, что следующее будет происходить во время воспроизведения ленты, записанной в системе NTSC.
- При воспроизведении на экране телевизора Вы можете не получить подлинные цвета в зависимости от телевизора. Если Вы воспроизводите ленту на мультисистемном телевизоре, установите NTSC PB на желаемый режим в системе меню.
- Во время воспроизведения черная полоса появляется в нижней части видоискателя.
- Вы не можете воспроизводить ленты, записанные в системе NTSC, в режиме LP ни на ЖКД, ни на экране телевизора.
- Если лента имеет части, записанные в видеосистемах PAL и NTSC, показания счетчика будут неправильные. Это расхождение происходит из-за разницы между расчетом времени двух видеосистем.
- Вы не можете производить монтаж ленты, записанной в системе NTSC, на другой КВМ.



# Tips for using the battery pack / Советы по использованию батарейного блока

This section shows you how you can get the most out of your battery pack.

### Preparing the battery pack

#### Always carry additional batteries

Have sufficient battery pack power to do 2 to 3 times as much recording as you have planned.

#### Battery life is shorter in a cold environment

Battery efficiency is decreased, and the battery will be used up more quickly, if you are recording in a cold environment.

#### To save battery power

Turn STANDBY down when not recording to save battery power.
A smooth transition between scenes can be made even if recording is stopped and started again. While you are positioning the subject, selecting an angle, or looking through the viewfinder lens or on the LCD screen, the lens moves automatically and the battery is used. The battery is also used when a tape is inserted or removed.

### When to replace the battery pack

While you are using your camcorder, the remaining battery indicator decreases gradually as battery power is used up. Remaining time in minutes appears.

When the remaining battery indicator reaches the lowest point, the ⌧ indicator may appear and start flashing in the viewfinder or on the LCD screen.
When the ⌧ indicator changes from slow flashing to rapid flashing while you are recording, set the POWER switch to OFF on the camcorder and replace the battery pack. Leave the tape in the camcorder to obtain a smooth transition between scenes after the battery pack has been replaced.

Данный раздел показывает, как Вы можете получить наибольшую отдачу от Вашего батарейного блока

### Подготовка батарейного блока

#### Всегда носите дополнительные батарейные блоки

Имейте достаточный заряд батарейного блока для выполнения записи в 2 – 3 раза больше, чем Вы запланировали.

#### Срок службы заряда батарейного блока будет короче в холодных условиях

Эффективность батарейного блока снижается, и заряд батарейного блока используется быстрее, если Вы производите запись в холодных условиях.

#### Для экономии заряда батарейного блока

Поверните STANDBY вниз, когда Вы не производите запись для экономии заряда батарейного блока.
Плавный переход между сценами может быть выполнен, даже если запись была остановлена и начата снова. Когда Вы позиционируете объект, выбираете угол или смотрите в объектив видоискателя или на экран ЖКД, объектив перемещается автоматически, и батарейный блок будет использоваться. Батарейный блок также используется при вставке и удалении ленты.

### Когда заменять батарейный блок

Когда Вы используете видеокамеру, индикатор оставшегося заряда батарейного блока постепенно уменьшается по мере использования заряда батарейного блока. Также появляется оставшееся время в минутах.

Когда индикатор оставшегося заряда батарейного блока достигает наинизшей точки, индикатор ⌧ появляется и начинает мигать в видоискателе или на экране ЖКД. Когда индикатор ⌧ изменяет медленное мигание на быстрое мигание во время записи, установите выключатель POWER в положение OFF на видеокамере и замените батарейный блок. Оставьте ленту в видеокамере для получения плавного перехода между сценами после замены батарейного блока.

Additional information / Дополнительная информация





### Notes on the rechargeable battery pack

#### Caution

Never leave the battery pack in temperatures above 60°C (140°F), such as in a car parked in the sun or under direct sunlight.

#### The battery pack heats up

During charging or recording, the battery pack heats up. This is caused by energy that has been generated and a chemical change that has occurred inside the battery pack. This is not cause for concern and is normal.

#### Be sure to observe the following

- Keep the battery pack away from fire.
- Keep the battery pack dry.
- Do not open nor try to disassemble the battery pack.
- Do not expose the battery pack to any mechanical shock.

#### The life of the battery pack

If the battery indicator flashes rapidly just after turning on the camcorder with a fully charged battery pack, the battery pack should be replaced with a new fully charged one.

#### Charging temperature

You should charge batteries at temperatures from 10°C to 30°C (from 50°F to 86°F). Lower temperatures require a longer charging time.

### Примечания к перезаряжаемому батарейному блоку

#### Предостережение

Никогда не оставляйте батарейный блок при температуре свыше 60°C (140°F), как например, в автомобиле, припаркованном на солнце, или под прямыми солнечными лучами.

#### Батарейный блок нагревается

Во время зарядки или записи батарейный блок нагревается. Это вызвано генерируемой энергией и химическими реакциями, которые происходят внутри батарейного блока. Это не должно быть причиной для беспокойства и является нормальным.

#### Обязательно соблюдайте следующее

- Храните батарейный блок подальше от огня.
- Храните батарейный блок сухим.
- Не пытайтесь открыть или разобрать батарейный блок.
- Не подвергайте батарейный блок никаким механическим ударам.

#### Срок службы батарейного блока

Если индикатор батарейного блока мигает быстро сразу после включения видеокамеры с полностью заряженным батарейным блоком, батарейный блок должен быть заменен новым полностью заряженным батарейным блоком.

#### Температура зарядки

Вы должны заряжать батарейный блок при температуре от 10°C до 30°C (от 50°F до 86°F). Более низкая температура требует более длительного времени зарядки.

## Notes on the "InfoLITHIUM" battery pack

### What is "InfoLITHIUM"

The "InfoLITHIUM" is a lithium ion battery pack which can exchange data with compatible video equipment about its battery consumption. Sony recommends that you use the "InfoLITHIUM" battery pack with video equipment having the (i) mark.

When you use this battery pack with video equipment having the (i) mark, the video equipment will indicate the remaining battery time in minutes*. However, if you use it with video equipment not having this mark, the remaining battery capacity will not be indicated in minutes.

"InfoLITHIUM" is a trademark of Sony Corporation.

* The indication may not be accurate depending on the condition and environment which the equipment is used under.

### How the battery consumption is displayed

The power consumption of the camcorder changes depending on its use, such as how the autofocusing is working.

While checking the condition of the camcorder, the "InfoLITHIUM" battery pack measures the battery consumption and calculates the remaining battery power. If the condition changed drastically, the remaining battery indication may suddenly decrease or increase by more than 2 minutes.

Even if 5 to 10 minutes is indicated as the battery remaining time on the LCD screen or in the viewfinder, the ⌧ indicator may also flash under some condition.

## Примечания к батарейному блоку "InfoLITHIUM"

### Что такое "InfoLITHIUM"

"InfoLITHIUM" является литиево-ионным батарейным блоком, который может обмениваться данными с совместимой видеоаппаратурой относительно расхода заряда батарейного блока. Фирма Sony рекомендует, чтобы Вы использовали батарейный блок "InfoLITHIUM" с видеоаппаратурой, имеющей знак (i). При использовании данного батарейного блока с видеоаппаратурой, имеющей знак (i), видеоаппаратура будет показывать оставшееся время заряда батарейного блока в минутах*. Однако, если Вы используете его с видеоаппаратурой, не имеющей такого знака, оставшаяся емкость батарейного блока не указывается в минутах.

"InfoLITHIUM" является товарным знаком корпорации Sony.

* Показание можеть быть неточным, в зависимости от условий и окружающей среды при которых используется аппаратура.

### Как отображается расход заряда батарейного блока

Потребляемая мощность видеокамерой изменяется в зависимости от условий ее использования, как например, работает ли автоматическая фокусировка.

Во время проверки состояния видеокамеры батарейный блок "InfoLITHIUM" измеряет расход батарейного заряда и вычисляет оставшийся заряд батарейного блока. Если условия использования сильно изменяются, индикация оставшегося заряда батарейного блока может резко уменьшиться или увеличиться более чем на 2 минуты.

Даже если 5 или 10 минут указано на экране ЖКД или в видоискателе в качестве оставшегося времени заряда батарейного блока, индикатор ⌧ может все же мигать при некоторых условиях.

Additional information | Дополнительная информация





### To obtain more accurate remaining battery indication

Set the camcorder to recording standby mode and point towards a stationary object. Do not move the camcorder for 30 seconds or more.

- If the indication seems incorrect, recharge it fully (Full charge[1]). Note that if you have used the battery in a hot or cold environment for long time, or you have repeated charging many times, the battery pack may not be able to show the correct time even after being fully charged.
- After you have used the "InfoLITHIUM" battery pack with an equipment not having the (i) mark, make sure that you use up the battery pack on the equipment having the (i) mark and then recharge fully.

### Why the remaining battery indication does not match the continuous recording time in the operating instructions

The recording time is affected by the environmental temperature and conditions. The recording time becomes very short in a cold environment. The continuous recording time in the operating instructions is measured under the condition of using a fully charged (or normal charged) battery pack in 25°C (77°F). As the environmental temperature and condition are different when you actually use the camcorder, the remaining battery time is not same as the continuous recording time in the operating instructions.

[1] Full charge: Charging until FULL appears in the display window.

### Для получения более точной индикации оставшегося заряда батарейного блока

Установите видеокамеру на режим готовности записи и наведите ее на неподвижный объект. Не двигайте видеокамеру в течение 30 секунд или более.

- Если индикация кажется неправильной, полностью зарядите батарейный блок (полная зарядка[1]). Имейте в виду, что если Вы использовали батарейный блок в жарких или холодных окружающих условиях в течение длительного времени, или если Вы повторяли зарядку много раз, батарейный блок может не показывать правильное время даже после полной зарядки.
- После использования батарейного блока "InfoLITHIUM" с аппаратурой, которая не имеет знака (i) обязательно используйте заряд батарейного блока до конца с аппаратурой, имеющей знак (i), а затем полностью зарядите его.

### Почему индикация оставшегося заряда батарейного блока не соответствует времени непрерывной записи, указанном в инструкции по эксплуатации

На время записи влияет температура окружающей среды и другие условия. Время записи становится очень коротким в холодных условиях. Время непрерывной записи, указанное в инструкции по эксплуатации, измерено в условиях использования полностью заряженного батарейного блока (или нормально заряженного) при температуре 25°C (77°F). Так как температура окружающей среды и другие условия отличаются от реальных условий использования видеокамеры, то время оставшегося заряда батарейного блока будет не таким, как время непрерывной записи, указанное в инструкции по эксплуатации.

[1] Полная зарядка: Зарядка до тех пор, пока FULL не появится в окошке дисплея.





## Moisture condensation

If the camcorder is brought directly from a cold place to a warm place, moisture may condense inside the camcorder, on the surface of the tape, or on the lens. In this condition, the tape may stick to the head drum and be damaged or the unit may not operate correctly. To prevent possible damage under these circumstances, the camcorder is furnished with moisture sensors. Please, take the following precautions.

### Inside the camcorder

If there is moisture inside the camcorder, the beep sounds and the ⧈ indicator flashes. If this happens, none of the functions except cassette ejection will work. Open the cassette compartment, turn off the camcorder, and leave it about 1 hour. When ⏏ indicator flashes at the same time, the cassette is inserted in the camcorder. Eject the cassette, turn off the camcorder, and leave also the cassette about 1 hour. The camcorder can be used again if the ⧈ indicator does not appear when the power is turned on again.

### On the lens

If moisture condenses on the lens, no indicator appears, but the picture becomes dim. Turn off the power and do not use the camcorder for about 1 hour.

### How to prevent moisture condensation

When bringing the camcorder from a cold place to a warm place, put the camcorder in a plastic bag and allow it to adapt to room conditions over a period of time.

(1) Be sure to tightly seal the plastic bag containing the camcorder.
(2) Remove the bag when the air temperature inside it has reached the temperature surrounding it (after about 1 hour).

## Конденсация влаги

Если видеокамера принесена прямо из холодного места в теплое место, влага может сконденсироваться внури видеокамеры, на поверхности ленты или на объективе. В таком состоянии лента может прилипнуть к барабану головки и будет повреждена, или видеокамера не сможет работать правильно. Для предотвращения возможного повреждения ввиду таких обстоятельств, видеокамера снабжена датчиками влаги. Соблюдайте следующие предосторожности.

### Внутри видеокамеры

Если внутри видеокамеры произошла конденсация влаги, то будет звучать зуммерный сигнал, и индикатор ⧈ будет мигать. Если это случилось, то никакие функции, кроме выталкивания кассеты, не будут работать. Откройте кассетный отсек, выключите видеокамеру и оставьте ее приблизительно на 1 час. Если индикатор ⏏ будет мигать в то же самое время, то значит кассета вставлена в видеокамеру. Вытолкните кассету, выключите видеокамеру и оставьте кассету приблизительно на 1 час. Видеокамера снова может быть использована, если индикатор ⧈ не будет появляться после включения питания.

### На объективе

Если влага сконденсировалась на объективе, никакие индикаторы появляться не будут, но изображение станет тусклым. Выключите питание и не используйте видеокамеру приблизительно 1 час.

### Как предотвратить конденсацию влаги

Если видеокамера принесена из холодного места в теплое место, то положите видеокамеру в полиэтиленовый пакет и дайте ей адаптироваться к комнатным условиям за некоторый период времени.

(1) Обязательно плотно закройте полиэтиленовый пакет, содержащий камеру.
(2) Выньте камеру, когда температура воздуха внутри пакета достигнет температуры окружающего воздуха (приблизительно через 1 час).

Additional information | Дополнительная информация





## Video head cleaning

To ensure normal recording and clear pictures, clean the video heads. When the ⊗ indicator and "CLEANING CASSETTE" message appear one after another or playback pictures are "noisy" or hardly visible, the video heads may be dirty.

[a] Slightly dirty
[b] Very dirty

If this happens, clean the video heads with the Sony V8-25CLH/V8-25CLD cleaning cassette (not supplied). After checking the picture, if it is still "noisy," repeat the cleaning. (Do not repeat cleaning more than 5 times in one session.)

### Caution

Do not use a commercially available wet-type cleaning cassette. It may damage the video heads.

### Note

If the Sony V8-25CLH/V8-25CLD cleaning cassette is not available in your area, consult your nearest Sony dealer.

## Очистка видеоголовок

Для обеспечения нормальной записи и четкого изображения очищайте видеоголовки. Когда индикатор ⊗ и сообщение "CLEANING CASSETTE" появляются одно за другим или воспроизводимое изображение будет "зашумленным" или трудно просматриваемым, видеоголовки наверное загрязнены.

[a] Слегка загрязнены
[b] Очень загрязнены

Если это случится, очистите видеоголовки с помощью очистительной кассеты фирмы Sony V8-25CLH/V8-25CLD (не прилагается). После проверки изображения, если оно все еще "зашумлено", повторите очистку. (Не повторяйте очистку более 5 раз за один прием.)

### Предостережение

Не используйте имеющуюся в продаже очистительную кассету влажного типа. Она может повредить видеоголовки.

### Примечание

Если очистительной кассеты V8-25CLH/V8-25CLD фирмы Sony нет в продаже в Вашей области, проконсультируйтесь у Вашего ближайшего дилера Sony.

### Removing dust from inside the viewfinder

(1) Remove the screw with a screwdriver (not supplied). Then, while sliding the RELEASE knob, turn the eyecup in the direction of the arrow and pull it out.
(2) Clean the surface with a commercially available blower.

### Удаление пыли из видоискателя

(1) Снимите винт с помощью отвертки (не прилагается). Затем сдвигая ручку RELEASE, поверните окуляр в направлении стрелки и вытащите его.
(2) Очистите поверхность с помощью имеющейся в продаже воздуходувки.

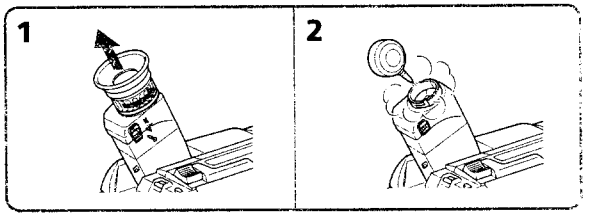


### To reattach the eyecup

(1) Align the groove on the eyecup with the • mark on the barrel.
(2) Turn the eyecup in the direction of the arrow. Then replace the screw.

### Для присоединения окуляра

(1) Совместите канавку на окуляре с меткой • на корпусе.
(2) Поверните окуляр в направлении стрелки. Затем установите на место винт.

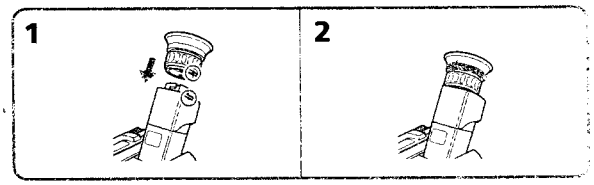


**Caution**
Do not remove any other screws. You may remove only the screw to remove the eyecup.

**Предостережение**
Не снимайте никаких других винтов. Вы можете открутить только винт для снятия окуляра.







## Precautions

### Camcorder operation

- Operate the camcorder on 7.2 V (battery pack) or 8.4 V (AC power adaptor).
- For DC or AC operation, use the accessories recommended in this manual.
- Should any solid object or liquid get inside the casing, unplug the camcorder and have it checked by a Sony dealer before operating it any further.
- Avoid rough handling or mechanical shock. Be particularly careful of the lens.
- Keep the POWER switch setting to OFF when not using the camcorder.
- Do not wrap up the camcorder and operate it since heat may build up internally.
- Keep the camcorder away from strong magnetic fields or mechanical vibration.
- Do not push the LCD screen.
- If the camcorder is used in a cold place, a residual image may appear on the LCD screen. This is not a malfunction.
- While using the camcorder, the back of the LCD screen may heat up. This is not a malfunction.

### On handling tapes

Do not insert anything in the small holes on the rear of the cassette. These holes are used to sense the type of tape, thickness of tape and if the recording tab is in or out.

## Предосторожности

### Эксплуатация видеокамеры

- Эксплуатируйте видеокамеру от 7,2 В (батарейный блок) или 8,4 В (сетевой адаптер перем. тока).
- Для эксплуатации от постоянного тока или переменного тока используйте принадлежности, рекомендованные в данном руководстве.
- Если какой-нибудь твердый предмет или жидкость попали в корпус, то выключите видеокамеру и проверьте ее у дилера Sony перед дальнейшей ее эксплуатацией.
- Избегайте грубого обращения или механических ударов. Будьте особенно осторожны с объективом.
- Держите выключатель POWER в положении OFF, когда видеокамера не используется.
- Не заворачивайте видеокамеру и не эксплуатируйте ее в таком состоянии, так как может произойти внутреннее повышение температуры.
- Держите видеокамеру подальше от сильных магнитных полей или механической вибрации.
- Не нажимайте на экран ЖКД.
- Если видеокамера используется в холодном месте, то послеизображения могут появляться на экране ЖКД. Это не является неисправностью.
- Во время использования видеокамеры тыльная часть экрана ЖКД может нагреться. Это не является неисправностью.

### Относительно обращения с лентами

Не вставляйте ничего в маленькие отверстия на задней стороне кассеты. Эти отверстия используются для определения типа ленты, толщины ленты и наличия лепестка записи.





### Camcorder care

- When the camcorder is not to be used for a long time, remove the tape. Periodically turn on the power, operate the camera and player sections and play back a tape for about 3 minutes.
- If fingerprints or debris make the LCD screen dirty, we recommend using a LCD Cleaning Kit (not supplied) to clean the LCD screen.
- Clean the lens with a soft brush to remove dust. If there are fingerprints on it, remove them with a soft cloth.
- Clean the camcorder body with a dry soft cloth, or a soft cloth lightly moistened with a mild detergent solution. Do not use any type of solvent which may damage the finish.
- Do not let sand get into the camcorder. When you use the camcorder on a sandy beach or in a dusty place, protect it from the sand or dust. Sand or dust may cause the unit to malfunction, and sometimes this malfunction cannot be repaired.

### AC power adaptor

- Unplug the unit from the mains when not in use for a long time. To disconnect the mains lead, pull it out by the plug. Never pull the mains lead itself.
- Do not operate the unit with a damaged cord or if the unit has been dropped or damaged.
- Do not bend the mains lead forcibly, or put a heavy object on it. This will damage the cord and may cause a fire or electrical shock.
- Be sure that nothing metallic comes into contact with the metal parts of the connecting plate. If this happens, a short may occur and the unit may be damaged.
- Always keep the metal contacts clean.
- Do not disassemble the unit.

### Уход за видеокамерой

- Когда видеокамера не используется в течение длительного времени, удалите ленту. Периодически включайте питание, работайте с секциями камеры и плейера и воспроизводите ленту приблизительно в течение 3-х минут.
- Если отпечатки пальцев или мусор сделают экран ЖКД грязным, то мы рекомендуем использование очистительного набора для ЖКД (не прилагается) для очистки экрана ЖКД.
- Очищайте объектив с помощью мягкой кисточки для удаления грязи. Если имеются отпечатки пальцев на объективе, то удалите их с помощью мягкой ткани.
- Очищайте корпус аппарата с помощью сухой мягкой ткани или мягкой ткани, слегка смоченной раствором умеренного моющего средства. Не используйте каких-либо типов растворителей, которые могут повредить отделку.
- Не позволяйте песку попасть в видеокамеру. Когда Вы используете видеокамеру на песчаном пляже или в пыльном месте, предохраняйте ее от песка и пыли. Песок и пыль могут вызвать неисправность аппарата, и иногда такая неисправность может не подлежать ремонту.

### Сетевой адаптер перем. тока

- Отсоедините аппарат от электрической сети, если он не используется длительное время. Для отсоединения сетевого провода вытащите его за разъем. Никогда не тяните за сам сетевой провод.
- Не эксплуатируйте аппарат с поврежденным проводом, или если аппарат упал или был поврежден.
- Не сгибайте сетевой провод силой и не ставьте на него тяжелые предметы. Это повредит провод и может привести к пожару или удару электрическим током.
- Убедитесь, что никакие металлические предметы не соприкасаются с металлическими частями соединительной пластины. Если это случится, может произойти короткое замыкание, и аппарат может быть поврежден.
- Всегда поддерживайте металлические контакты в чистоте.
- Не разбирайте аппарат.







- Do not apply mechanical shock or drop the unit.
- While the unit is in use, particularly during charging, keep it away from AM receivers and video equipment because it will disturb AM reception and video operation.
- The unit becomes warm while in use. This is normal.
- Do not place the unit in locations that are:
  - Extremely hot or cold
  - Dusty or dirty
  - Very humid
  - Vibrating

### Notes on dry batteries

To avoid possible damage from battery leakage or corrosion, observe the following.

- Be sure to insert the batteries in the correct direction.
- Dry batteries are not rechargeable.
- Do not use a combination of new and old batteries.
- Do not use different types of batteries.
- The batteries slowly discharge while not in use.
- Do not use a battery that is leaking.

**If battery leakage occurred**

- Wipe off the liquid in the battery case carefully before replacing the batteries.
- If you touch the liquid, wash it off with water.
- If the liquid get into your eyes, wash your eyes with a lot of water and then consult a doctor.

If any difficulty should arise, unplug the unit and contact your nearest Sony dealer.

- Не подвергайте аппарат механическим ударам и не роняйте его.
- Когда аппарат используется, особенно во время зарядки, держите его подальше от радиоприемников AM и видеоаппаратуры, потому что он будет нарушать прием AM и работу видеоаппаратуры.
- Аппарат становится теплым во время зарядки. Это является нормальным.
- Не размещайте аппарат в местах, которые:
  - Чрезмерно жаркие или холодные
  - Пыльные или грязные
  - Очень влажные
  - Подвержены вибрации

### Примечания к сухим батарейкам

Во избежание возможного повреждения из-за протечки батареек или корроизии соблюдайте следующее.

- Обязательно вставьте батарейки с правильным направлением.
- Сухие батарейки не являются перезаряжаемыми.
- Не используйте комбинацию старых и новых батареек.
- Не используйте различные типы батареек.
- Батарейки медленно разряжаются, даже если не используются.
- Не используйте батарейку, которая протекла.

**Если случится протечка батареек**

- Тщательно вытрите жидкость в батарейном отсеке перед установкой батареек.
- Если Вы дотронетесь до жидкости, то промойте это место водой.
- Если жидкость попала Вам в глаза, то промойте Ваши глаза большим количеством воды, а затем обратитесь к врачу.

В случае возникновения каких-либо трудностей, отключите аппарат и обратитесь к Вашему ближайшему дилеру Sony.

## Using your camcorder abroad

Each country or area has its own electric and TV colour systems. Before using your camcorder abroad, check the following points.

### Power sources

You can use your camcorder in any country or area with the supplied AC power adaptor within 100 V to 240 V AC, 50/60 Hz.

### Difference in colour systems

This camcorder is a PAL system based camcorder. If you want to view the playback picture on a TV, it must be a PAL system based TV.
Check the following list.

**PAL system**
Australia, Austria, Belgium, China, Czech Republic, Denmark, Finland, Germany, Great Britain, Holland, Hong Kong, Italy, Kuwait, Malaysia, New Zealand, Norway, Portugal, Singapore, Slovak Republic, Spain, Sweden, Switzerland, Thailand, etc.

**PAL-M system**
Brazil

**PAL-N system**
Argentina, Paraguay, Uruguay

**NTSC system**
Bahama Islands, Bolivia, Canada, Central America, Chile, Colombia, Ecuador, Jamaica, Japan, Korea, Mexico, Peru, Surinam, Taiwan, the Philippines, the U.S.A., Venezuela, etc.

**SECAM system**
Bulgaria, France, Guyana, Hungary, Iran, Iraq, Monaco, Poland, Russia, Ukraine, etc.

## Использование Вашей видеокамеры за границей

Каждая страна или область имеет свои собственные системы электрической сети и цветного телевидения. Перед использованием Вашей видеокамеры за границей проверьте следующие пункты.

### Источники питания

Вы можете использовать видеокамеру в любой стране или области с помощью прилагаемого сетевого адаптера перем. тока в пределах от 100 В до 240 В перем. тока, 50/60 Гц.

### Различия в системах цветного телевидения

Данная видеокамера основана на системе PAL. Если Вы хотите просмотреть воспроизводимое изображение на телевизоре, то это должен быть телевизор, основанный на системе PAL.
Проверьте по следующему перечню.

**Система PAL**
Австралия, Австрия, Бельгия, Великобритания, Германия, Голландия, Гонконг, Дания, Испания, Италия, Китай, Кувейт, Малайзия, Новая Зеландия, Норвегия, Португалия, Сингапур, Словацкая Республика, Тайланд, Финляндия, Чешская Республика, Швейцария, Швеция и т.д.

**Система PAL-M**
Бразилия

**Система PAL-N**
Аргентина, Парагвай, Уругвай

**Система NTSC**
Багамские острова, Боливия, Венесуэла, Канада, Колумбия, Корея, Мексика, Перу, Суринам, США, Тайвань, Филиппины, Центральная Америка, Чили, Эквадор, Ямайка, Япония и т.д.

**Система SECAM**
Болгария, Венгрия, Гайяна, Ирак, Иран, Монако, Польша, Россия, Украина, Франция и т.д.

Additional information / Дополнительная информация



## English
## Self-diagnosis display

The camcorder has a self-diagnosis display. This function displays the camcorder's condition with five digits (a combination of a letter and figures) in the viewfinder or on the LCD screen. If this occurs, check the following code chart. The five-digit display informs you of the camcorder's current condition. The last two digits (indicated by □□) will differ depending on the state of the camcorder.

**LCD screen**

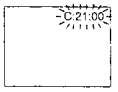


**Self-diagnosis display**
- C:□□:□□
  You can service the camcorder yourself.
- E:□□:□□
  Contact your Sony dealer or local autorized Sony facility.

| Five-digit display | Cause and/or Corrective Actions |
|---|---|
| C:21:□□ | • Moisture condensation has occurred.<br>→ Remove the cassette and leave the camcorder for at least 1 hour. (p. 83) |
| C:22:□□ | • The video heads are dirty.<br>→ Clean the heads using the Sony V8-25CLH/V8-25CLD cleaning cassette (not supplied). (p. 84) |
| C:23:□□ | • You are using a battery pack that is not an "InfoLITHIUM" battery pack.<br>→ Use an "InfoLITHIUM" battery pack. (p. 81) |
| C:31:□□<br>C:32:□□ | • A servicable situation not malfunctioned above has occurred.<br>→ Remove the cassette and insert it again, then operate the camcorder.<br>→ Disconnect the mains lead of the AC power adaptor or remove the battery pack. After reconnecting the power source, operate the camcorder. |
| E:61:□□<br>E:62:□□ | • A camcorder malfunction which you cannot service has occurred.<br>→ Contact your Sony dealer or local authorized Sony service facility and inform them of the five digits. (example: E:61:10) |

If you are unable to resolve the problem, contact your Sony dealer or local authorized Sony service facility.

## Русский
## Дисплей самодиагностики

Видеокамера имеет дисплей самодиагностики.
Данная функция отображает состояние видеокамеры с помощью пяти знаков (комбинация буквы и цифр) в видоискателе или на экране ЖКД. Если это случится, проверьте следующую кодовую таблицу. Последние две цифры (указанных как □□) будут различаться в зависимости от состояния видеокамеры.

**Экран ЖКД**

**Дисплей самодиагностики**
- C:□□:□□
  Вы можете выполнить техническое обслуживание видеокамеры самостоятельно.
- E:□□:□□
  Свяжитесь с Вашим дилером Sony или местным уполномоченным предприятием Sony.

| Пятизначный дисплей | Вероятная причина и/или метод устранения. |
|---|---|
| C:21:□□ | • Произошла конденсация влаги.<br>→ Выньте кассету и оставьте видеокамеру по меньшей мере на 1 час. (стр. 83) |
| C:22:□□ | • Грязные видеоголовки.<br>→ Очистите видеоголовки с использованием очистительной кассеты V8-25CLH/V8-25CLD фирмы Sony (не прилагается). (стр. 84) |
| C:23:□□ | • Вы используете батарейный блок, который не является батарейным блоком "InfoLITHIUM".<br>→ Используйте батарейный блок "InfoLITHIUM". (стр. 81) |
| C:31:□□<br>C:32:□□ | • Состояние для обслуживания не вызвано вышеописанными проблемами.<br>→ Выньте кассету и вставьте ее снова, а затем управляйте видеокамерой.<br>→ Отсоедините провод электропитания сетевого адаптера переменного тока или удалите батарейный блок. После обратного подсоединения источника питания управляйте видеокамерой. |
| C:61:□□<br>C:62:□□ | • Случилась неисправность видеокамеры, для которой Вы не можете выполнить техническое обслуживание.<br>→ Свяжитесь с Вашим дилером Sony или местным уполномоченным предприятием Sony и проинформируйте их о появлении пяти знаков. (Например: E:61:10) |

Если Вы не можете решить проблему, то свяжитесь с Вашим дилером Sony или местным уполномоченным предприятием Sony.

Additional information / Дополнительная информация



## Identifying the parts / Опознавание частей

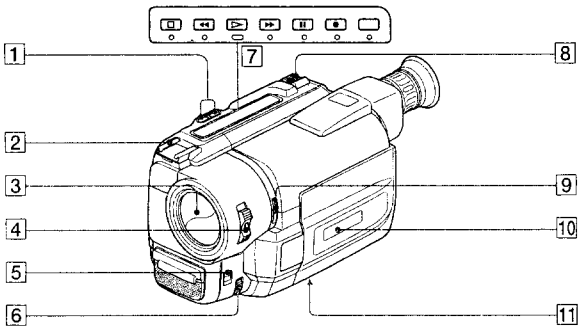


1 **EDITSEARCH button** (p. 24)
2 **Intelligent accessory shoe** (p. 104)
3 **Lens cover**
4 **POWER switch** (p. 14)
5 **FOCUS switch** (p. 57)
6 **NEAR/FAR dial** (p. 57)
7 **Video control buttons** (p. 26)
- ■ STOP (stop)
- ◄◄ REW (rewind)
- ► PLAY (playback)
- ►► FF (fastforward)
- ❚❚ PAUSE (pause)
- ● REC (recording)

8 **Power zoom lever** (p. 17)
9 **NIGHTSHOT switch** (p. 42)
10 **Display window** (p. 108)
11 **Tripod receptacle** (p. 23)
Make sure that the length of the tripod screw is less than 6.5 mm (9/32 inch) otherwise, you cannot attach the tripod securely and the screw may damage the camcorder.

1 **Кнопка EDITSEARCH** (стр. 24)
2 **Башмак для установки вспомогательного оборудования** (стр. 104)
3 **Крышка объектива**
4 **Выключатель POWER** (стр. 14)
5 **Переключатель FOCUS** (стр. 57)
6 **Диск NEAR/FAR** (стр. 57)
7 **Кнопки видеоконтроля** (стр. 26)
- ■ STOP (остановка)
- ◄◄ REW (ускоренная перемотка назад)
- ► PLAY (воспроизведение)
- ►► FF (ускоренная перемотка вперед)
- ❚❚ PAUSE (пауза)
- ● REC (запись)

8 **Рычаг приводного трансфокатора** (стр. 17)
9 **Выключатель NIGHTSHOT** (стр. 42)
10 **Окошко дисплея** (стр. 108)
11 **Держатель треноги** (стр. 23)
Убедитесь, что длина винта треноги менее 6,5 мм (9/32 дюйма). В противном случае Вы не сможете надержно подсоединить треногу, а винт может повредить видеокамеру.

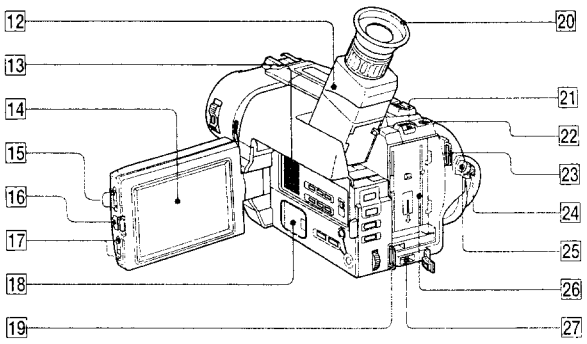


12 **Viewfinder** (p. 15)
13 **Speaker** (p. 27)
14 **LCD screen** (p. 20)
15 **LCD BRIGHT buttons** (p. 20)
16 **OPEN button** (p. 19)
17 **VOLUME buttons** (p. 26)
18 **Lithium battery compartment** (p. 74)
19 **Hook for shoulder strap** (p. 107)
20 **Eyecup**
21 **BATT RELEASE lever** (p. 8, 12)
22 **PHOTO button** (CCD-TRV55E only) (p. 43)
23 **Hook for shoulder strap** (p. 107)
24 **STANDBY switch** (p. 14)
25 **START/STOP button** (p. 14)
26 **Battery mounting surface**
27 **DC IN jack** (p. 9, 30)

12 **Видоискатель** (стр. 15)
13 **Громкоговоритель** (стр. 27)
14 **Экран ЖКД** (стр. 20)
15 **Кнопки LCD BRIGHT** (стр. 20)
16 **Кнопка OPEN** (стр. 19)
17 **Кнопки VOLUME** (стр. 26)
18 **Отсек литиевой батарейки** (стр. 74)
19 **Скоба для плечевого ремня** (стр. 107)
20 **Окуляр**
21 **Рычаг BATT RELEASE** (стр. 8, 12)
22 **Кнопка PHOTO** (только CCD-TRV55E) (стр. 43)
23 **Скоба для плечевого ремня** (стр. 107)
24 **Переключатель STANDBY** (стр. 14)
25 **Кнопка START/STOP** (стр. 14)
26 **Поверхность установки батарейного блока**
27 **Гнездо DC IN** (стр. 9, 30)

Additional information Дополнительная информация



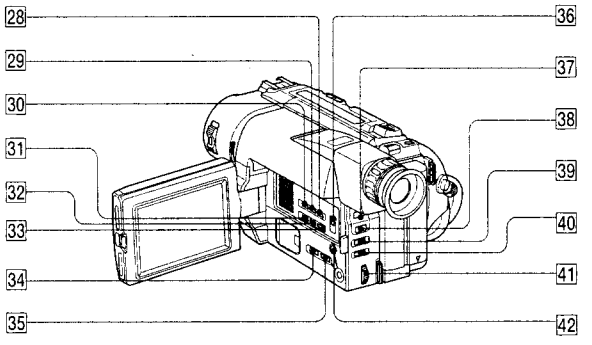


28 **COUNTER RESET button** (p. 16)
29 **TIME button** (p. 66)
30 **DATE button** (p. 66)
31 **DISPLAY button** (p. 27)
32 **TITLE button** (p. 62)
33 **END SEARCH button** (p. 29)
34 **DIGITAL EFFECT button** (CCD-TRV55E only) (p. 49)
35 **PICTURE EFFECT button** (p. 59)
36 **START/STOP MODE switch** (p. 19)
37 **FADER button** (p. 40)
38 **BACK LIGHT button** (p. 38)
39 **PROGRAM AE button** (p. 48)
40 **EXPOSURE button** (p. 60)
41 **Control dial** (p. 32)
42 **MENU button** (p. 32)

28 **Кнопка COUNTER RESET** (стр. 16)
29 **Кнопка TIME** (стр. 66)
30 **Кнопка DATE** (стр. 66)
31 **Кнопка DISPLAY** (стр. 27)
32 **Кнопка TITLE** (стр. 62)
33 **Кнопка END SEARCH** (стр. 29)
34 **Кнопка DIGITAL EFFECT** (только CCD-TRV55E) (стр. 49)
35 **Кнопка PICTURE EFFECT** (стр. 59)
36 **Переключатель START/STOP MODE** (стр. 19)
37 **Кнопка FADER** (стр. 40)
38 **Кнопка BACK LIGHT** (стр. 38)
39 **Кнопка PROGRAM AE** (стр. 48)
40 **Кнопка EXPOSURE** (стр. 60)
41 **Регулировочный диск** (стр. 32)
42 **Кнопка MENU** (стр. 32)





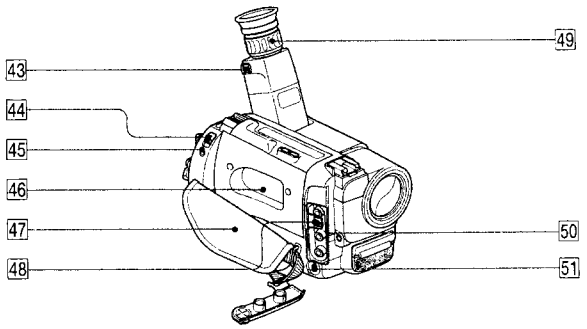


43 **Eyecup RELEASE knob** (p. 85)
44 **EJECT switch** (p. 13)
45 **LANC control jack**
stands for Local Application Control Bus System. The control jack is used for controlling the tape transport of video equipment and peripherals connected to it. This jack has the same function as the jack indicated as CONTROL L or REMOTE.
46 **Cassette compartment** (p. 13)
47 **Grip strap** (p. 22)
48 **RFU DC OUT (RFU adaptor DC output) jack** (p. 69)
49 **Viewfinder lens adjustment ring** (p. 15)
50 **VIDEO/AUDIO jacks** (p. 69)
51 **(headphones) jack** (p. 27)

43 **Ручка окуляра RELEASE** (стр. 85)
44 **Выключатель EJECT** (стр. 13)
45 **Гнездо управления LANC**
означает систему канала местного управления. Гнездо управления используется для контроля за перемещением ленты видеооборудования и периферийных устройств, подключенных к нему. Данное гнездо имеет такую же функцию, как и разъемы, обозначенные как CONTROL L или REMOTE.
46 **Кассетный отсек** (стр. 13)
47 **Ременной захват** (стр. 22)
48 **Гнездо RFU DC OUT (выход пост. тока ВЧ-адаптера)** (стр. 69)
49 **Кольцо регулировки объектива видоискателя** (стр. 15)
50 **Гнезда VIDEO/AUDIO** (стр. 69)
51 **Гнездо (головных телефонов)** (стр. 27)

Additional information Дополнительная информация



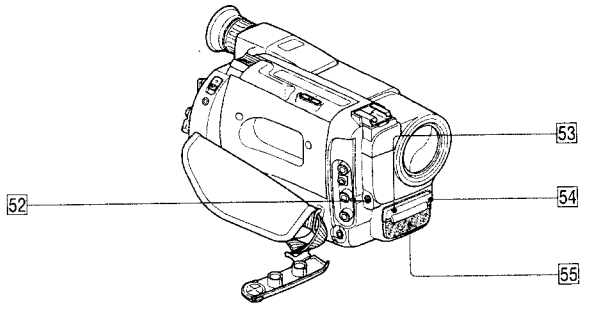


52 **MIC jack (PLUG IN POWER)**
Connect an external microphone (not supplied). This jack also accepts a "plug-in-power" microphone.
53 **Camera recording/battery lamp** (p. 14)
54 **Remote sensor** (p. 105)
Aim the Remote Commander here for remote control.
55 **Microphone**

**Note on the intelligent accessory shoe**
Supplies power to optional accessories such as a video light or microphone. The intelligent accessory shoe is linked to the STANDBY switch, allowing you to turn on and off the power supplied by the shoe. Refer to the instruction manual of the accessory for further information.
To connect an accessory, press down and push it to the end, and then tighten the screw. To remove an accessory, loosen the screw, and then press down and pull out the accessory.
If the camcorder does not work correctly with using the AC power adaptor, use the battery pack.

52 **Гнездо MIC (PLUG IN POWER)**
Для подсоединения внешнего микрофона (не прилагается). Это гнездо допускает подключение микрофона "с выключателем питания".
53 **Лампочка записи камерой/батареи** (стр. 14)
54 **Дистанционный датчик** (стр. 105)
Нацельте пульт дистанционного управления сюда для дистанционного контроля.
55 **Микрофон**

**Примечание к башмаку для установки вспомогательного оборудования**
Подает питание на дополнительное вспомогательное оборудование, как например видеофонарь или микрофон. Башмак для установки вспомогательного оборудования связан с переключателем STANDBY, что позволяет Вам включать и выключать питание, подаваемое через башмак. Смотрите инструкцию по эксплуатации вспомогательного оборудования для получения дальнейшей информации. Для подсоединения вспомогательного оборудования нажмите его вниз и задвиньте до конца, а затем затяните винт. Для снятия вспомогательного оборудования отпустите винт, а затем нажмите вниз и вытащите вспомогательное оборудование.
Если видеокамера не работает правильно при использовании сетевого адаптера переменного тока, то используйте батарейный блок.

## Remote Commander

The buttons that have the same name on the Remote Commander as on the camcorder function identically.

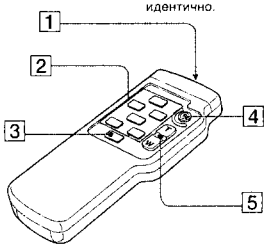


1 **Transmitter**
Point toward the remote sensor to control the camcorder after turning on the camcorder.

2 **Video control buttons** (p. 26)

3 **DISPLAY button** (p. 27)

4 **START/STOP button** (p. 14)

5 **Power zoom button** (p. 17)

**Notes on the Remote Commander**

- Keep the remote sensor away from strong light sources such as direct sunlight or illumination. Otherwise, the remote control may not be effective.
- Be sure that there is no obstacle between the remote sensor on the camcorder and the Remote Commander.
- This camcorder works in commander mode VTR 2. The commander modes (1, 2 and 3) are used to distinguish this camcorder from other Sony VCRs to avoid remote control misoperation. If you use another Sony VCR in commander mode VTR 2, we recommend you change the commander mode or cover the remote sensor of the VCR with black paper.

## Пульт дистанционного управления

Кнопки пульта дистанционного управления, которые имеют одинаковые наименования с кнопками на видеокамере, функционируют идентично.

1 **Передатчик**
Нацельте в направлении дистанционного датчика для управления видеокамерой после ее включения.

2 **Кнопки видеоконтроля** (стр. 26)

3 **Кнопка DISPLAY** (стр. 27)

4 **Кнопка START/STOP** (стр. 14)

5 **Кнопка приводного трансфокатора** (стр. 17)

**Примечания к пульту дистанционного управления**

- Держите дистанционный датчик подальше от сильных источников света, как например, прямые солнечные лучи или иллюминация. В противном случае дистанционное управление может не действовать.
- Убедитесь, что между дистанционным датчиком на видеокамере и пультом дистанционного управления нет препятствия.
- Данная видеокамера работает в режиме пульта дистанционного управления VTR 2. Режимы пульта дистанционного управления (1, 2 и 3) используются для отличия данной видеокамеры от других КВМ фирмы Sony во избежание неправильной работы дистанционного управления. Если Вы используете другой КВМ фирмы Sony, работающий в режиме VTR 2, мы рекомендуем Вам изменить режим пульта дистанционного управления или закрыть дистанционный датчик КВМ черной бумагой.

Additional information Дополнительная информация





**To prepare the Remote Commander**
Insert two R6 (size AA) batteries by matching the + and – on the batteries to the diagram inside the battery compartment.

**Для подготовки пульта дистанционного управления**
Вставьте две батарейки R6 (размером AA) согласуя знаки + и – на батарейках со схемой внутри батарейного отсека.

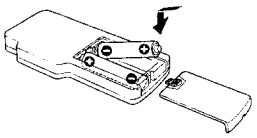

**Note on battery life**
The batteries for the Remote Commander last about 6 months under normal operation. When the batteries become weak or dead, the Remote Commander does not work.

**To avoid damage from possible battery leakage**
Remove the batteries when you will not use the Remote Commander for a long time.

**Примечание к сроку службы батареек**
Батареек для пульта дистанционного управления хватает приблизительно на 6 месяцев при нормальных условиях эксплуатации. Когда батарейки станут слабыми или полностью разрядятся, пульт дистанционного управления не будет работать.

**Во избежание повреждения из-за возможной утечки из батареек.**
Удалите батарейки, если Вы не будете использовать пульт дистанционного управления в течение длительного времени.





## Attaching the shoulder strap

Attach the supplied shoulder strap to the hooks for the shoulder strap.

## Прикрепление плечевого ремня

Прикрепите прилагаемый плечевой ремень к скобам для плечевого ремня.

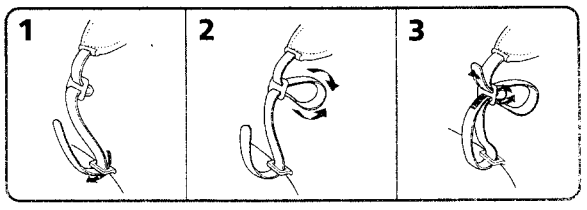


**To watch the demonstration**
You can start the demonstration by setting DEMO MODE in the menu system.
You can also start the demonstration by the following operation.
When NIGHTSHOT is set to ON, you cannot watch the demonstration.

**To enter demo mode**
(1) Eject the cassette and set the POWER switch to VTR.
(2) Turn STANDBY up to STANDBY.
(3) While holding down ► set the POWER switch to CAMERA.

**To exit demo mode**
(1) Set the POWER switch to VTR.
(2) Turn STANDBY up to STANDBY.
(3) While holding down ■ set the POWER switch to CAMERA.

**Для просмотра демонстрации**
Вы можете начать демонстрацию с помощью установки DEMO MODE в системе меню.
Вы также можете начать демонстрацию, выполнив следующую операцию.
Если индикация NIGHTSHOT установлена в положение ON, Вы не сможете наблюдать демонстрацию.

**Для ввода демонстрационного режима**
(1) Удалите кассету и установите выключатель POWER в положение VTR.
(2) Поверните STANDBY вверх в положение STANDBY.
(3) Нажимая вниз ►, установите выключатель POWER в положение CAMERA.

**Для выхода из демонстрационного режима**
(1) Удалите кассету и установите выключатель POWER в положение VTR.
(2) Поверните STANDBY вверх в положение STANDBY.
(3) Удерживая ■ внизу, установите выключатель POWER в положение CAMERA.

Additional information Дополнительная информация





## Operation indicators

**Viewfinder/Видоискатель**

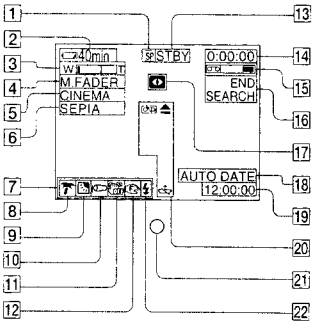


1 **Recording mode indicator** (p. 33)/**Mirror mode indicator** (p. 21)

2 **Remaining battery time indicator**

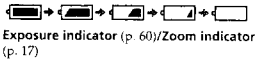

3 **Exposure indicator** (p. 60)/**Zoom indicator** (p. 17)

4 **FADER indicator** (p. 40)/**DIGITAL EFFECT indicator** (CCD-TRV55E only) (p. 49)

5 **Wide mode indicator** (p. 46)

6 **PICTURE EFFECT indicator** (p. 59)

7 **LCD BRIGHT indicator** (p. 20)/**VOLUME indicator** (p. 26)

8 **PROGRAM AE indicator** (p. 47)

9 **Backlight indicator** (p. 38)

10 **WIND indicator** (p. 35)

11 **Steady Shot off indicator** (p. 68)

12 **Manual focusing** (p. 57)

13 **Video control mode** (p. 14)

## Рабочие индикаторы

**Display window/Окошко дисплея**

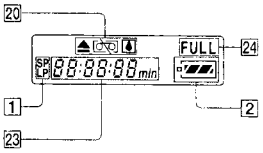


1 **Индикатор рабочего режима** (стр. 33)/**Индикатор зеркального режима** (стр. 21)

2 **Индикатор оставшегося времени заряда батарейного блока**

3 **Индикатор экспозиции** (стр. 60)/**Индикатор трансфокатора** (стр. 17)

4 **Индикатор FADER** (стр. 40)/**Индикатор DIGITAL EFFECT** (только CCD-TRV55E) (стр. 49)

5 **Индикатор широкоформатного режима** (стр. 46)

6 **Индикатор PICTURE EFFECT** (стр. 59)

7 **Индикатор LCD BRIGHT** (стр. 20)/**Индикатор VOLUME** (стр. 26)

8 **Индикатор PROGRAM AE** (стр. 47)

9 **Индикатор задней подсветки** (стр. 38)

10 **Индикатор WIND** (стр. 35)

11 **Индикатор устойчивой съемки** (стр. 68)

12 **Ручная фокусировка** (стр. 57)

13 **Режим видеоконтроля** (стр. 14)

## Identifying the parts

14 **Tape counter** (p. 16)**/Self-diagnosis functions indicator** (p. 96)**/5SEC mode indicator** (p. 19)**/PHOTO mode indicator** (CCD-TRV55E only) (p. 43)

15 **Remaining tape indicator**

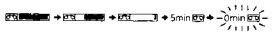

16 **END SEARCH indicator** (p. 25)

17 **NIGHTSHOT indicator** (p. 42)

18 **AUTO DATE indicator** (p. 14)/**Date indicator** (p. 66)

19 **Time indicator** (p. 66)

20 **Warning indicators** (p. 110)

21 **Recording lamp** (p. 14)

22 **Flash indicator** (CCD-TRV55E only) (p. 43)

23 **Date or time indicator** (p. 66)**/Tape counter indicator** (p. 16)**/Self-diagnosis functions indicator** (p. 96)**/Remaining battery time indicator**

24 **FULL charge indicator** (p. 9)

## Опознавание частей

14 **Индикатор счетчика ленты** (стр. 16)**/Индикатор функции самодиагностики** (стр. 97)**/Индикатор режима 5SEC** (стр. 19)**/Индикатор режима PHOTO** (только CCD-TRV55E) (стр. 43)

15 **Индикатор оставшейся ленты**

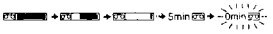

16 **Индикатор END SEARCH** (стр. 25)

17 **Индикатор NIGHTSHOT** (стр. 42)

18 **Индикатор AUTO DATE** (стр. 14)**/Индикатор даты** (стр. 66)

19 **Индикатор времени** (стр. 66)

20 **Предупреждающие индикаторы** (стр. 110)

21 **Лампочка записи** (стр. 14)

22 **Индикатор вспышки** (только CCD-TRV55E) (стр. 43)

23 **Индикатор даты или времени** (стр. 66)**/Индикатор счетчика ленты** (стр. 16)**/Индикатор функции** (стр. 97)**/Индикатор оставшегося времени заряда батарейного блока**

24 **Индикатор зарядки FULL** (стр. 9)

Additional information Дополнительная информация

## Warning indicators

If indicators flash in the viewfinder or in the display window, check the following:
♪♪... : you can hear the beep sound when the BEEP is set to ON.

## Предупреждающие индикаторы

Если индикаторы мигают или предупреждающие сообщения появляются на экране ЖКД или в видоискателе, то проверьте следующее:
♪♪... : Вы можете слышать зуммерный звуковой сигнал, когда функция BEEP установлена на ON в системе меню.

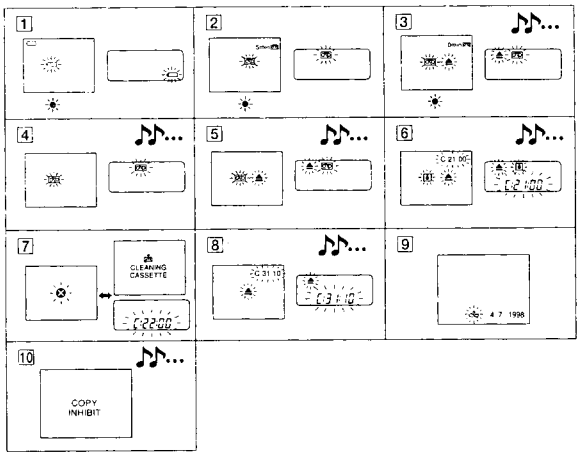


1 **The battery is weak or dead.**
Slow flashing: The battery is weak.
Fast flashing: The battery is dead.

2 **The tape is near the end.**
The flashing is slow.

3 **The tape has run out.**
The flashing becomes rapid.

4 **No tape has been inserted.**

5 **The tab on the tape is out (red).**

1 **Батарейный блок слабый или полностью разряженный.**
Медленное мигание: Батарейный блок слабый.
Быстрое мигание: Батарейный блок полностью разряженный.

2 **Лента приближается к концу.**
Медленное мигание.

3 **Лента закончилась.**
Мигание становится быстрым.

4 **Лента не вставлена.**

5 **На кассете нет лепестка (красная метка).**



## Warning indicators

6 **Moisture condensation has occurred.**

7 **The video heads may be contaminated.**

8 **Some other trouble has occurred.**
Use the self-diagnosis function (p. 96).
If the display does not disappear contact your Sony dealer or local authorized Sony service facility.

9 **The lithium battery is weak or is not installed.**

10 **You tried to record a picture that has a copyright signal.** (p. 72)

## Предупреждающие индикаторы

6 **Произошла конденсация влаги.**

7 **Видеоголовки возможно загрязнены.**

8 **Имеется какая-либо другая проблема.**
Используйте функцию самодиагностики (стр. 97). Если дисплей не исчезает, то свяжитесь с Вашим дилером Sony или местным уполномоченным предприятием.

9 **Литиевая батарейка слабая или не установлена.**

10 **Вы попытались записать изображение, которое содержит контрольные сигналы авторского права.** (стр. 72)

Additional information Дополнительная информация

# SECTION 2
# DISASSEMBLY

The equipment can be removed using the following procedure.

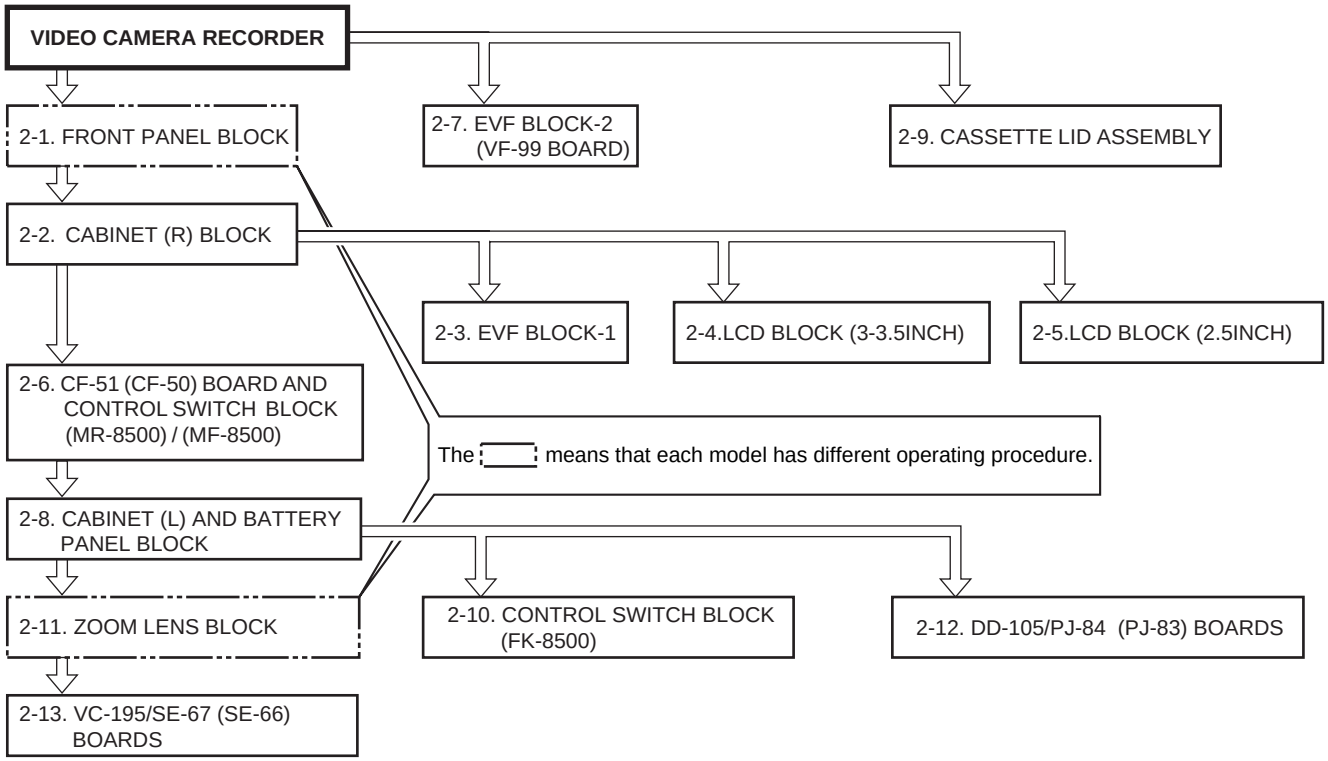
VIDEO CAMERA RECORDER
2-1. FRONT PANEL BLOCK
2-2. CABINET (R) BLOCK
2-6. CF-51 (CF-50) BOARD AND CONTROL SWITCH BLOCK (MR-8500) / (MF-8500)
2-8. CABINET (L) AND BATTERY PANEL BLOCK
2-11. ZOOM LENS BLOCK
2-13. VC-195/SE-67 (SE-66) BOARDS
2-7. EVF BLOCK-2 (VF-99 BOARD)
2-9. CASSETTE LID ASSEMBLY
2-3. EVF BLOCK-1
2-4.LCD BLOCK (3-3.5INCH)
2-5.LCD BLOCK (2.5INCH)
The means that each model has different operating procedure.
2-10. CONTROL SWITCH BLOCK (FK-8500)
2-12. DD-105/PJ-84 (PJ-83) BOARDS

**NOTE :** Follow the disassembly procedure in the numerical order given.

## 2-1. REMOVAL OF FRONT PANEL BLOCK

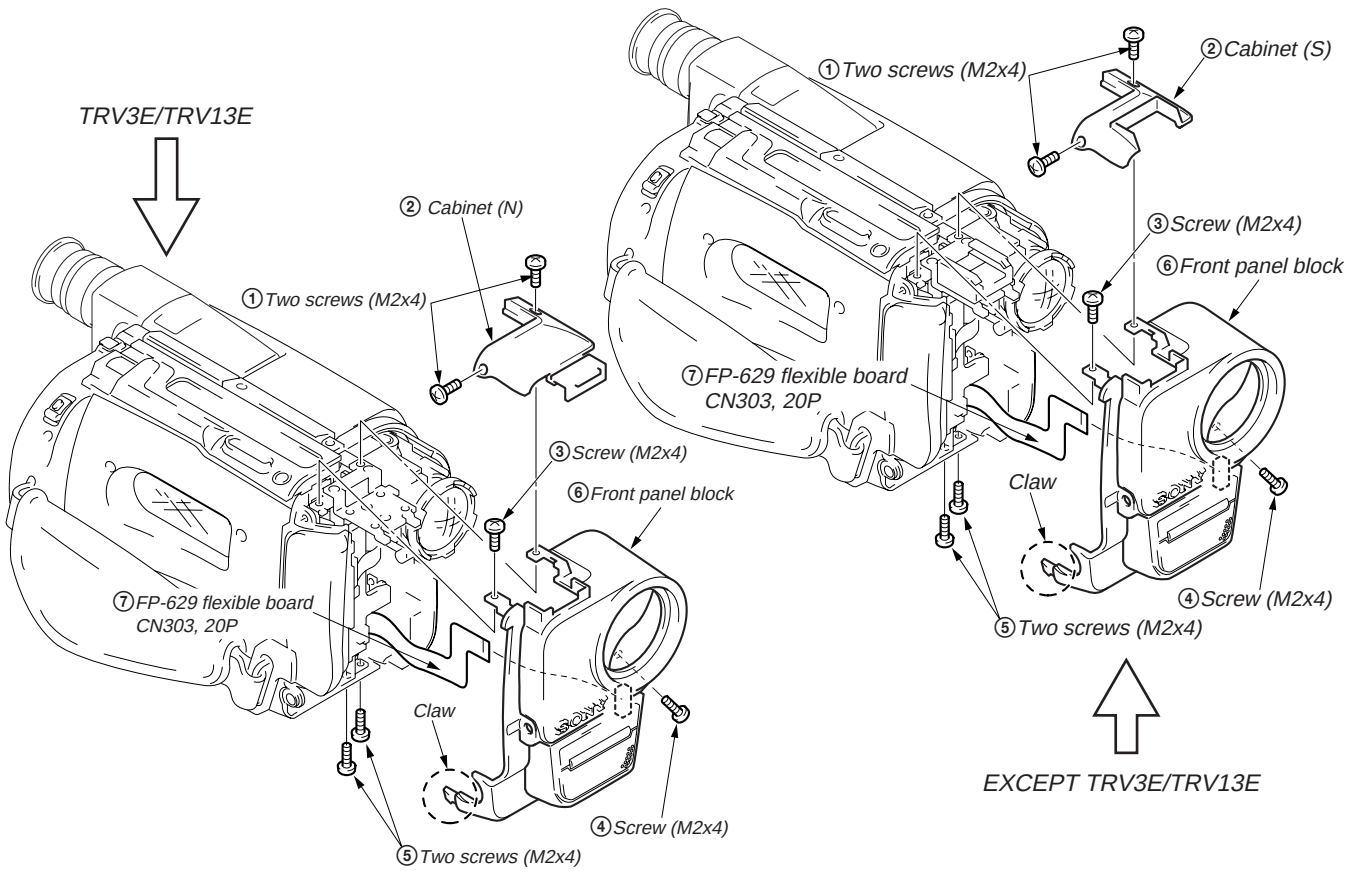

## 2-2. REMOVAL OF CABINET (R) BLOCK

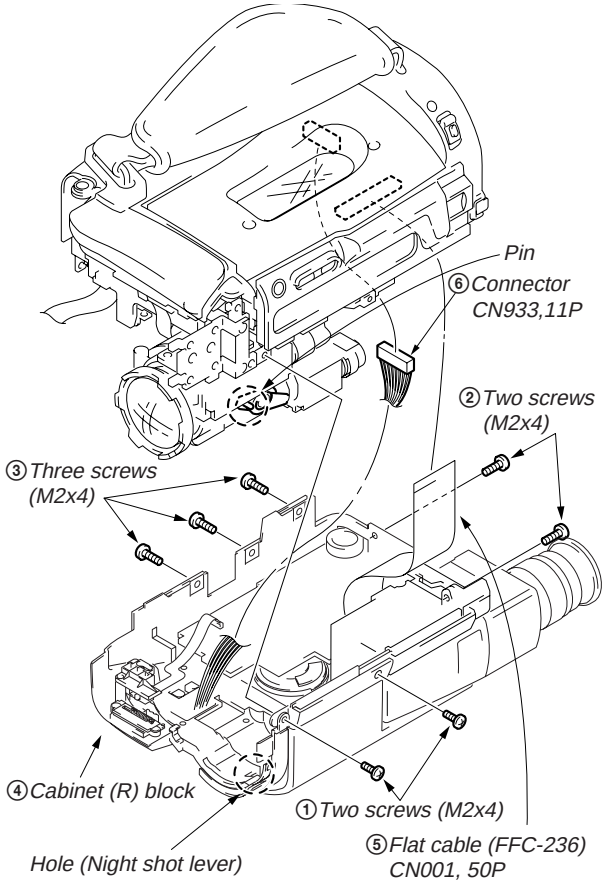


## 2-3. REMOVAL OF EVF BLOCK-1

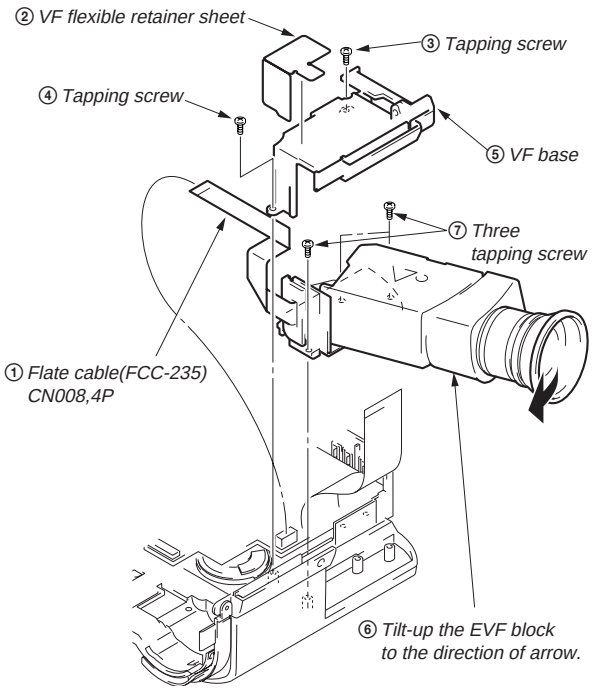


## 2-4. REMOVAL OF LCD BLOCK (3/3.5 INCH)

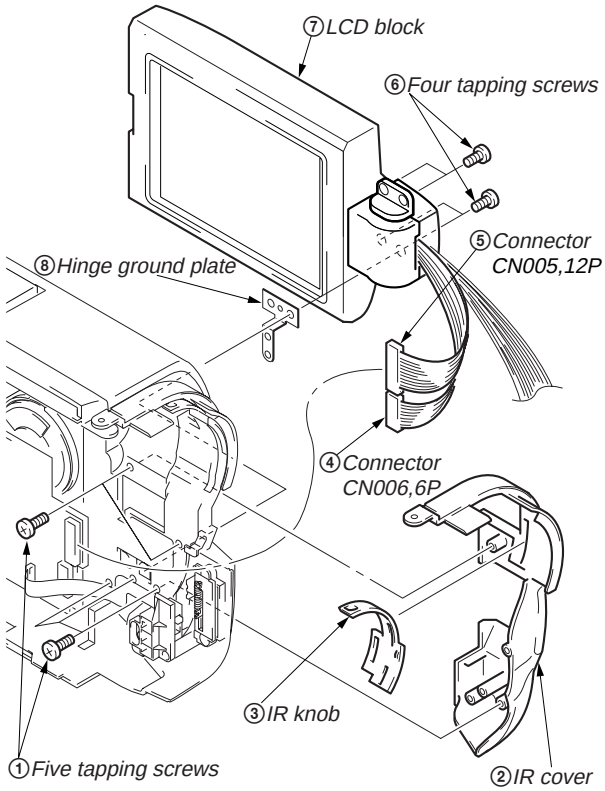


## 2-5. REMOVAL OF LCD BLOCK (2.5 INCH)

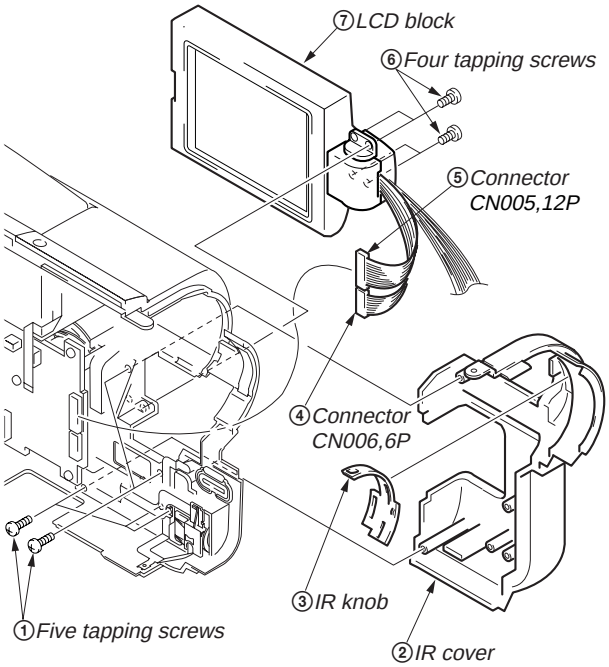

## 2-6. REMOVAL OF CF-51 (CF-50) BOARD AND CONTOROL SWITCH BLOCK (MR-8500)/(MF-8500)

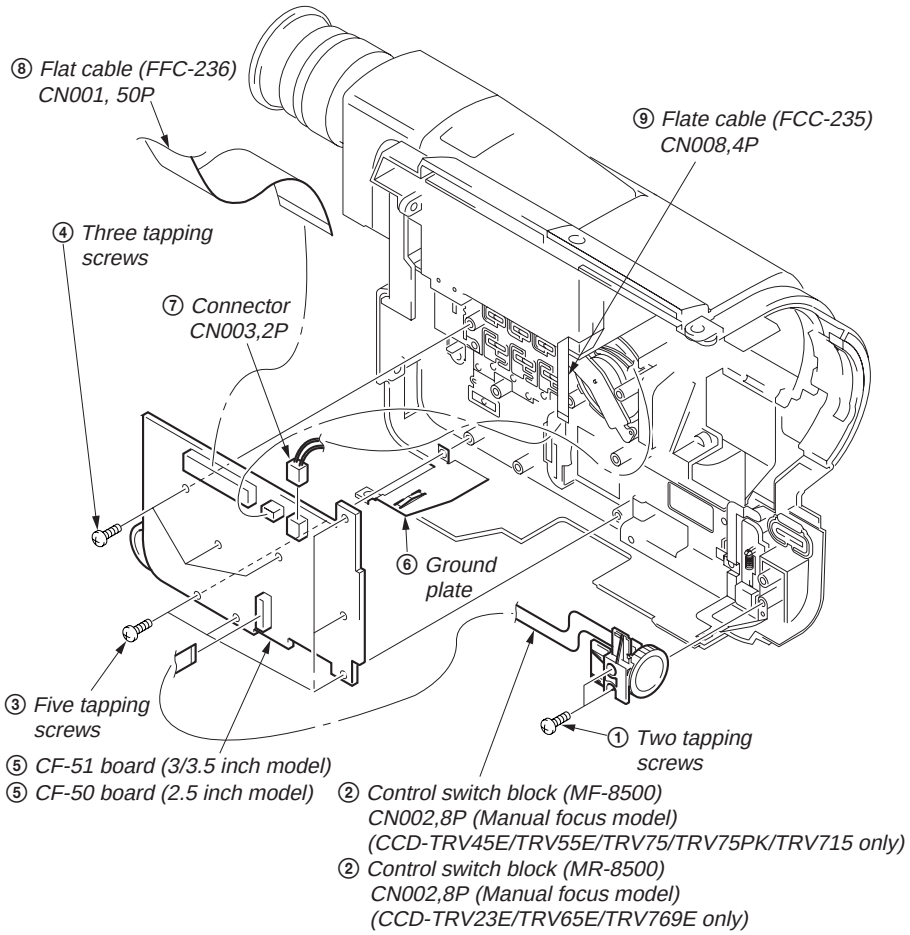
⑧ Flat cable (FFC-236) CN001, 50P
⑨ Flate cable (FCC-235) CN008,4P
④ Three tapping screws
⑦ Connector CN003,2P
⑥ Ground plate
③ Five tapping screws
① Two tapping screws
⑤ CF-51 board (3/3.5 inch model)
⑤ CF-50 board (2.5 inch model)
② Control switch block (MF-8500) CN002,8P (Manual focus model) (CCD-TRV45E/TRV55E/TRV75/TRV75PK/TRV715 only)
② Control switch block (MR-8500) CN002,8P (Manual focus model) (CCD-TRV23E/TRV65E/TRV769E only)

## 2-7. REMOVAL OF EVF BLOCK-2

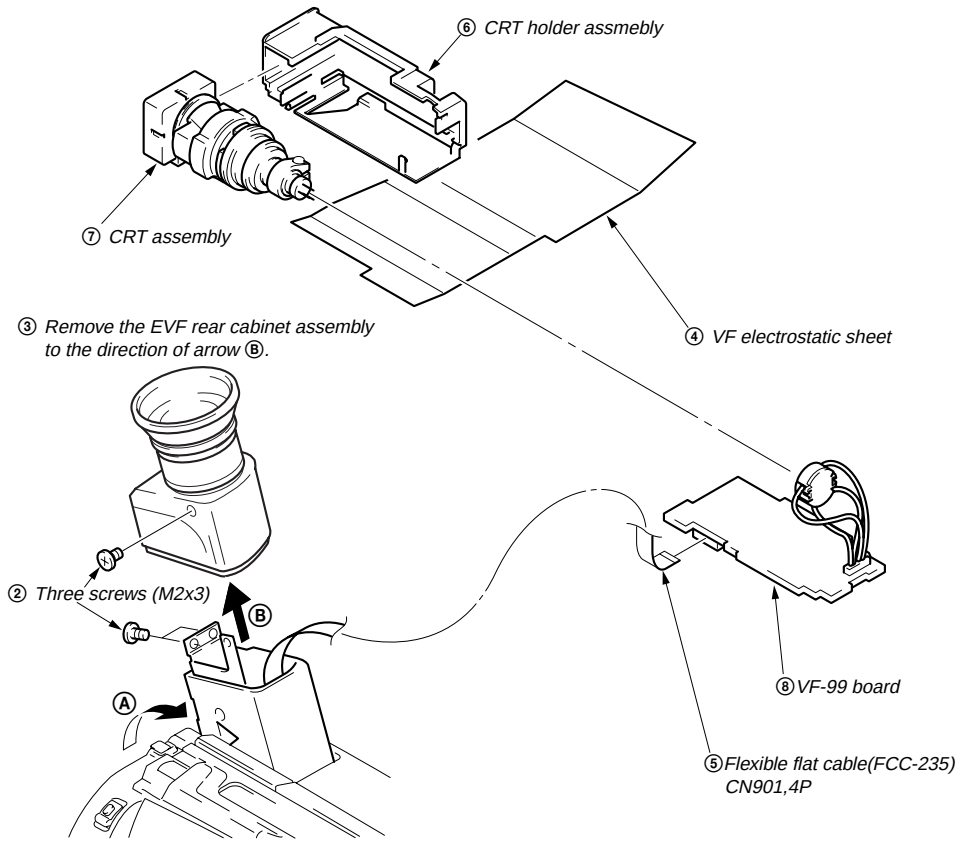
⑥ CRT holder assmebly
⑦ CRT assembly
③ Remove the EVF rear cabinet assembly to the direction of arrow Ⓑ.
④ VF electrostatic sheet
② Three screws (M2x3)
Ⓑ
Ⓐ
⑧ VF-99 board
⑤ Flexible flat cable(FCC-235) CN901,4P
① Tilt-up the EVF block to the direction of arrow Ⓐ.

## 2-8. REMOVAL OF CABINET (L) BLOCK AND BATTERY PANEL BLOCK

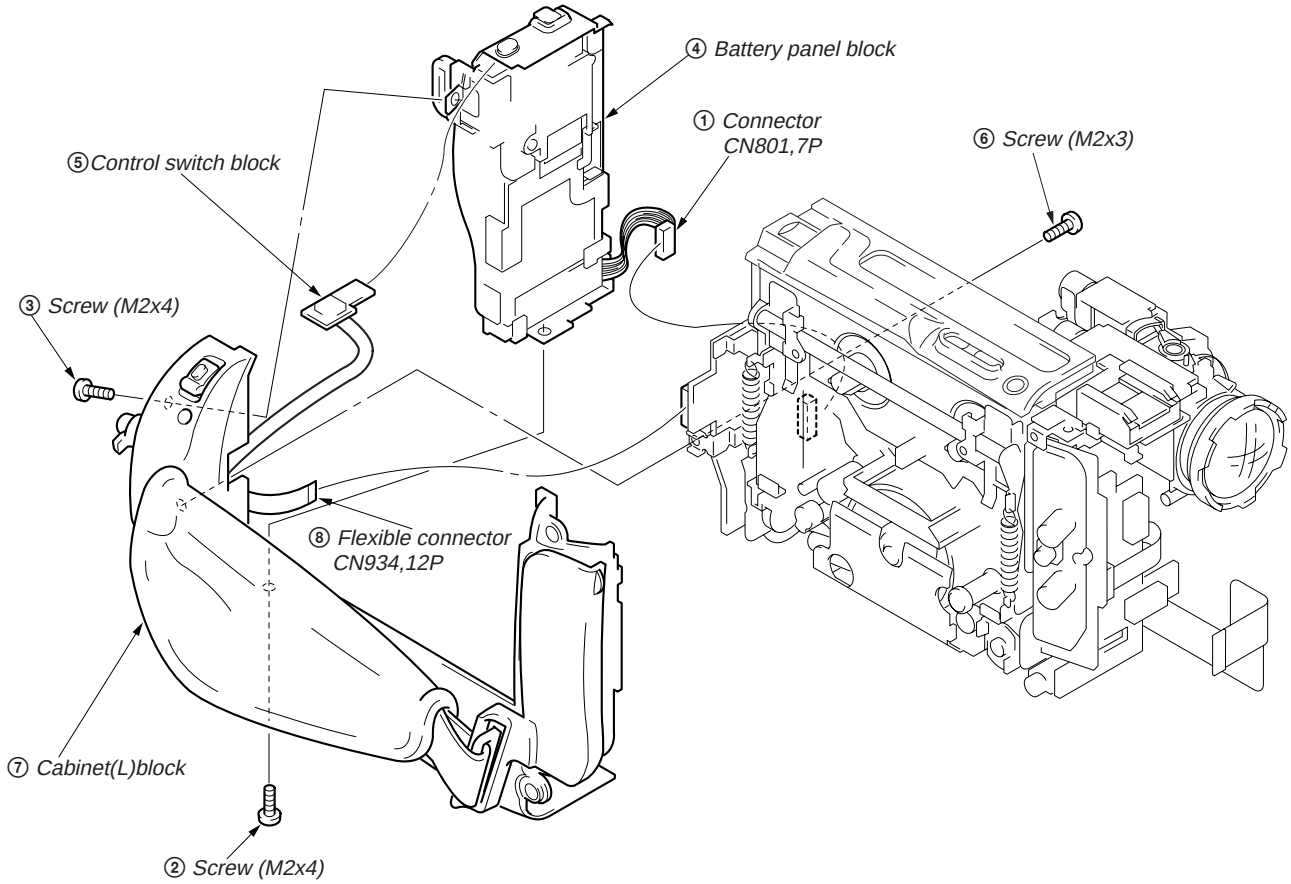


## 2-9. REMOVAL OF CASSETTE LID ASSEMBLY

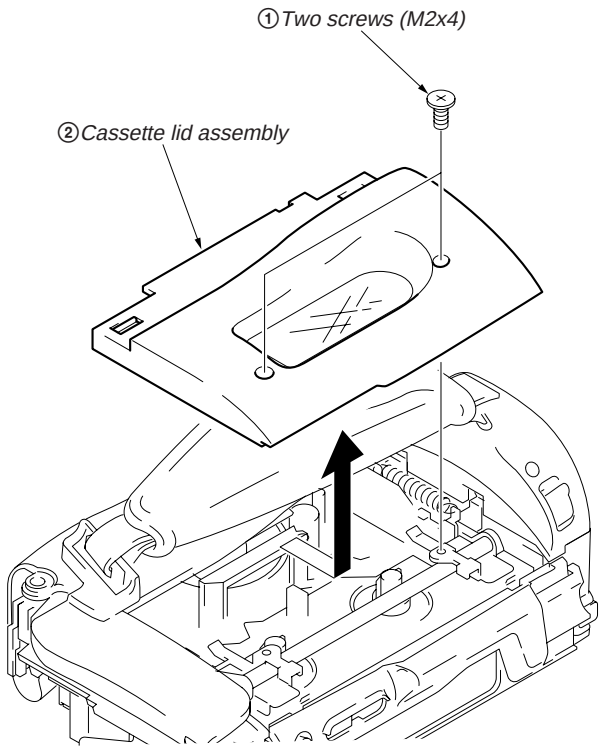


## 2-10. REMOVAL OF CONTROL SWITCH BLOCK (FK-8500)

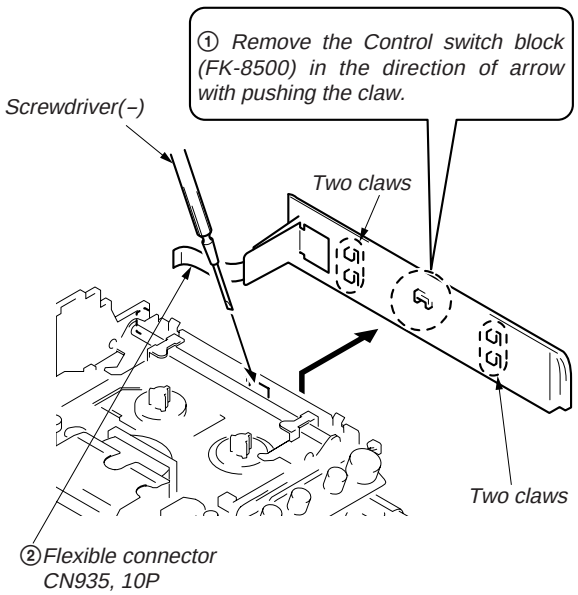
① Remove the Control switch block (FK-8500) in the direction of arrow with pushing the claw.
Screwdriver(–)
Two claws
Two claws
②Flexible connector CN935, 10P

## 2-11. REMOVAL OF ZOOM LENS BLOCK

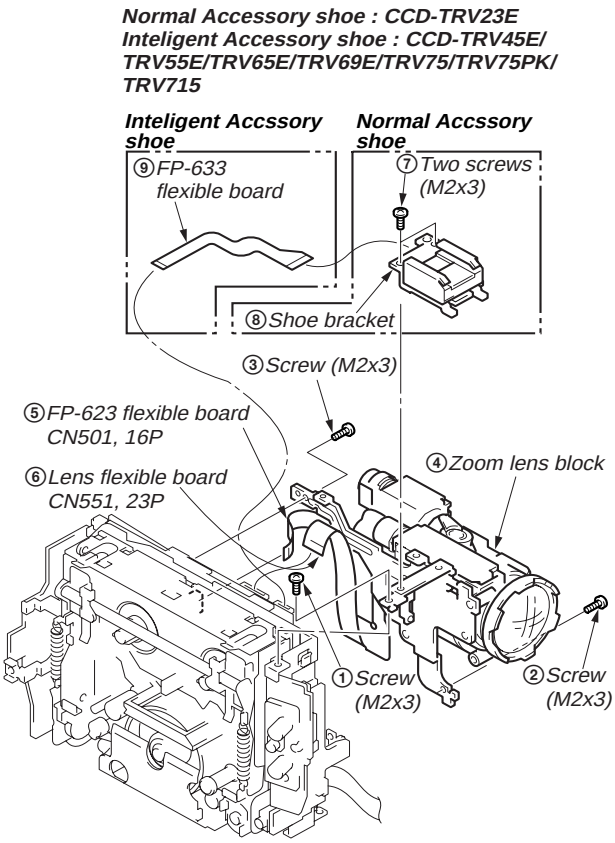


## 2-12. REMOVAL OF DD-105 BOARD AND PJ-84 (PJ-83) BOARD

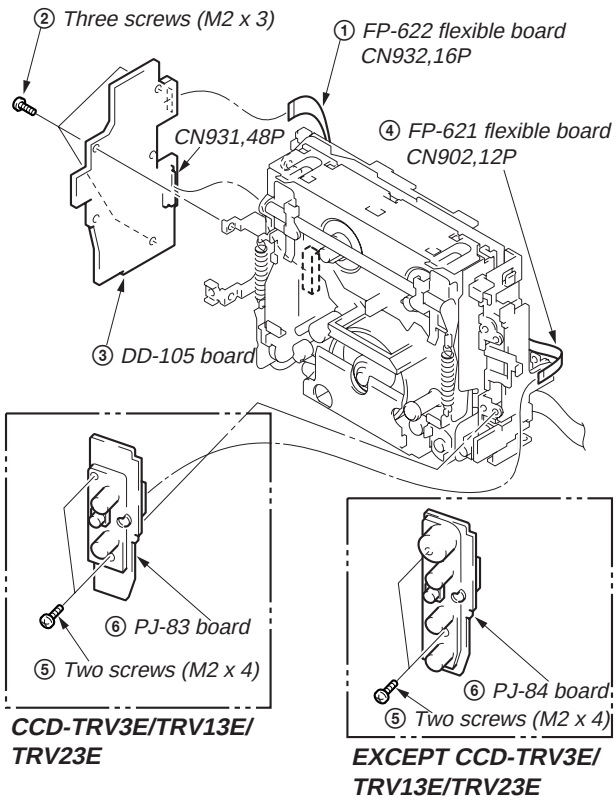


## 2-13. REMOVAL OF VC-195 AND SE-67 (SE-66) BOARD

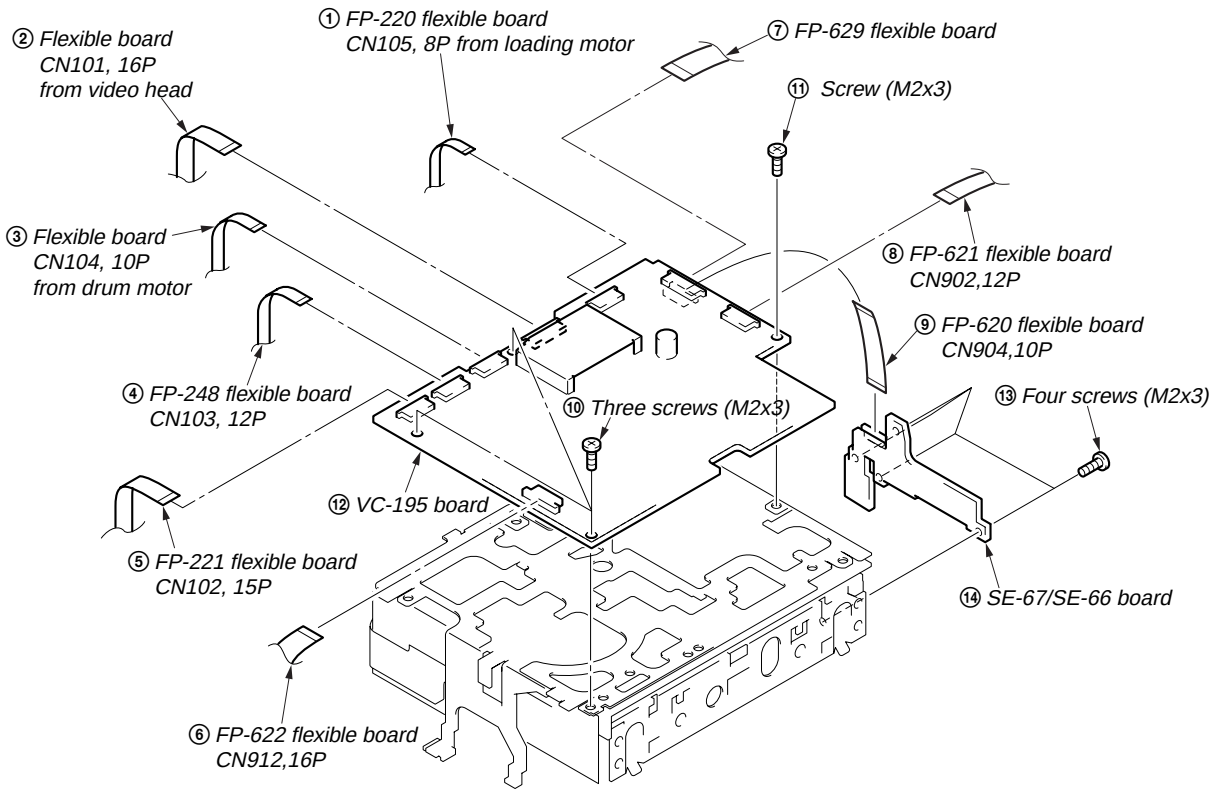
② Flexible board CN101, 16P from video head
① FP-220 flexible board CN105, 8P from loading motor
⑦ FP-629 flexible board
⑪ Screw (M2x3)
③ Flexible board CN104, 10P from drum motor
⑧ FP-621 flexible board CN902,12P
⑨ FP-620 flexible board CN904,10P
④ FP-248 flexible board CN103, 12P
⑩ Three screws (M2x3)
⑬ Four screws (M2x3)
⑫ VC-195 board
⑤ FP-221 flexible board CN102, 15P
⑭ SE-67/SE-66 board
⑥ FP-622 flexible board CN912,16P

## 2-14. SERVICE POSITION

PREPARATION; Refer to the previous section “DISASSEMBLY”, and connect as shown in the figure after each parts has been removed.

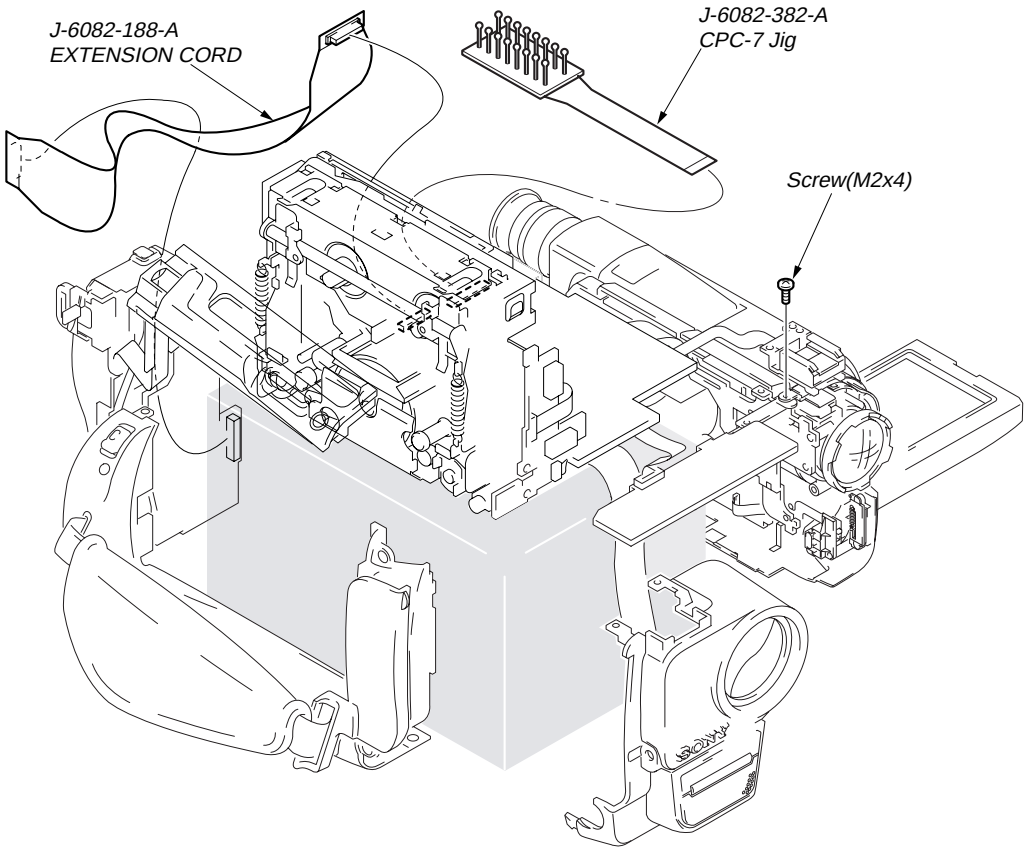

## 2-15. CIRCUIT BOARDS LOCATION

2.5 INCH LCD MODEL : CCD-TRV3E/TRV13E/TRV23E/
TRV65E/TRV69E
3 INCH LCD MODEL : CCD-TRV75/TRV75PK/TRV715
3.5 INCH LCD MODEL : CCD-TRV45E/TRV55E

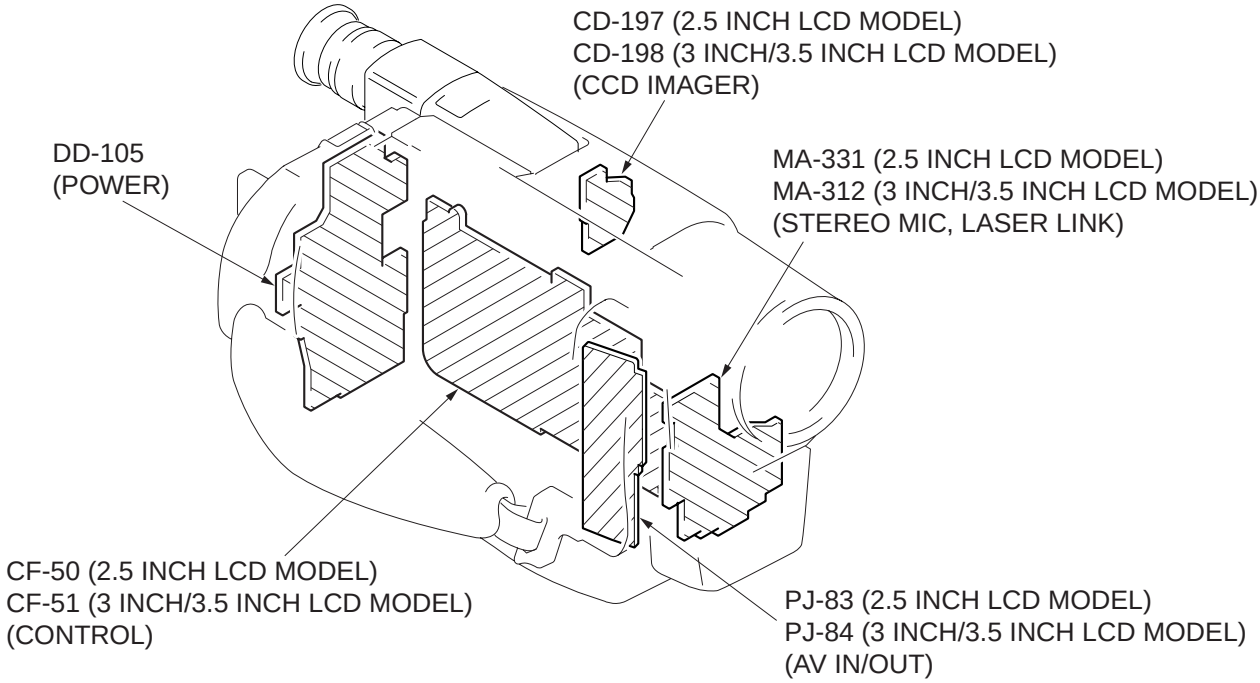


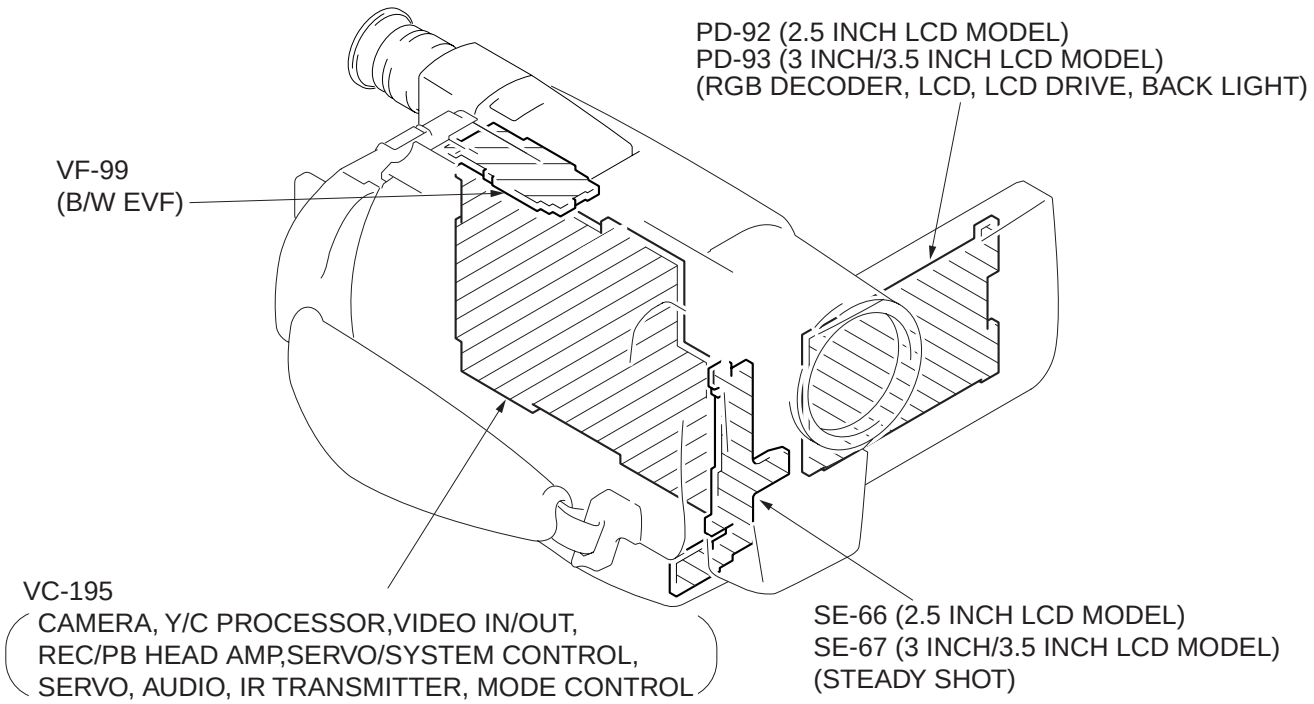
PD-92 (2.5 INCH LCD MODEL)
PD-93 (3 INCH/3.5 INCH LCD MODEL)
(RGB DECODER, LCD, LCD DRIVE, BACK LIGHT)
VF-99
(B/W EVF)
VC-195
CAMERA, Y/C PROCESSOR,VIDEO IN/OUT,
REC/PB HEAD AMP,SERVO/SYSTEM CONTROL,
SERVO, AUDIO, IR TRANSMITTER, MODE CONTROL
SE-66 (2.5 INCH LCD MODEL)
SE-67 (3 INCH/3.5 INCH LCD MODEL)
(STEADY SHOT)

# SECTION 3
# BLOCK DIAGRAMS

## 3-1. OVERALL BLOCK DIAGRAM

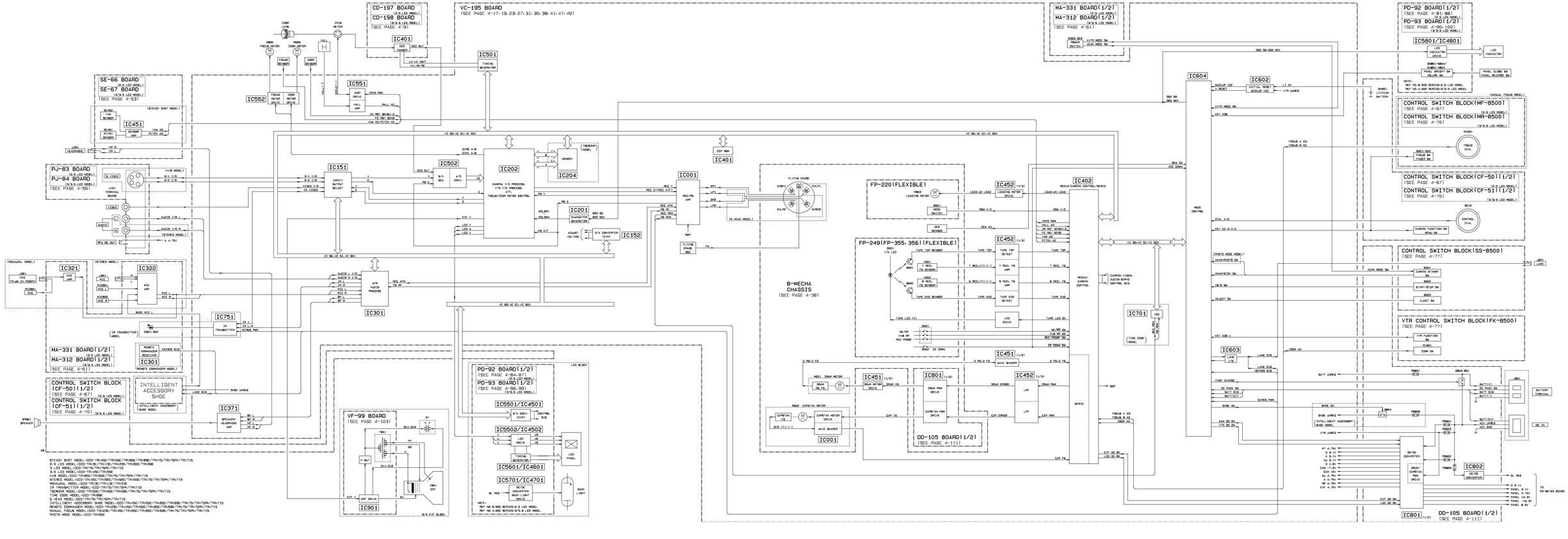

## 3-2. CAMERA/VIDEO 1 BLOCK DIAGRAM

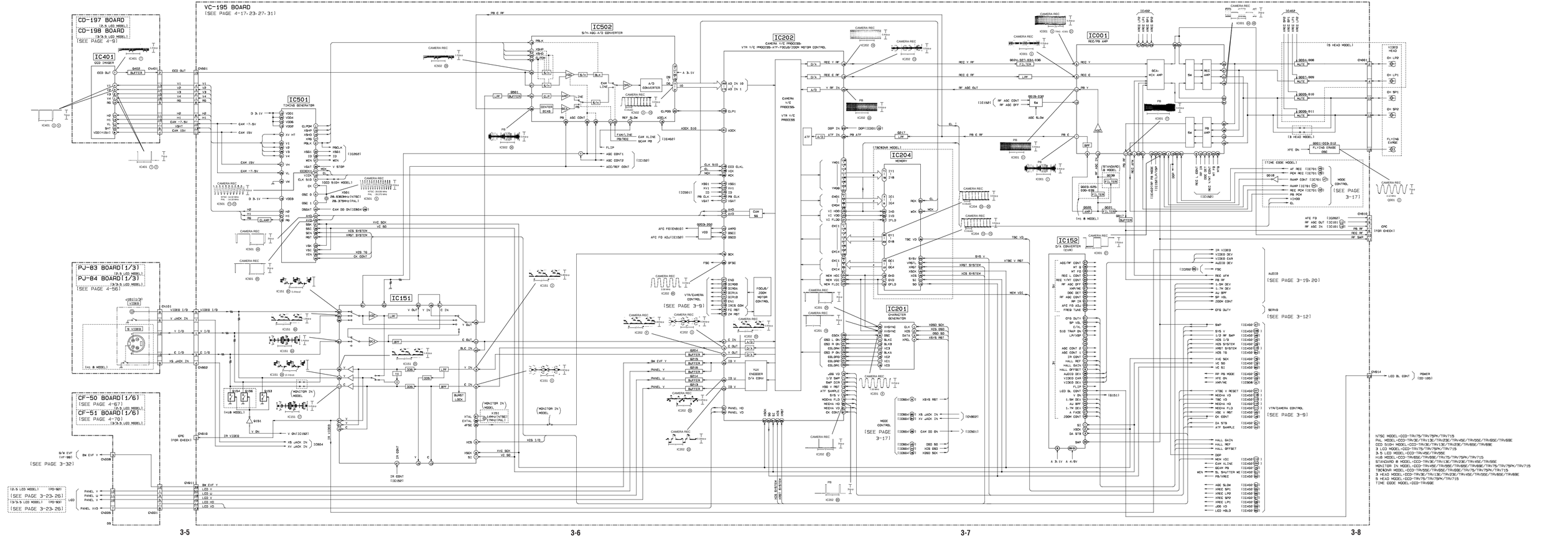

### 3-3. VTR/CAMEARA CONTROL BLOCK DIAGRAM

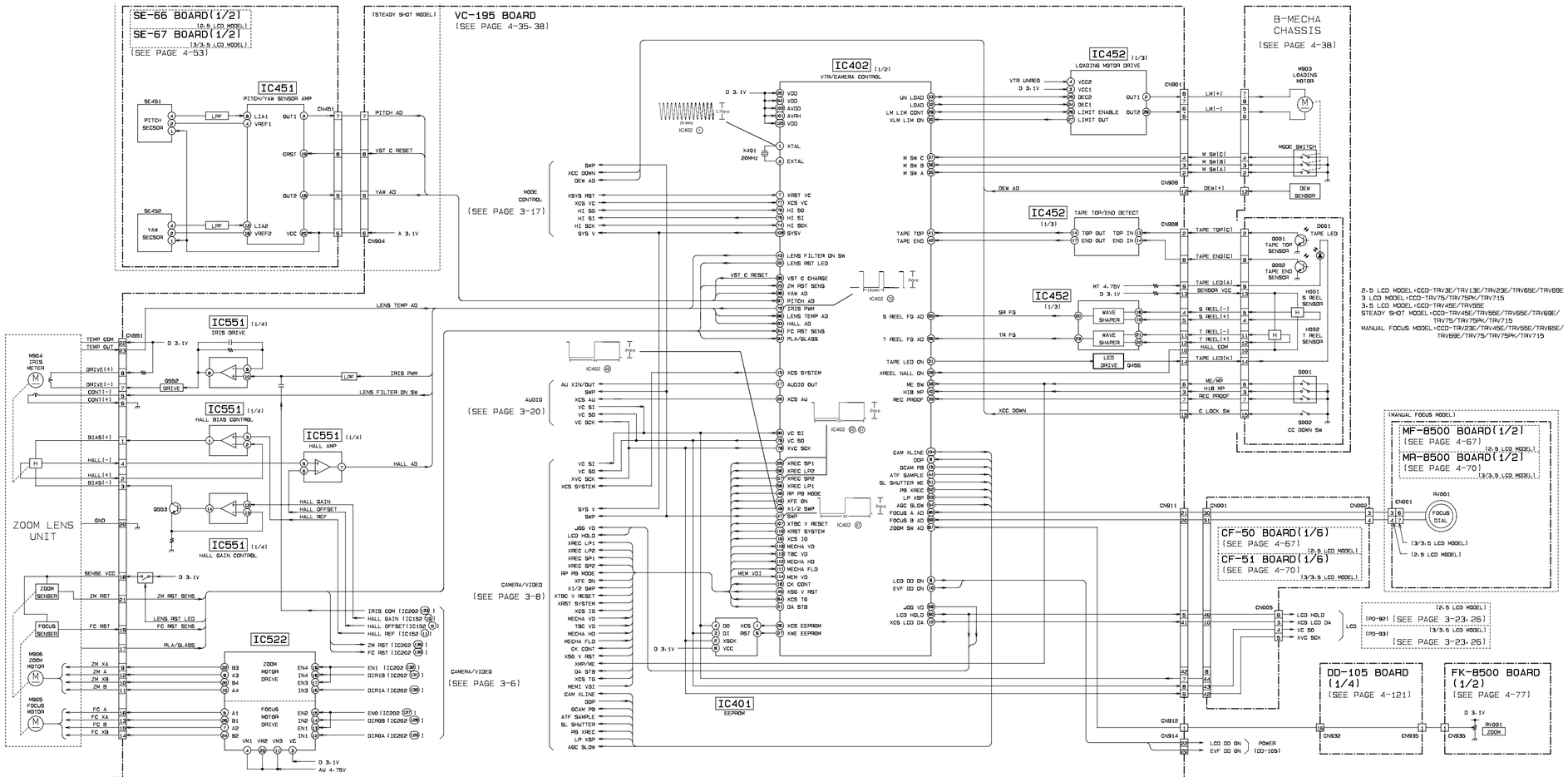

### 3-4. SERVO BLOCK DIAGRAM

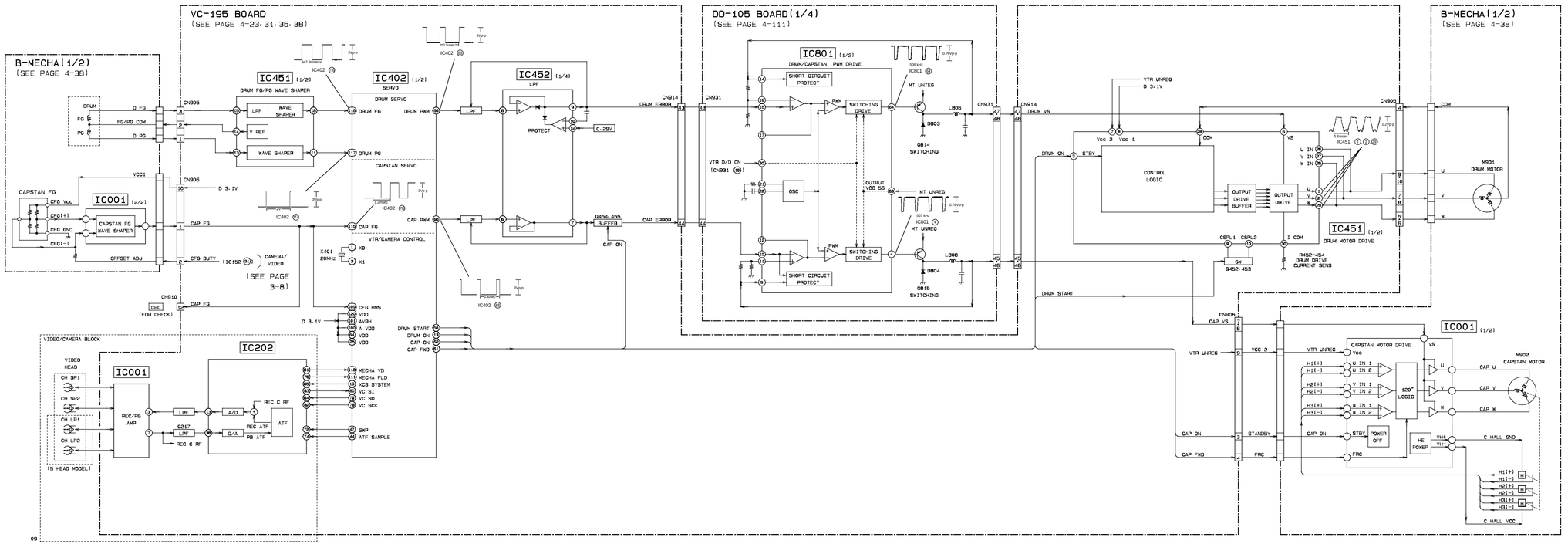

## 3-5. MODE CONTROL BLOCK DIAGRAM

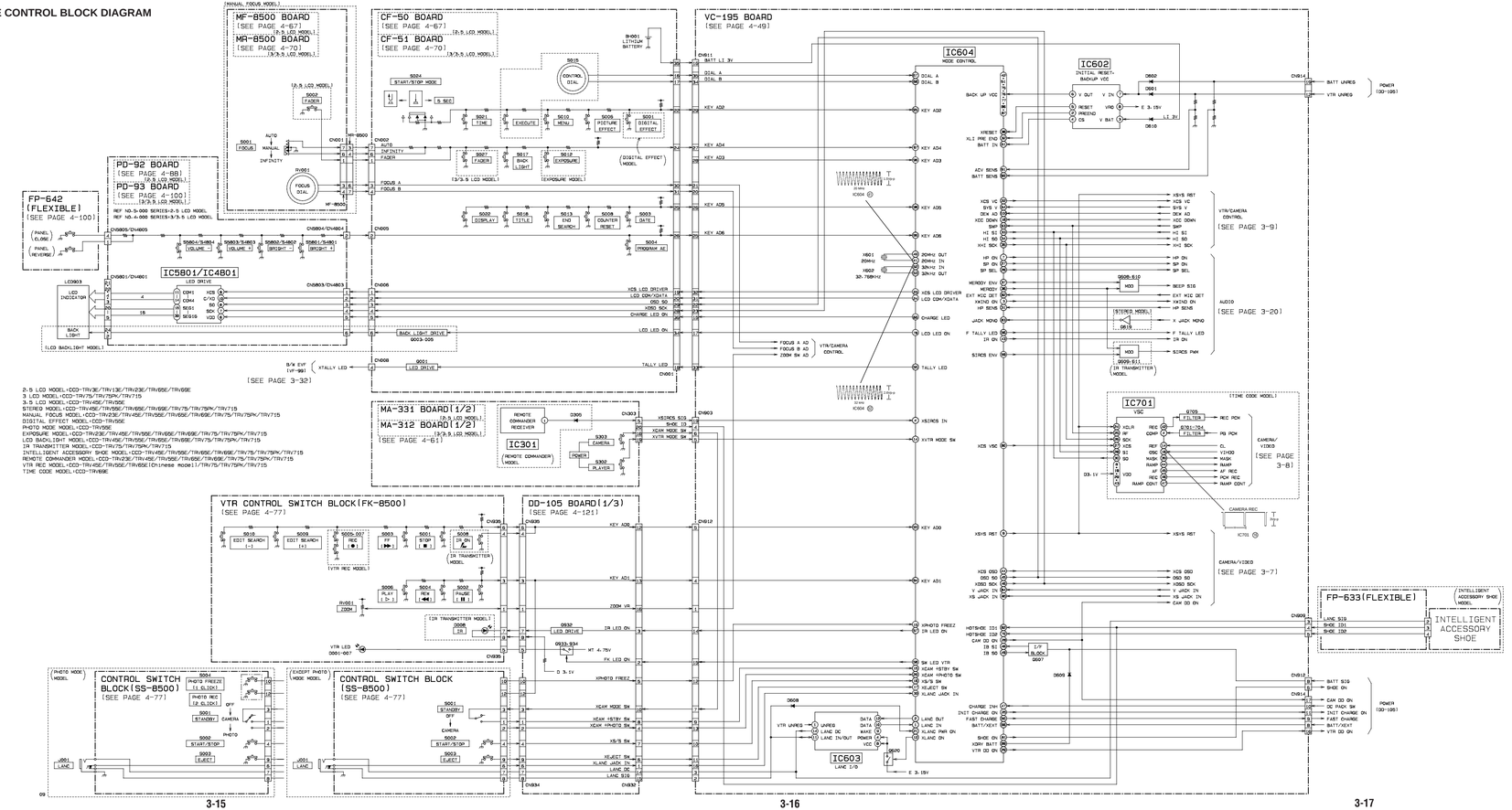

## 3-6. AUDIO BLOCK DIAGRAM

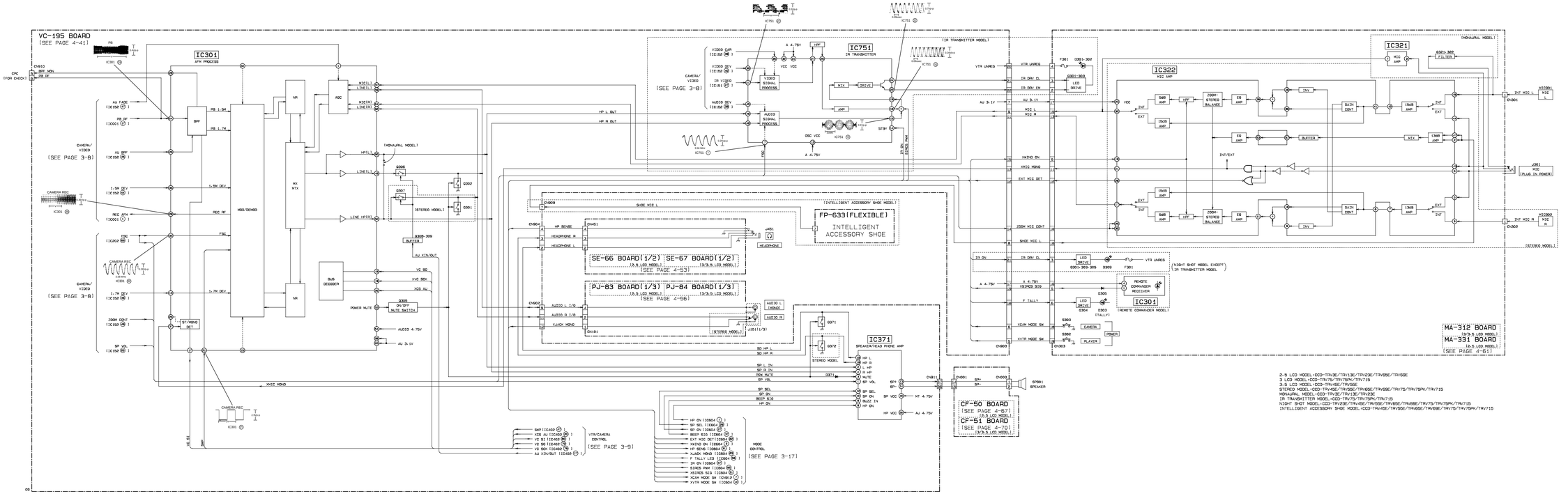

### 3-7. LCD (CCD-TRV23E/TRV45E/TRV55E/TRV65E/TRV69E/TRV75/TRV75PK/TRV715) BLOCK DIAGRAM

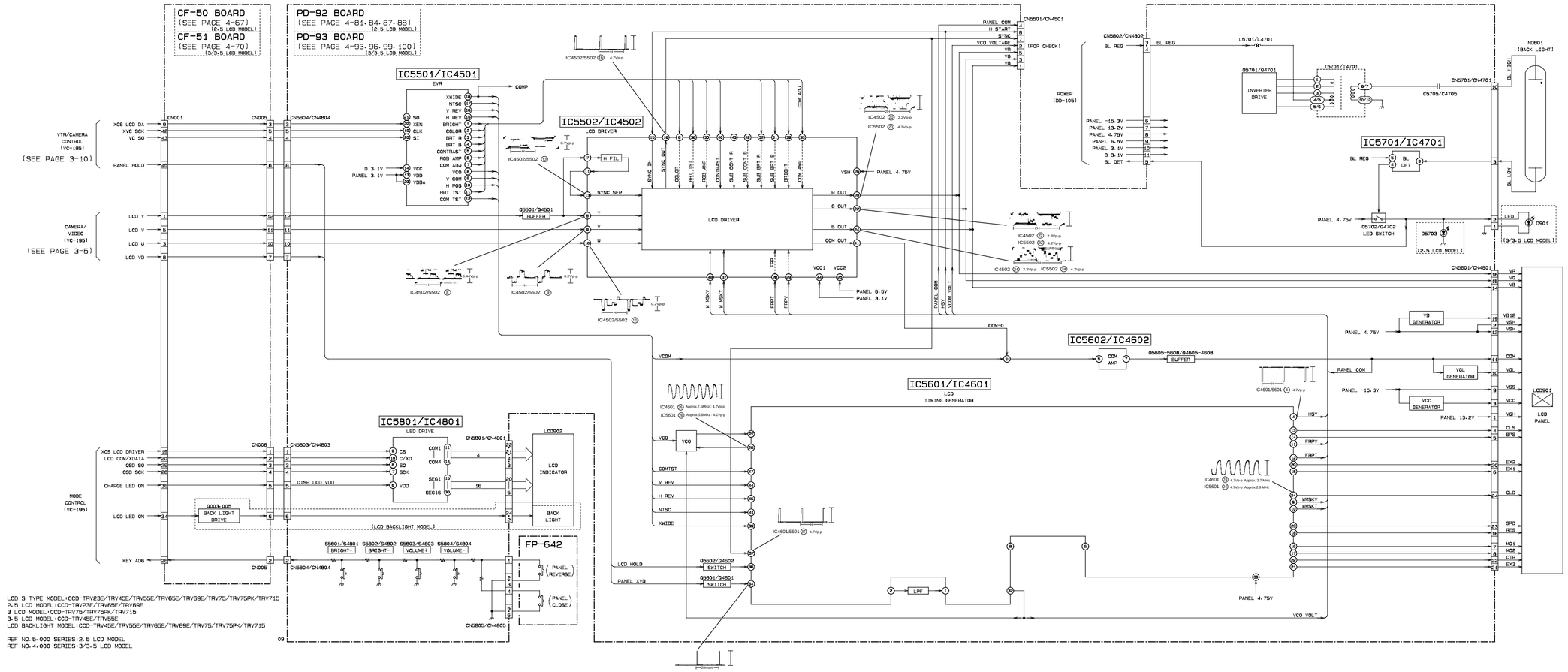

### 3-8. LCD (CCD-TRV3E/TRV13E) BLOCK DIAGRAM

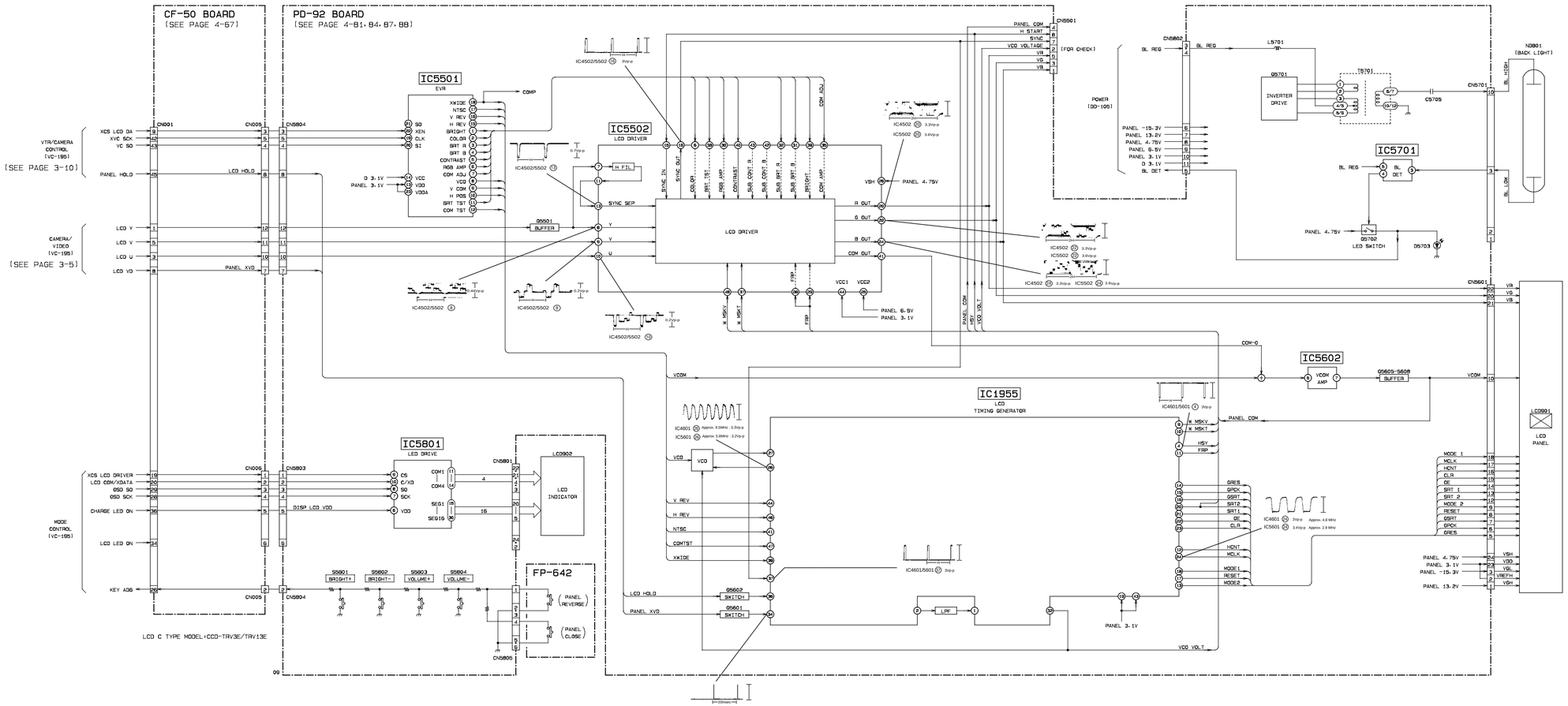

### 3-9. B/W EVF BLOCK DIAGRAM

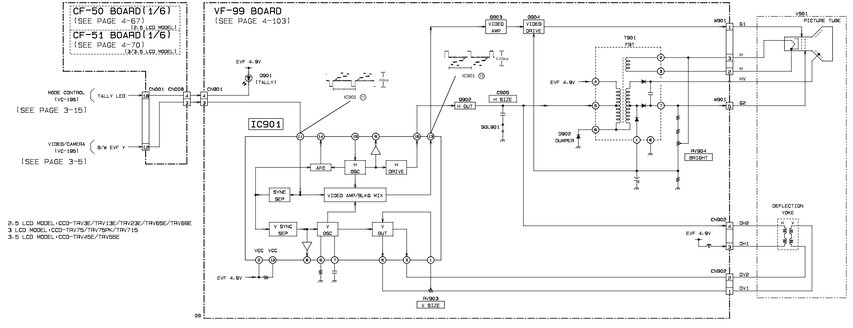

### 3-10. POWER BLOCK DIAGRAM

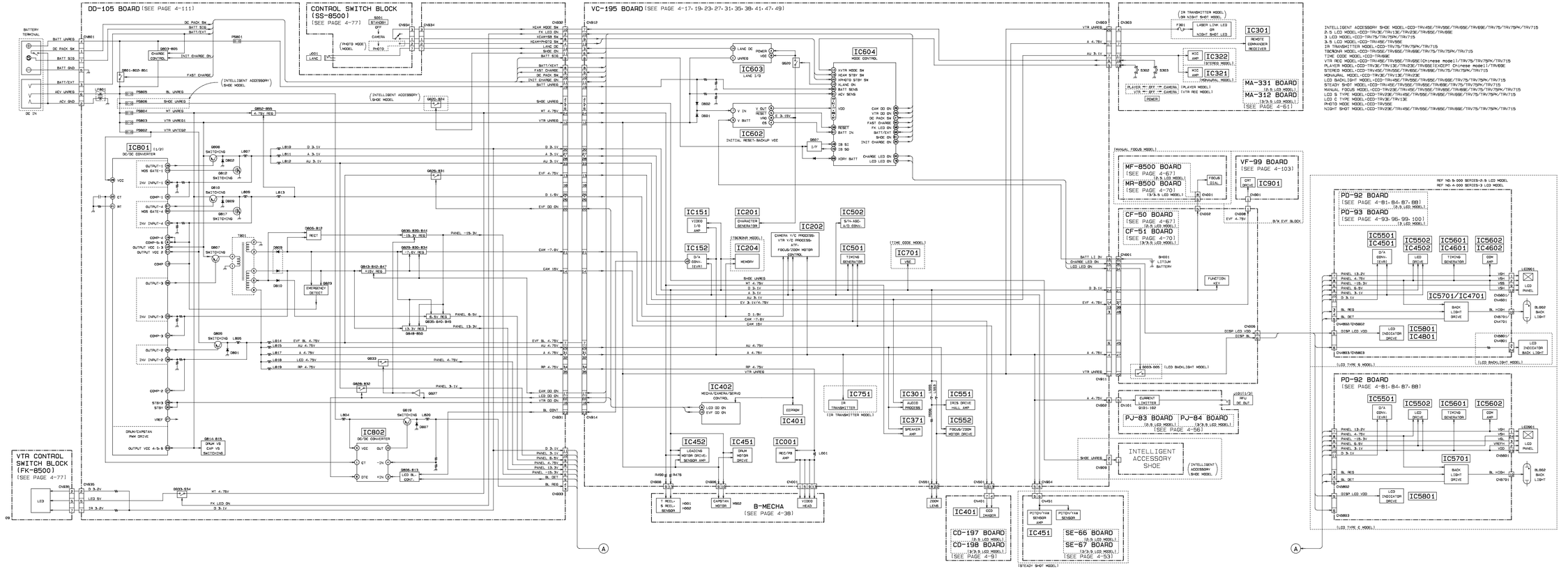
DD-105 BOARD (SEE PAGE 4-111)
CONTROL SWITCH BLOCK (SS-8500) (SEE PAGE 4-77)
VC-195 BOARD (SEE PAGE 4-17, 19, 23, 27, 31, 35, 38, 41, 47, 49)
VTR CONTROL SWITCH BLOCK (FK-8500) (SEE PAGE 4-77)
B-MECHA (SEE PAGE 4-38)
IC801 DC/DC CONVERTER
IC802 DC/DC CONVERTER
IC602 INITIAL RESET/BACKUP VCC
IC603 LANC I/O
IC604 MODE CONTROL
IC151 VIDEO I/O
IC152 D/A CONV. (EVF)
IC201 CHARACTER GENERATOR
IC202 CAMERA Y/C PROCESSOR/ VTR Y/C PROCESS-ING/ FOCUS/ZOOM MOTOR CONTROL
IC204 MEMORY
IC301 AUDIO PROCESS
IC371 SPEAKER AMP
IC401 EEPROM
IC402 MECHA/CAMERA/SERVO CONTROL
IC451 DRUM MOTOR DRIVE
IC452 CAPSTAN MOTOR DRIVE/ SENSOR AMP
IC501 TIMING GENERATOR
IC502 S/H-AGC/ A/D CONV.
IC551 IRIS DRIVE HALL AMP
IC552 FOCUS/ZOOM MOTOR DRIVE
IC701 VDC
IC751 IR TRANSMITTER
IC001 REC/PB AMP
IC322 MIC AMP (STEREO MODEL)
IC321 MIC AMP (MONAURAL MODEL)
IC301 REMOTE COMMANDER RECEIVER
MA-331 BOARD (9.5 LCD MODEL) (SEE PAGE 4-61)
MA-312 BOARD (3.5/5.5 LCD MODEL) (SEE PAGE 4-61)
MF-8500 BOARD (SEE PAGE 4-67) (9.5 LCD MODEL)
MR-8500 BOARD (SEE PAGE 4-70) (3.5/5.5 LCD MODEL)
VF-99 BOARD (SEE PAGE 4-103)
CF-50 BOARD (SEE PAGE 4-67) (9.5 LCD MODEL)
CF-51 BOARD (SEE PAGE 4-70) (3.5/5.5 LCD MODEL)
PJ-83 BOARD (9.5 LCD MODEL) (SEE PAGE 4-56)
PJ-84 BOARD (3.5/5.5 LCD MODEL) (SEE PAGE 4-56)
PD-92 BOARD (SEE PAGE 4-81, 84, 87, 88) (9.5 LCD MODEL)
PD-93 BOARD (SEE PAGE 4-93, 96, 99, 100) (3.5 LCD MODEL)
CD-197 BOARD (9.5 LCD MODEL)
CD-198 BOARD (3.5/5.5 LCD MODEL) (SEE PAGE 4-9)
SE-66 BOARD (9.5 LCD MODEL)
SE-67 BOARD (3.5/5.5 LCD MODEL) (SEE PAGE 4-53)
INTELLIGENT ACCESSORY SHOE
INTELLIGENT ACCESSORY SHOE MODEL
BATTERY TERMINAL
DC IN
LASER LINK LED
NIGHT SHOT LED
REMOTE COMMANDER RECEIVER
PLAYER + OFF + CAMERA
VTR + OFF + CAMERA
POWER
LANC DC
LANC
VTR MODE SW
XCAM STBY SW
XPHOTO STBY SW
ALINK ON
SHOE ON
BATT SENS
ACV SENS
XCRV BATT
CAM I/O ON
VTR I/O ON
DC PACK SW
FAST CHARGE
FX LCD ON
INIT CHARGE ON
BATT/EXT
CHARGE LED ON
LCD LED ON
V IN
V OUT
V BATT
RESET
VRO
CS
I2C SI
I2C SO
XCRV
CHARGE CONTROL
INIT CHARGE ON
FAST CHARGE
BL LVNEG
SHOE LVNEG
WT LVNEG
VTR LVNEG1
VTR LVNEG2
OUTPUT-1 MOS GATE-1
INV INPUT-1
OUTPUT-4 MOS GATE-4
INV INPUT-4
COMP-4
COMP-5 &
OUTPUT VCC 1-3
OUTPUT VCC 2
COMP
OUTPUT-3
INV INPUT-3
COMP-3
OUTPUT-2
INV INPUT-2
COMP-2
STBY3
STBY
VREF
DRUM/CAPSTAN PWM DRIVE
OUTPUT VCC 4-5-6
DRUM VS EVF VS SWITCHING
VCC
CT
-IN
DTC
+IN
LCD BL CONT.
EMERGENCY DETECT
REG7
REG8
REG9
REG10
REG11
REG12
REG13
REG14
REG15
REG16
REG17
REG18
REG19
REG20
REG21
REG22
REG23
REG24
REG25
REG26
REG27
REG28
REG29
REG30
REG31
REG32
REG33
REG34
REG35
REG36
REG37
REG38
REG39
REG40
REG41
REG42
REG43
REG44
REG45
REG46

## 4-1. FRAME SCHEMATIC DIAGRAM (1)

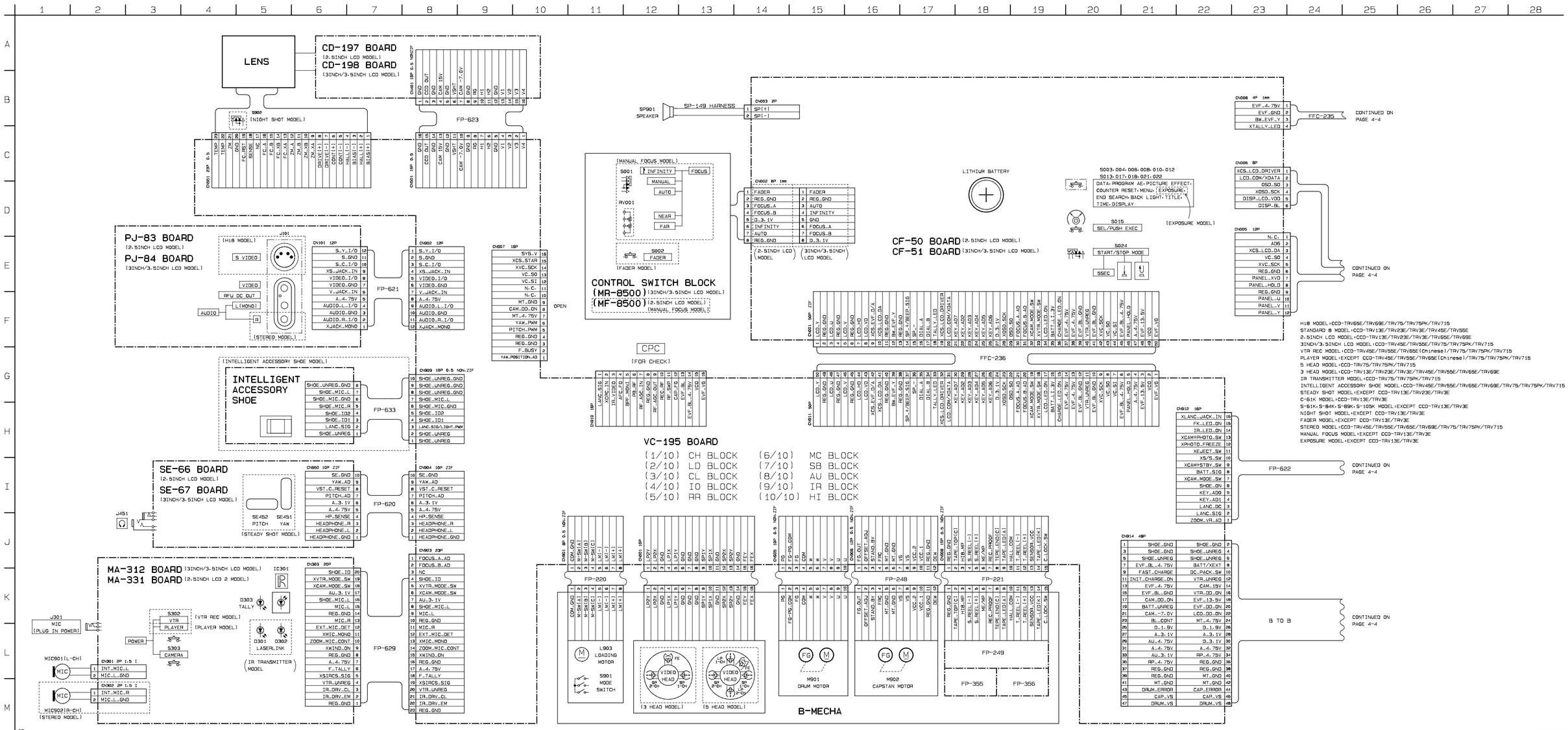

## FRAME SCHEMATIC DIAGRAM (2)

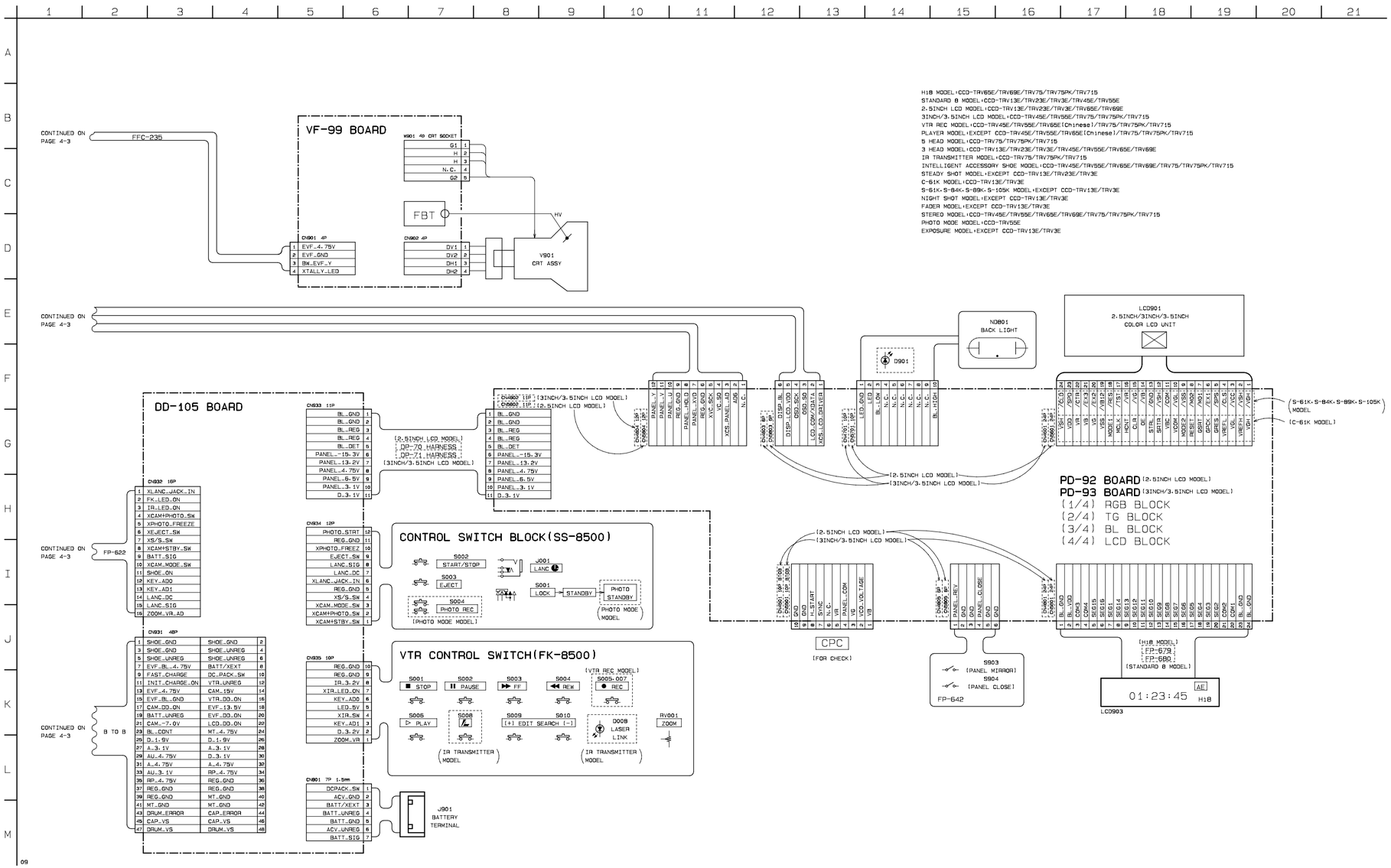

## 4-2. PRINTED WIRING BOARDS AND SCHEMATIC DIAGRAMS

**THIS NOTE IS COMMON FOR PRINTED WIRING BOARDS AND SCHEMATIC DIAGRAMS.**
**(In addition to this, the necessary note is printed in each block.)**

- **For printed wiring boards.**
- ▒▒▒ : Pattern from the side which enable seeing.
  (The other layer's patterns are not indicated.)
- Circled numbers refer to waveforms.
- Through hole is omitted.
- There are few cases that the part printed on diagram isn't mounted in this model.
- Chip parts.

Transistor

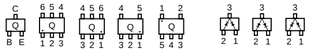


Diode




- **For schematic diagrams.**
- All capacitors are in μF unless otherwise noted. pF: μμF.
  50 V or less are not indicated except for electrolytics and tantalums.
- Chip resistor are 1/16W unless otherwise noted.
  kΩ : 1000Ω, MΩ : 1000kΩ.
- Caution when replacing chip parts.
  New parts must be attached after removal of chip.
  Be careful not to heat the minus side of tantalum capacitor, because it is damaged by the heat.
- Some chip part will be indicated as follows.
  Example C541 L452
  22U 10UH
  TA A 2520
  Kinds of capacitor / Temperature chracteristics / External dimensions (mm)
- Constants of resistors, capasitors, ICs and etc with XX indicate tha they are not used. In such cases, the unused circuits may be indicated.
- Parts with ☆ differ according to the model/destination. Refer to the mount table for each function.
- All variable and adjustable resistors have characteristic curve B, unless otherwise noted.
- Signal name
  XEDIT → $\overline{\text{EDIT}}$ PB/XREC → $\overline{\text{PB/REC}}$
- : non flammable resistor.
- : fusible resistor.
- : panel designation.
- : B+ Line
- : B– Line
- : IN/OUT direction of (+, –) B LINE.
- : adjustment for repair.
- Circled numbers refer to waveforms.

| | |
|---|---|
| The components identified by mark ⚠or dotted line with mark ⚠ are critical for safety. Replace only with part number specified. | Les composants identifiés par une marque ⚠ sont critiques pour la sécurité. Ne les remplacer que par une piéce portant le numéro spécifié. |

When indicating parts by reference number, please include the board name.

Refer to page 3 as for "Table for difference of functions" of models and classification.

- **Measuring conditions voltage value and waveform.**
- The object is color bar chart of pattern box.
- Voltages and dc between ground and measurement points. Readings are taken with a digital multimeter (DC 10MΩ).
- Voltages variations may be noted due to normal production tolerances.

1.Connection

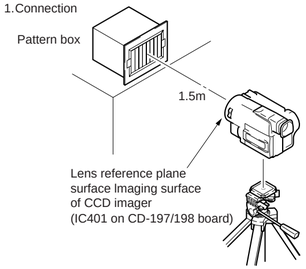


2.Adjust the distance so that the output waveform of Fig. a and the Fig. b can be obtain.

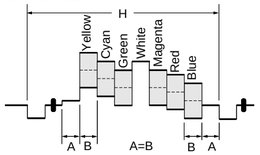


Fig. a (Video output terminal output waveform)

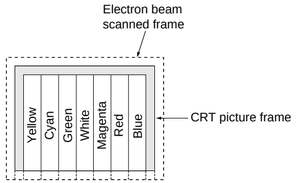


Fig. b (Picture on monitor TV)



## CD-197/198 (CCD IMAGER) (2.5 INCH LCD, 3 INCH/3.5 INCH LCD MODEL) PRINTED WIRING BOARD

– Ref No. CD-197 BOARD: 4,000 series, CD-198 BOARD: 9,000 series –

CD-197/198 BOARD (SIDE B)

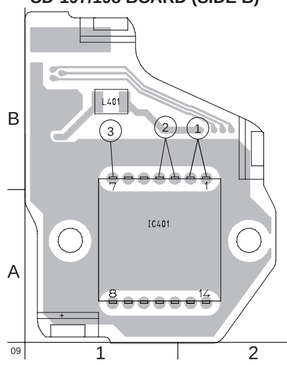


CD-197/198 BOARD (SIDE A)

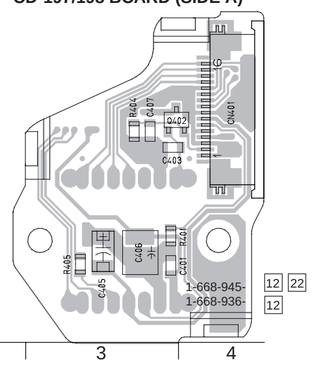


| CD-197/ CD-198 BOARD | |
|---|---|
| C401 | A-3 |
| C403 | B-3 |
| C405 | A-3 |
| C406 | A-3 |
| C407 | B-3 |
| CN401 | B-4 |
| IC401 | A-1 |
| L401 | B-1 |
| Q402 | B-3 |
| R401 | A-3 |
| R404 | B-3 |
| R405 | A-3 |

- **For Printed Wiring Boards.**

There are few cases that the part isn't mounted in this model is printed on this diagram.

- Chip transistor

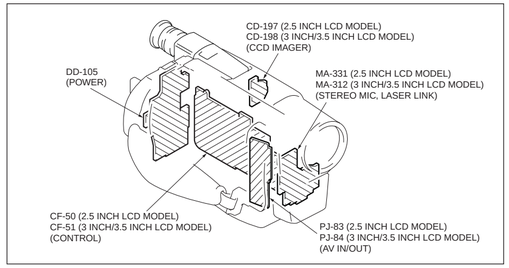




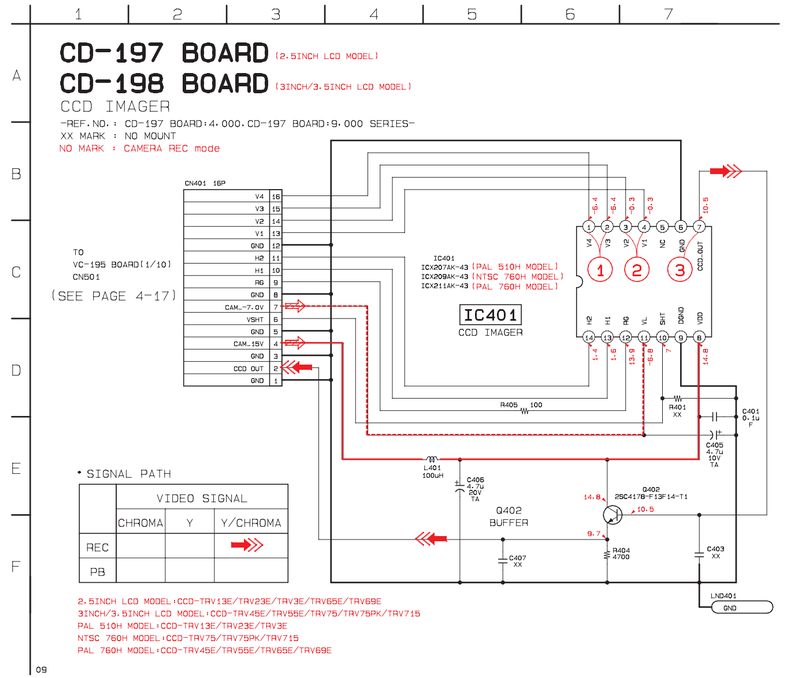


### CD-197/198 BOARD CAMERA REC

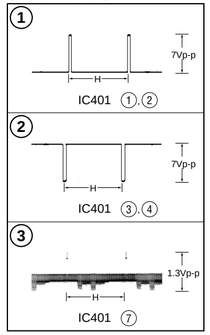


**Note on the CCD imager replacement**

- The CCD imager is not mounted for the already mounted CD-197/198 board supplied as the repair parts.
  When replacing the CD-197/198 board, remove the CCD imager from the old board and install on the new board.
- Perform all adjustments of the camera block when the CCD imager has been replaced.
- Handle the CCD imager with attention such as MOS IC as it may be broken by static electricity in the structure.
  Also, prevent the receiving light section from dust attached and strong light.

VC-195 BOARD
(SIDE B)

| | | | | | | | | | | | | | | | | | | | |
|---|---|---|---|---|---|---|---|---|---|---|---|---|---|---|---|---|---|---|---|
| C002 | A-5 | C213 | D-5 | C481 | A-1 | C774 | A-8 | L156 | C-7 | Q454 | A-1 | R112 | C-7 | R428 | B-2 | R628 | E-2 | R773 | B-8 |
| C003 | A-5 | C217 | D-4 | C482 | A-2 | C775 | A-8 | L201 | D-3 | Q455 | A-1 | R152 | D-8 | R429 | B-1 | R629 | F-1 | R774 | B-9 |
| C008 | A-4 | C218 | D-4 | C483 | A-2 | C776 | B-8 | L202 | D-4 | Q551 | G-7 | R154 | D-8 | R430 | B-1 | R630 | F-2 | R775 | A-8 |
| C009 | B-5 | C227 | D-5 | C484 | A-2 | C777 | A-8 | L203 | D-6 | Q607 | F-2 | R157 | D-8 | R432 | C-2 | R631 | G-2 | R921 | B-1 |
| C011 | B-5 | C229 | E-5 | C485 | A-1 | C778 | B-9 | L204 | D-4 | Q619 | E-3 | R179 | D-8 | R433 | C-2 | R632 | G-1 | R922 | D-1 |
| C012 | B-5 | C232 | D-3 | C504 | E-6 | C781 | B-8 | L205 | D-6 | Q620 | F-2 | R180 | D-8 | R434 | C-2 | R633 | E-2 | R923 | D-1 |
| C013 | B-6 | C233 | D-5 | C505 | E-6 | | | L206 | D-3 | Q705 | F-7 | R183 | E-8 | R452 | A-3 | R634 | E-2 | R924 | D-1 |
| C014 | B-6 | C234 | D-5 | C506 | E-7 | CN904 | A-9 | L207 | E-4 | | | R184 | E-8 | R453 | A-3 | R635 | E-2 | R925 | D-1 |
| C015 | B-5 | C235 | D-3 | C507 | E-6 | CN907 | D-9 | L209 | E-4 | R001 | A-6 | R202 | D-3 | R454 | A-3 | R636 | E-2 | R926 | G-7 |
| C016 | B-5 | C236 | D-3 | C508 | E-6 | CN910 | D-1 | L402 | C-2 | R002 | A-6 | R203 | D-4 | R455 | A-3 | R637 | G-2 | R927 | G-7 |
| C017 | B-5 | C239 | E-4 | C509 | E-7 | | | L501 | E-6 | R008 | A-4 | R204 | D-3 | R456 | A-3 | R638 | G-2 | | |
| C019 | B-5 | C241 | E-3 | C510 | E-6 | D001 | C-4 | L552 | F-7 | R009 | A-5 | R205 | D-3 | R457 | A-3 | R639 | G-2 | RB12 | C-8 |
| C020 | B-6 | C243 | F-3 | C514 | E-5 | D201 | D-3 | L553 | G-7 | R010 | B-6 | R206 | D-4 | R459 | A-3 | R640 | F-2 | RB151 | D-8 |
| C022 | B-5 | C244 | F-3 | C515 | E-5 | D202 | D-3 | L602 | E-3 | R011 | B-5 | R208 | D-3 | R460 | A-3 | R641 | F-3 | | |
| C025 | B-6 | C245 | D-4 | C518 | F-5 | D371 | E-8 | L701 | F-7 | R012 | B-5 | R210 | D-3 | R461 | A-3 | R642 | F-2 | TH401 | B-4 |
| C038 | B-6 | C246 | D-4 | C553 | G-6 | D502 | F-5 | L702 | F-7 | R013 | B-6 | R211 | D-3 | R462 | A-3 | R643 | F-2 | | |
| C040 | B-6 | C247 | D-4 | C554 | G-7 | D601 | E-2 | L704 | F-8 | R014 | B-4 | R212 | D-6 | R463 | A-3 | R644 | F-2 | X151 | D-7 |
| C042 | B-5 | C249 | E-4 | C556 | G-7 | D602 | E-2 | L751 | B-8 | R015 | B-5 | R214 | D-5 | R467 | A-2 | R645 | E-2 | X401 | B-3 |
| C043 | B-5 | C252 | F-3 | C557 | G-5 | D604 | F-2 | L752 | B-8 | R016 | B-6 | R215 | D-5 | R468 | A-2 | R646 | F-2 | X501 | F-5 |
| C048 | B-6 | C301 | B-9 | C558 | G-5 | D608 | F-1 | L753 | B-8 | R017 | B-6 | R216 | D-5 | R469 | A-2 | R647 | F-2 | | |
| C050 | C-6 | C312 | C-9 | C559 | F-7 | D609 | F-2 | | | R018 | B-5 | R217 | E-4 | R470 | A-2 | R648 | F-2 | | |
| C051 | B-5 | C371 | E-8 | C563 | F-6 | D611 | E-2 | Q003 | A-5 | R019 | B-5 | R223 | D-3 | R471 | A-2 | R649 | F-2 | | |
| C054 | B-5 | C372 | E-8 | C564 | F-7 | D910 | G-1 | Q004 | A-6 | R020 | B-4 | R224 | D-3 | R472 | A-3 | R651 | F-2 | | |
| C056 | B-5 | C378 | F-7 | C566 | G-7 | | | Q005 | A-5 | R021 | B-5 | R226 | D-4 | R473 | A-1 | R652 | F-3 | | |
| C058 | B-6 | C380 | E-7 | C569 | G-6 | FB202 | E-4 | Q006 | A-5 | R023 | B-6 | R240 | D-4 | R475 | A-1 | R653 | F-3 | | |
| C060 | C-5 | C381 | E-7 | C572 | F-6 | FB203 | E-4 | Q007 | A-6 | R025 | B-6 | R244 | D-3 | R477 | A-2 | R654 | F-3 | | |
| C066 | B-6 | C382 | F-8 | C603 | F-1 | FB204 | F-3 | Q008 | B-6 | R029 | B-5 | R246 | D-3 | R479 | A-2 | R655 | F-2 | | |
| C067 | C-6 | C383 | E-8 | C607 | E-2 | FB205 | F-3 | Q009 | B-6 | R031 | B-5 | R247 | D-3 | R480 | A-2 | R662 | E-3 | | |
| C068 | C-6 | C384 | E-8 | C610 | F-2 | FB206 | D-4 | Q010 | B-5 | R040 | B-5 | R248 | E-3 | R481 | A-2 | R663 | F-3 | | |
| C069 | C-5 | C385 | E-8 | C611 | F-2 | FB501 | E-5 | Q011 | B-5 | R041 | B-5 | R249 | E-3 | R482 | A-2 | R665 | F-3 | | |
| C070 | C-6 | C387 | F-8 | C613 | E-1 | FB502 | E-6 | Q012 | B-5 | R042 | B-5 | R250 | F-3 | R483 | A-1 | R678 | F-3 | | |
| C072 | C-6 | C388 | E-8 | C625 | E-2 | FB503 | E-5 | Q016 | B-5 | R047 | B-5 | R254 | D-1 | R484 | A-1 | R686 | E-2 | | |
| C074 | C-6 | C402 | C-1 | C626 | E-2 | FB504 | E-5 | Q017 | B-6 | R048 | B-5 | R255 | E-5 | R485 | A-1 | R687 | E-2 | | |
| C076 | C-5 | C413 | B-2 | C627 | F-2 | FB505 | E-5 | Q018 | C-5 | R049 | B-6 | R257 | D-4 | R486 | B-1 | R689 | F-3 | | |
| C077 | C-5 | C451 | A-3 | C630 | F-3 | | | Q019 | C-6 | R050 | B-6 | R304 | B-9 | R487 | A-1 | R690 | F-2 | | |
| C080 | C-5 | C452 | A-3 | C634 | F-3 | | | Q021 | B-6 | R051 | B-6 | R305 | C-9 | R504 | E-6 | R691 | E-2 | | |
| C083 | C-5 | C453 | A-3 | C636 | F-2 | IC152 | C-8 | Q023 | C-6 | R056 | B-6 | R329 | A-6 | R505 | E-6 | R692 | F-1 | | |
| C086 | C-4 | C454 | A-3 | C704 | F-7 | IC201 | E-5 | Q025 | C-6 | R058 | B-6 | R330 | A-7 | R508 | E-5 | R704 | G-8 | | |
| C087 | C-4 | C455 | A-3 | C714 | F-8 | IC204 | F-4 | Q026 | C-6 | R066 | B-6 | R371 | D-8 | R510 | E-5 | R705 | G-7 | | |
| C090 | C-6 | C456 | A-4 | C715 | F-8 | IC371 | E-7 | Q030 | C-5 | R067 | C-6 | R372 | D-8 | R511 | E-5 | R716 | G-8 | | |
| C152 | D-8 | C457 | A-3 | C751 | B-6 | IC401 | C-2 | Q031 | C-5 | R068 | C-7 | R373 | D-9 | R512 | F-5 | R717 | F-8 | | |
| C157 | E-8 | C458 | A-4 | C752 | A-7 | IC403 | B-2 | Q032 | C-7 | R069 | C-5 | R374 | D-8 | R527 | E-5 | R718 | F-7 | | |
| C158 | D-8 | C459 | A-4 | C753 | A-7 | IC404 | B-2 | Q035 | C-4 | R069 | C-6 | R375 | D-8 | R552 | G-6 | R719 | F-8 | | |
| C159 | C-8 | C460 | A-4 | C754 | A-7 | IC451 | A-4 | Q037 | C-4 | R070 | C-6 | R376 | D-8 | R555 | G-7 | R723 | F-7 | | |
| C174 | B-8 | C461 | A-3 | C755 | A-7 | IC452 | A-2 | Q038 | C-5 | R076 | C-6 | R377 | E-8 | R563 | G-5 | R752 | A-7 | | |
| C175 | D-8 | C462 | A-4 | C756 | A-7 | IC501 | E-6 | Q039 | C-5 | R077 | C-6 | R378 | E-8 | R564 | G-6 | R753 | A-7 | | |
| C176 | D-8 | C463 | A-3 | C757 | A-7 | IC552 | G-6 | Q041 | B-5 | R078 | C-6 | R379 | E-7 | R566 | G-5 | R754 | B-6 | | |
| C182 | B-8 | C464 | A-3 | C758 | A-8 | IC602 | E-2 | Q042 | C-4 | R079 | C-6 | R382 | E-8 | R567 | G-6 | R755 | B-6 | | |
| C183 | D-8 | C465 | B-4 | C759 | B-6 | IC751 | A-8 | Q151 | D-8 | R080 | C-6 | R383 | E-8 | R570 | F-5 | R757 | A-7 | | |
| C190 | D-8 | C466 | B-3 | C760 | B-6 | | | Q202 | D-3 | R083 | C-5 | R384 | E-7 | R579 | G-6 | R758 | A-7 | | |
| C191 | C-7 | C467 | B-3 | C761 | B-8 | L002 | B-4 | Q203 | D-3 | R084 | C-5 | R385 | E-8 | R582 | G-6 | R759 | A-7 | | |
| C192 | C-7 | C468 | B-3 | C762 | B-8 | L003 | B-4 | Q204 | D-5 | R087 | C-5 | R386 | F-8 | R603 | F-2 | R760 | B-8 | | |
| C202 | D-3 | C469 | B-4 | C763 | B-8 | L007 | C-6 | Q205 | E-5 | R088 | C-5 | R386 | F-8 | R604 | F-2 | R761 | A-8 | | |
| C203 | D-3 | C470 | B-4 | C764 | B-8 | L008 | C-6 | Q208 | D-6 | R090 | C-5 | R388 | E-8 | R608 | F-2 | R762 | A-8 | | |
| C204 | D-4 | C471 | B-4 | C765 | A-8 | L010 | C-6 | Q217 | D-4 | R094 | C-5 | R389 | E-8 | R612 | E-1 | R763 | A-8 | | |
| C205 | E-4 | C473 | A-1 | C766 | A-8 | L011 | C-6 | Q218 | D-4 | R095 | C-7 | R403 | C-2 | R618 | F-1 | R764 | B-8 | | |
| C206 | D-4 | C474 | A-2 | C767 | B-8 | L014 | C-5 | Q306 | B-9 | R097 | C-5 | R404 | C-3 | R619 | F-1 | R765 | B-8 | | |
| C207 | D-3 | C475 | A-2 | C768 | B-8 | L015 | C-5 | Q307 | C-9 | R100 | C-5 | R415 | B-2 | R620 | F-1 | R766 | A-8 | | |
| C208 | D-3 | C476 | A-2 | C769 | A-8 | L017 | C-5 | Q311 | A-6 | R104 | C-5 | R416 | B-2 | R621 | F-1 | R767 | B-8 | | |
| C209 | D-6 | C477 | A-2 | C770 | A-8 | L019 | B-6 | Q312 | A-7 | R105 | C-6 | R417 | B-2 | R622 | F-2 | R768 | A-8 | | |
| C210 | D-6 | C478 | A-2 | C771 | B-8 | L152 | D-8 | Q451 | B-3 | R106 | C-6 | R418 | B-2 | R624 | F-1 | R770 | A-8 | | |
| C211 | D-3 | C479 | A-2 | C772 | A-8 | L153 | D-7 | Q452 | B-4 | R109 | B-4 | R426 | C-2 | R625 | F-2 | R771 | A-8 | | |
| C212 | D-3 | C480 | A-2 | C773 | B-8 | L154 | D-7 | Q453 | B-4 | R110 | B-5 | R427 | B-2 | R627 | E-2 | R772 | A-8 | | |

- **For Printed Wiring Boards.**
- This board is four-layer print board. However, the patterns of layers 2 to 3 have not been included in the diagram.

There are few cases that the part isn't mounted in this model is printed on this diagram.

- Chip transistor

Chip diode

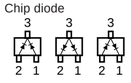


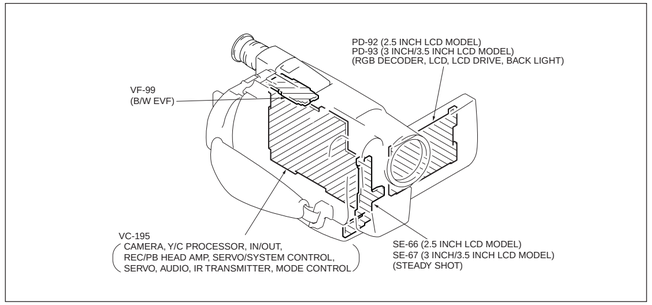
PD-92 (2.5 INCH LCD MODEL)
PD-93 (3 INCH/3.5 INCH LCD MODEL)
(RGB DECODER, LCD, LCD DRIVE, BACK LIGHT)
VF-99
(B/W EVF)
VC-195
CAMERA, Y/C PROCESSOR, IN/OUT,
REC/PB HEAD AMP, SERVO/SYSTEM CONTROL,
SERVO, AUDIO, IR TRANSMITTER, MODE CONTROL
SE-66 (2.5 INCH LCD MODEL)
SE-67 (3 INCH/3.5 INCH LCD MODEL)
(STEADY SHOT)



**VC-195 (CAMERA, Y/C PROCESSOR, IN/OUT, REC/PB HEAD AMP, SERVO/SYSTEM CONTROL, SERVO, AUDIO, IR TRANSMITTER, MODE CONTROL) PRINTED WIRING BOARD**

– Ref No. VC-195 BOARD: 1,000 series –

## VC-195 BOARD (SIDE B)

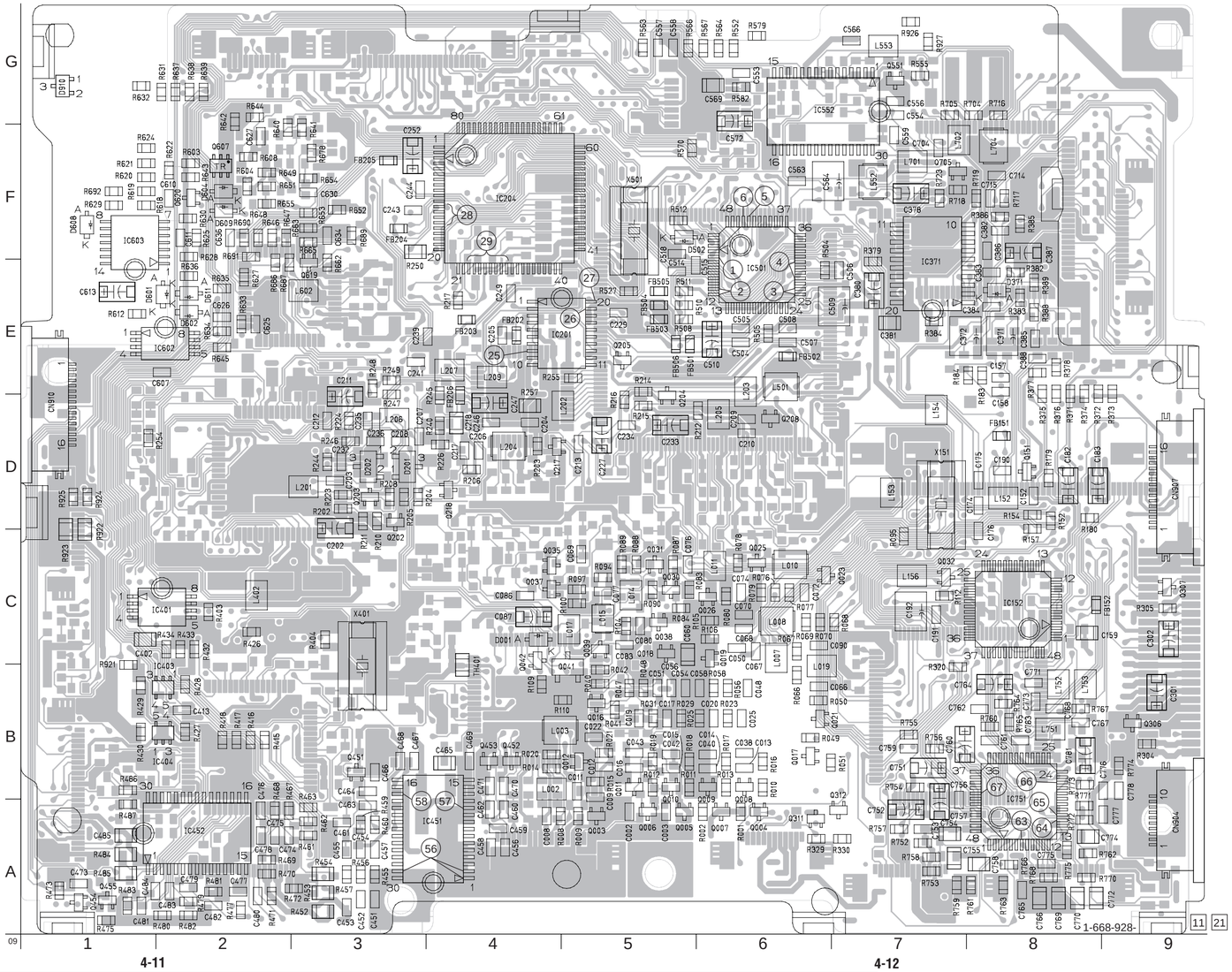




**CAMERA, Y/C PROCESSOR, IN/OUT, REC/PB HEAD AMP, SERVO/SYSTEM CONTROL, SERVO, AUDIO, IR TRANSMITTER, MODE CONTROL**

VC-195 (SIDE B)

## VC-195 BOARD (SIDE A)

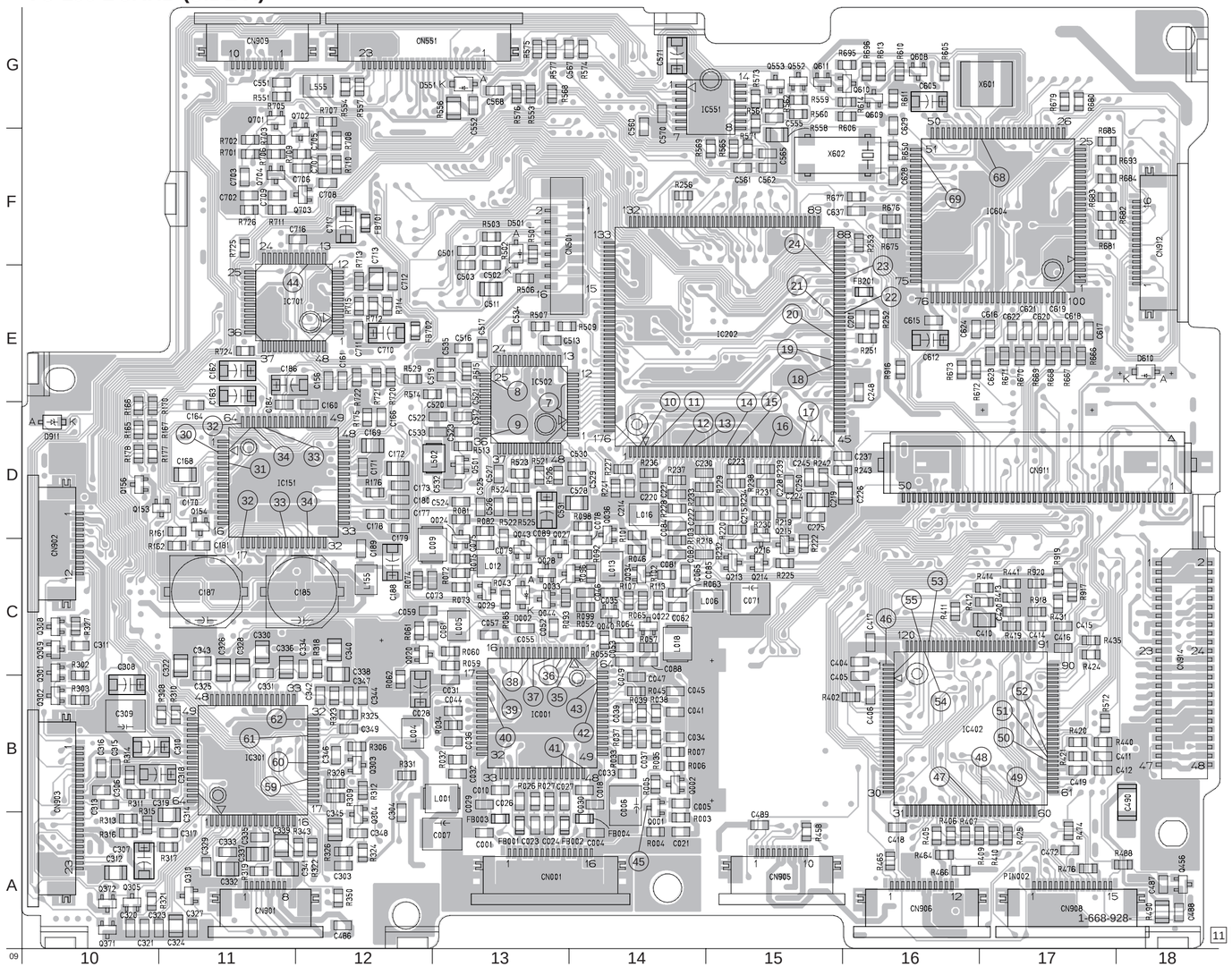


VC-195 BOARD (SIDE A)

| | | | | | | | | | | | |
|---|---|---|---|---|---|---|---|---|---|---|---|
| C001 | A-13 | C328 | C-11 | CN908 | A-17 | R074 | C-12 | R527 | B-17 |
| C004 | A-14 | C330 | C-11 | CN909 | G-11 | R075 | C-13 | R529 | E-12 |
| C004 | B-13 | C331 | C-11 | CN911 | D-17 | R081 | D-13 | R551 | G-11 |
| C005 | B-14 | C332 | A-11 | CN912 | F-18 | R082 | D-13 | R552 | G-15 |
| C006 | B-14 | C333 | A-11 | CN914 | B-18 | R085 | C-13 | R553 | G-13 |
| C007 | A-13 | C334 | C-12 | | | R092 | C-14 | R554 | G-12 |
| C010 | B-13 | C335 | A-11 | D002 | C-13 | R093 | C-13 | R556 | G-13 |
| C018 | B-14 | C336 | C-11 | D501 | F-13 | R096 | C-14 | R557 | G-12 |
| C021 | A-14 | C337 | A-11 | D551 | G-13 | R098 | D-14 | R558 | F-15 |
| C023 | A-13 | C338 | B-12 | D610 | E-18 | R099 | C-14 | R559 | G-15 |
| C024 | A-13 | C339 | A-11 | D911 | D-10 | R101 | D-14 | R560 | G-15 |
| C026 | B-13 | C340 | C-12 | | | R102 | C-14 | R561 | G-15 |
| C027 | B-13 | C341 | A-11 | FB001 | A-13 | R103 | C-14 | R562 | G-15 |
| C028 | B-12 | C342 | B-12 | FB002 | A-13 | R107 | C-14 | R565 | F-15 |
| C029 | B-13 | C343 | C-11 | FB003 | A-13 | R113 | C-14 | R568 | G-13 |
| C030 | B-14 | C344 | B-12 | FB004 | A-14 | R161 | D-11 | R569 | F-15 |
| C031 | B-13 | C345 | A-12 | FB201 | E-16 | R162 | C-11 | R571 | F-15 |
| C032 | B-13 | C346 | B-12 | FB701 | F-12 | R165 | D-10 | R573 | G-15 |
| C033 | B-14 | C347 | B-12 | FB702 | E-12 | R166 | D-10 | R574 | G-14 |
| C034 | B-14 | C348 | A-12 | | | R167 | D-10 | R575 | G-13 |
| C035 | C-14 | C349 | B-12 | IC001 | B-13 | R170 | D-10 | R576 | G-13 |
| C036 | B-13 | C404 | C-16 | IC151 | D-11 | R175 | D-12 | R577 | G-13 |
| C037 | B-14 | C405 | B-16 | IC202 | E-15 | R176 | D-12 | R605 | G-16 |
| C039 | B-14 | C406 | B-16 | IC301 | B-11 | R177 | D-10 | R606 | G-16 |
| C041 | B-14 | C410 | C-17 | IC402 | B-16 | R178 | D-10 | R610 | G-16 |
| C045 | B-14 | C411 | B-17 | IC502 | D-13 | R218 | D-14 | R611 | G-16 |
| C046 | C-14 | C412 | B-17 | IC551 | G-15 | R219 | D-15 | R613 | G-16 |
| C047 | B-14 | C414 | C-17 | IC701 | E-11 | R220 | D-15 | R614 | G-16 |
| C049 | C-14 | C415 | C-17 | | | R222 | C-15 | R650 | F-16 |
| C052 | C-13 | C416 | C-17 | L001 | B-13 | R225 | C-15 | R666 | E-17 |
| C053 | C-14 | C417 | C-16 | L004 | B-12 | R227 | D-14 | R667 | E-17 |
| C055 | C-13 | C418 | A-16 | L005 | C-13 | R228 | D-14 | R668 | E-17 |
| C057 | C-13 | C419 | B-17 | L006 | C-15 | R229 | D-14 | R669 | E-17 |
| C059 | C-12 | C420 | C-17 | L009 | C-13 | R230 | D-15 | R670 | E-17 |
| C061 | C-13 | C472 | A-17 | L012 | C-13 | R231 | D-15 | R671 | E-17 |
| C062 | C-14 | C486 | A-12 | L013 | C-14 | R232 | C-15 | R672 | E-16 |
| C065 | C-14 | C487 | A-18 | L016 | D-14 | R233 | D-14 | R673 | E-16 |
| C071 | C-15 | C488 | A-18 | L018 | C-14 | R234 | C-15 | R675 | F-16 |
| C073 | C-13 | C489 | A-15 | L155 | C-12 | R236 | D-14 | R676 | F-16 |
| C075 | C-13 | C490 | B-18 | L502 | D-13 | R237 | D-14 | R679 | G-17 |
| C078 | C-14 | C501 | F-13 | L555 | G-12 | R238 | D-15 | R680 | G-17 |
| C079 | C-13 | C502 | E-13 | | | R239 | D-15 | R681 | F-17 |
| C081 | C-14 | C503 | E-13 | Q001 | B-14 | R241 | D-14 | R682 | F-17 |
| C082 | C-14 | C511 | E-13 | Q002 | B-14 | R242 | D-15 | R683 | F-17 |
| C084 | C-14 | C512 | D-13 | Q020 | C-12 | R243 | D-16 | R684 | F-17 |
| C085 | C-14 | C513 | E-13 | Q022 | C-14 | R251 | E-16 | R685 | F-17 |
| C088 | C-14 | C516 | E-13 | Q024 | C-13 | R252 | E-16 | R693 | F-17 |
| C089 | C-13 | C517 | E-13 | Q027 | C-13 | R253 | F-16 | R695 | G-16 |
| C156 | E-12 | C519 | E-13 | Q028 | C-13 | R256 | F-14 | R696 | G-16 |
| C160 | D-12 | C520 | E-13 | Q029 | C-13 | R302 | C-10 | R701 | F-11 |
| C161 | E-12 | C521 | E-13 | Q033 | C-14 | R303 | B-10 | R702 | F-11 |
| C162 | E-11 | C522 | D-13 | Q034 | C-14 | R306 | B-12 | R703 | F-11 |
| C163 | E-11 | C523 | D-13 | Q036 | D-14 | R308 | B-11 | R706 | F-11 |
| C164 | D-11 | C524 | D-13 | Q040 | C-14 | R309 | B-12 | R707 | G-12 |
| C166 | D-12 | C525 | D-13 | Q043 | C-13 | R310 | B-11 | R708 | F-12 |
| C168 | D-11 | C526 | D-13 | Q044 | C-13 | R311 | B-10 | R709 | F-12 |
| C169 | D-12 | C527 | D-13 | Q153 | D-11 | R312 | B-12 | R710 | F-12 |
| C170 | D-11 | C528 | D-14 | Q154 | D-11 | R313 | A10 | R711 | F-11 |
| C171 | D-12 | C529 | D-14 | Q156 | D-10 | R314 | B-10 | R712 | E-12 |
| C172 | D-12 | C530 | D-14 | Q213 | C-15 | R315 | A10 | R713 | E-12 |
| C173 | D-12 | C531 | D-13 | Q214 | C-15 | R316 | A10 | R714 | E-12 |
| C177 | D-12 | C532 | D-13 | Q215 | C-15 | R317 | A-11 | R715 | E-12 |
| C178 | D-12 | C533 | D-13 | Q216 | C-15 | R318 | C-12 | R720 | E-12 |
| C179 | D-12 | C534 | E-13 | Q301 | C-10 | R319 | A-11 | R721 | E-12 |
| C180 | D-12 | C535 | E-13 | Q302 | B-10 | R321 | A10 | R722 | E-12 |
| C181 | C-11 | C551 | G-11 | Q303 | B-12 | R322 | A-12 | R724 | E-11 |
| C184 | D-11 | C552 | G-13 | Q304 | A-12 | R323 | B-12 | R725 | F-11 |
| C185 | C-12 | C555 | G-15 | Q305 | A10 | R325 | B-12 | R726 | F-11 |
| C186 | E-11 | C560 | F-14 | Q308 | C-10 | R326 | A-12 | R916 | E-16 |
| C187 | C-11 | C561 | F-15 | Q309 | C-10 | R327 | C-1 | R917 | C-17 |
| C188 | C-12 | C562 | F-15 | Q310 | A-11 | R328 | B-12 | R918 | C-17 |
| C189 | C-12 | C565 | F-15 | Q329 | A-11 | R331 | B-12 | R919 | C-17 |
| C201 | E-16 | C567 | G-14 | Q371 | A10 | R343 | A-12 | R920 | C-17 |
| C214 | D-14 | C568 | G-13 | Q372 | A10 | R350 | A-12 | | |
| C215 | D-15 | C570 | G-14 | Q456 | A-18 | R402 | B-16 | X601 | G-17 |
| C219 | D-15 | C571 | G-14 | Q501 | D-13 | R405 | A-16 | X602 | F-15 |
| C220 | D-14 | C604 | F-17 | Q553 | G-15 | R406 | A-16 | | |
| C221 | D-14 | C605 | G-16 | Q608 | G-16 | R407 | A-16 | | |
| C222 | D-14 | C612 | E-16 | Q609 | G-16 | R409 | A-16 | | |
| C223 | D-15 | C615 | E-16 | Q610 | G-16 | R410 | A-17 | | |
| C224 | D-15 | C616 | E-17 | Q611 | G-15 | R411 | C-16 | | |
| C225 | D-15 | C617 | E-17 | Q701 | G-11 | R412 | C-17 | | |
| C226 | D-16 | C618 | E-17 | Q702 | F-12 | R413 | C-17 | | |
| C228 | D-15 | C619 | E-17 | Q703 | F-12 | R414 | C-17 | | |
| C230 | D-14 | C620 | E-17 | Q704 | F-11 | R419 | C-17 | | |
| C237 | D-16 | C621 | E-17 | | | R420 | B-17 | | |
| C245 | D-15 | C622 | E-17 | R003 | A-14 | R421 | B-17 | | |
| C248 | E-16 | C623 | E-17 | R004 | A-14 | R424 | C-17 | | |
| C250 | D-15 | C624 | E-16 | R005 | B-14 | R425 | A-17 | | |
| C303 | A-12 | C628 | F-16 | R006 | B-14 | R431 | C-17 | | |
| C304 | A-12 | C629 | F-16 | R007 | B-14 | R435 | C-17 | | |
| C306 | B-10 | C637 | F-16 | R026 | B-13 | R440 | B-17 | | |
| C307 | A10 | C702 | F-11 | R027 | B-13 | R441 | C-17 | | |
| C308 | B-10 | C703 | F-11 | R032 | B-13 | R458 | A-15 | | |
| C309 | B-10 | C705 | F-12 | R033 | B-14 | R464 | A-16 | | |
| C310 | B-10 | C706 | F-12 | R034 | B-13 | R465 | A-16 | | |
| C311 | C-11 | C707 | F-12 | R035 | B-14 | R466 | A-16 | | |
| C312 | A10 | C708 | F-12 | R037 | B-14 | R474 | A-17 | | |
| C313 | B-10 | C709 | F-11 | R038 | B-14 | R476 | A-17 | | |
| C314 | A-11 | C710 | E-12 | R039 | B-14 | R488 | A-18 | | |
| C315 | B-10 | C711 | E-12 | R043 | C-13 | R490 | A-18 | | |
| C316 | B-10 | C712 | E-12 | R045 | B-14 | R501 | F-13 | | |
| C317 | A-11 | C713 | E-12 | R046 | C-14 | R502 | F-13 | | |
| C318 | B-10 | C716 | F-12 | R052 | C-14 | R503 | F-13 | | |
| C319 | B-11 | C717 | F-12 | R055 | C-14 | R507 | E-13 | | |
| C320 | A10 | | | R057 | C-14 | R509 | E-13 | | |
| C321 | A10 | CN001 | A-13 | R059 | C-13 | R513 | D-13 | | |
| C322 | C-11 | CN501 | F-14 | R060 | C-13 | R514 | E-13 | | |
| C323 | A-11 | CN551 | G-12 | R062 | B-12 | R521 | D-13 | | |
| C324 | A-11 | CN901 | A-11 | R063 | C-14 | R522 | D-13 | | |
| C324 | A-12 | CN902 | C-10 | R064 | C-14 | R523 | D-13 | | |
| C325 | C-11 | CN903 | B-10 | R065 | C-14 | R524 | D-13 | | |
| C326 | C-11 | CN905 | A-15 | R072 | C-13 | R525 | D-13 | | |
| C327 | A-11 | CN906 | A-16 | R073 | C-13 | R526 | D-13 | | |

**CAMERA, Y/C PROCESSOR, IN/OUT, REC/PB HEAD AMP, SERVO/SYSTEM CONTROL, SERVO, AUDIO, IR TRANSMITTER, MODE CONTROL**
VC-195 (SIDE A)

## VC-195 BOARD (1/10)

1 CAMERA REC
NTSC: 28.636 MHz
PAL : 28.375 MHz
2.3Vp-p
IC501 (5)

2 CAMERA REC
NTSC: 14.32 MHz
PAL : 14.18 MHz
2.3Vp-p
IC501 (11),(12)

3 CAMERA REC
7Vp-p
IC501 (25),(26)

4 CAMERA REC
7Vp-p
IC501 (28),(31)

5 CAMERA REC
3Vp-p
IC501 (44)

6 CAMERA REC
3Vp-p
IC501 (45)

7 CAMERA REC
3.2Vp-p
0.14usec
IC502 (2)—(10)

8 CAMERA REC
1.3Vp-p
IC502 (26)

9 PB
0.4Vp-p
IC502 (36)

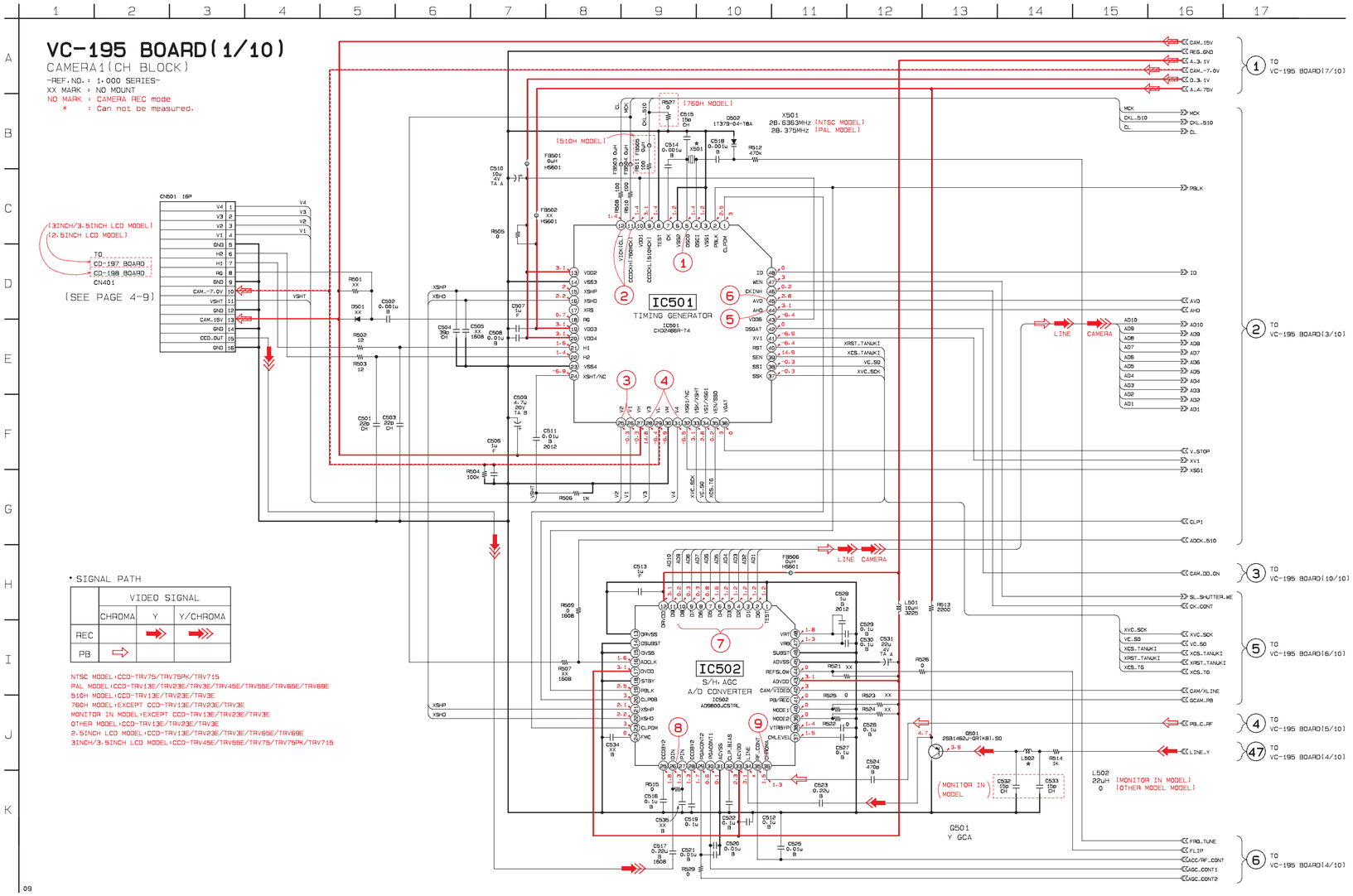

• **For schematic diagrams.**
• Refer to page 4–11 for Printed Wiring Board.

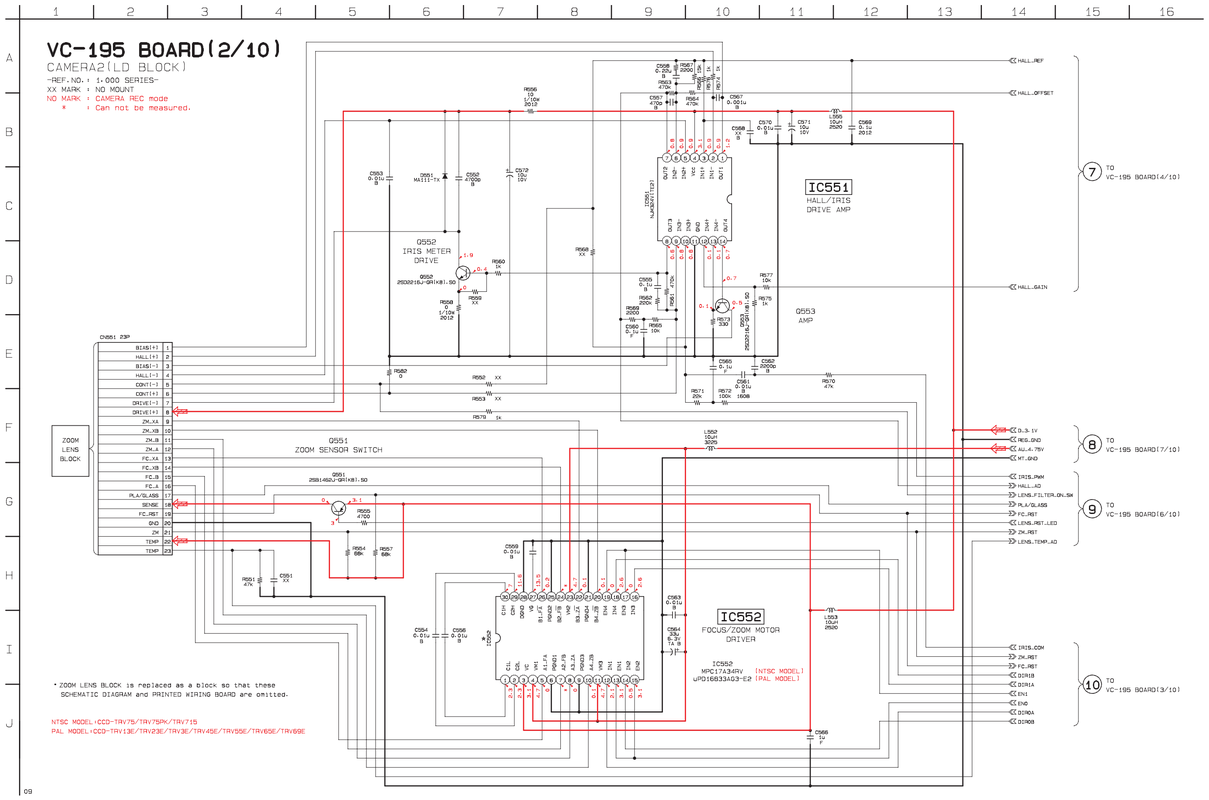

- **For schematic diagrams.**
- Refer to page 4–11 for Printed Wiring Board.

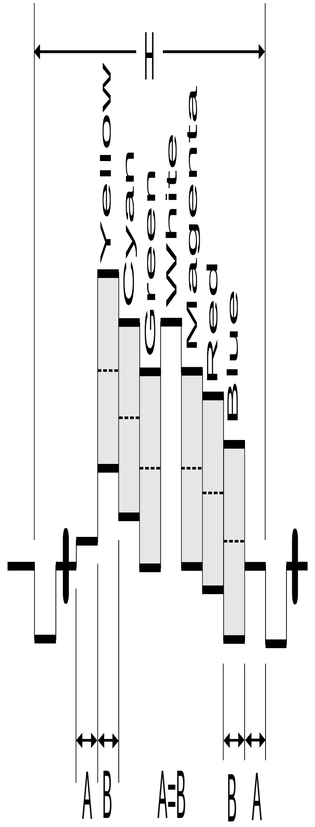


# VC-195 BOARD(3/10)

Y/C PROCESSOR(CL BLOCK)

-REF.NO.: 1,000 SERIES-
XX MARK : NO MOUNT
NO MARK : CAMERA REC mode

[TBC+DNR&MEMORY MODEL]

CAMERA LINE

IC202
Y/C PROCESSOR

IC204
MEMORY
EDS64128AB-75 [TBC+DNR MODEL]
EDS6316M-75 [TBC+DNR&MEMORY MODEL]

IC201
CHARACTER GENERATOR

Q204 Y BUFFER
Q208 Y TRAP SWITCH
Q214 B-Y BUFFER
Q213 R-Y BUFFER
Q215 Y BUFF
Q217 PB C AMP
Q218 MUTE SWITCH
Q202-203 VCO

L205-209
22uH 10u [HI8 MODEL]
33uH 33u [STANDARD 8 MODEL]

C.OUT
Y.OUT
C.INF
Y.INF
PANEL.V
PANEL.U
PANEL.Y
8bit A/D

[EXCEPT TBC+DNR&MEMORY MODEL] [TBC+DNR&MEMORY MODEL]

[PLAYER MODEL]

[TBC+DNR/TBC+DNR&MEMORY MODEL]

CAMERA LINE

- SIGNAL PATH

| | VIDEO SIGNAL | | |
|---|---|---|---|
| | CHROMA | Y | Y/CHROMA |
| REC | ➡ | ➡ | ➡ |
| PB | ⇨ | | |

- SIGNAL PATH

| | REC | REC/PB | PB |
|---|---|---|---|
| Ref. signal | ➡ | | ⇨ |

HI8 MODEL:CCD-TRV45E/TRV55E/TRV65E/TRV69E/TRV75/TRV75PK/TRV715
STANDARD 8 MODEL:CCD-TRV13E/TRV23E/TRV3E
PLAYER MODEL:EXCEPT CCD-TRV45E/TRV55E/TRV65E(Chinese)/TRV75/TRV75PK/TRV715
TBC+DNR MODEL:CCD-TRV45E/TRV55E/TRV65E/TRV75/TRV75PK/TRV715
TBC+DNR&MEMORY MODEL:CCD-TRV55E

• **For schematic diagrams.**
• Refer to page 4–11 for Printed Wiring Board.

# VC-195 BOARD(4/10)

IN/OUT(IO BLOCK)

-REF.NO. : 1-000 SERIES-
XX MARK : NO MOUNT

NO MARK : CAMERA REC mode
* : Can not be measured.

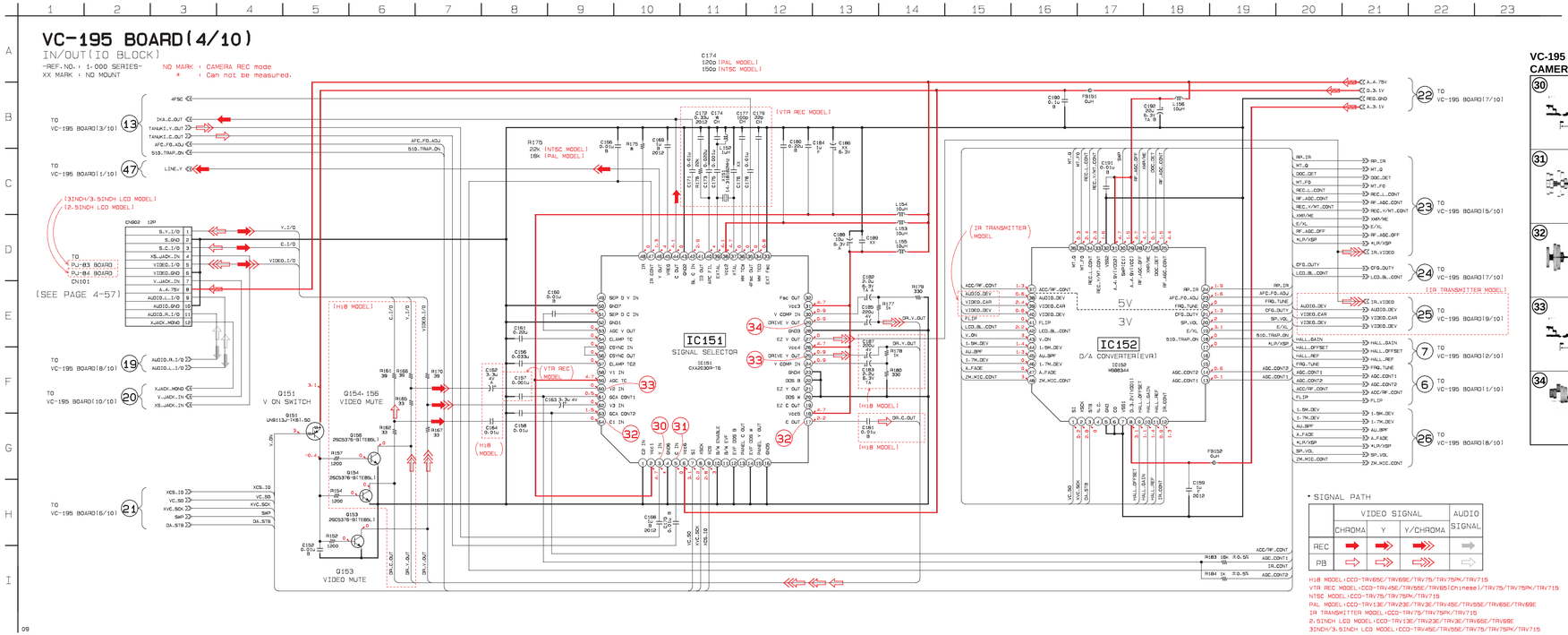


## VC-195 BOARD (4/10)
## CAMERA REC

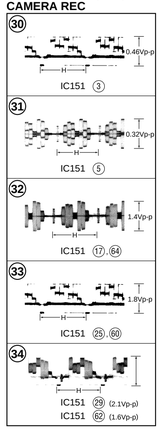


• SIGNAL PATH

| | VIDEO SIGNAL | | | AUDIO |
|---|---|---|---|---|
| | CHROMA | Y | Y/CHROMA | SIGNAL |
| REC | ⇨ | ➡ | ➡ | ⇨ |
| PB | ⇦ | ⇦ | ⇦ | ⇦ |

H18 MODEL:CCD-TRV65E/TRV69E/TRV75/TRV75PK/TRV715
VTR REC MODEL:CCD-TRV45E/TRV55E/TRV65E(Chinese)/TRV75/TRV75PK/TRV715
NTSC MODEL:CCD-TRV75/TRV75PK/TRV715
PAL MODEL:CCD-TRV13E/TRV23E/TRV3E/TRV45E/TRV55E/TRV65E/TRV69E
IR TRANSMITTER MODEL:CCD-TRV75/TRV75PK/TRV715
2.5INCH LCD MODEL:CCD-TRV13E/TRV23E/TRV3E/TRV65E/TRV69E
3INCH/3.5INCH LCD MODEL:CCD-TRV45E/TRV55E/TRV75/TRV75PK/TRV715

- For schematic diagrams.
- Refer to page 4–11 for Printed Wiring Board.

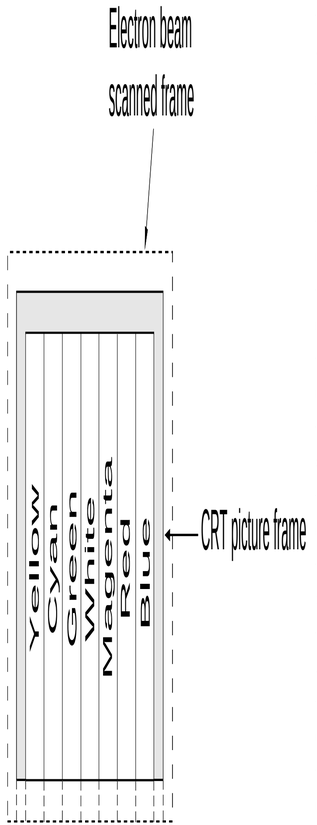


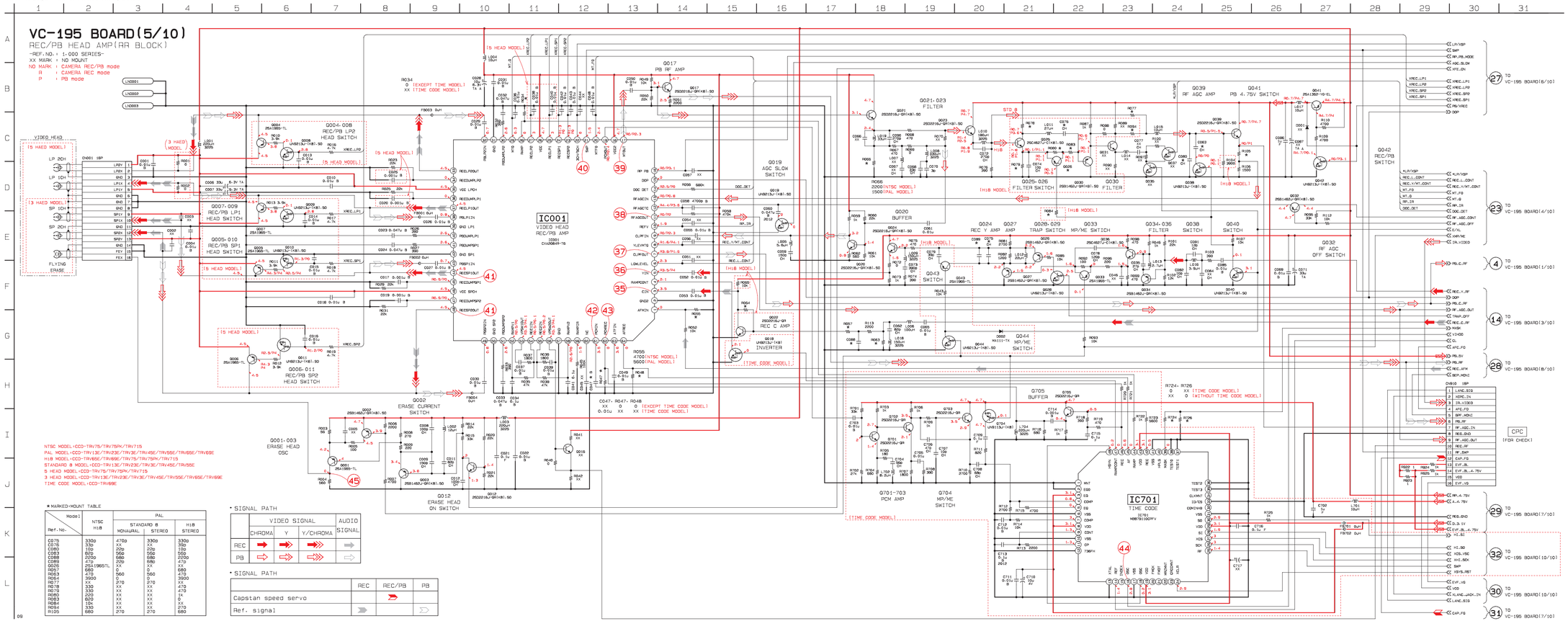


NTSC MODEL:CCD-TRV75/TRV75PK/TRV715
PAL MODEL:CCD-TRV13E/TRV23E/TRV3E/TRV45E/TRV55E/TRV65E/TRV69E
H18 MODEL:CCD-TRV65E/TRV69E/TRV75/TRV75PK/TRV715
STANDARD 8 MODEL:CCD-TRV13E/TRV23E/TRV3E/TRV45E/TRV55E
5 HEAD MODEL:CCD-TRV75/TRV75PK/TRV715
3 HEAD MODEL:CCD-TRV13E/TRV23E/TRV3E/TRV45E/TRV55E/TRV65E/TRV69E
TIME CODE MODEL:CCD-TRV69E

★MARKED:MOUNT TABLE

| Ref.No. \ Model | NTSC H18 | PAL STANDARD 8 MONAURAL | PAL STANDARD 8 STEREO | PAL H18 STEREO |
|---|---|---|---|---|
| C075 | 330p | 470p | 330p | 330p |
| C076 | 33p | XX | XX | 39p |
| C080 | 10p | 22p | 22p | 10p |
| C083 | 82p | 56p | 56p | 56p |
| C088 | 220p | 68p | 68p | 220p |
| C089 | 47p | 22p | 68p | 47p |
| G026 | 2SA1965TL | XX | XX | XX |
| R057 | 680 | 0 | 0 | 680 |
| R063 | 470 | 560 | 560 | 470 |
| R064 | 3900 | 0 | 0 | 3900 |
| R077 | XX | 270 | 270 | XX |
| R078 | 330 | XX | XX | 470 |
| R079 | 330 | XX | XX | 470 |
| R080 | 220 | XX | XX | 0 |
| R083 | 820 | XX | XX | 0 |
| R084 | 10k | XX | XX | XX |
| R094 | 330 | XX | XX | 270 |
| R105 | 680 | 270 | 270 | 680 |

• SIGNAL PATH

| | VIDEO SIGNAL CHROMA | VIDEO SIGNAL Y | VIDEO SIGNAL Y/CHROMA | AUDIO SIGNAL |
|---|---|---|---|---|
| REC | ➡ | ➡ | ➡ | ⇨ |
| PB | ⇨ | ⇨ | ⇨ | ⇨ |

• SIGNAL PATH

| | REC | REC/PB | PB |
|---|---|---|---|
| Capstan speed servo | | ➡ | |
| Ref. signal | ➡ | | ⇨ |

• **For schematic diagrams.**
• Refer to page 4–11 for Printed Wiring Board.

# VC-195 BOARD(6/10)

SERVO/SYSTEM CONTROL
(MC BLOCK)

-REF.NO. : 1-000 SERIES-
XX MARK : NO MOUNT
NO MARK : CAMERA REC mode
* : Can not be measured.

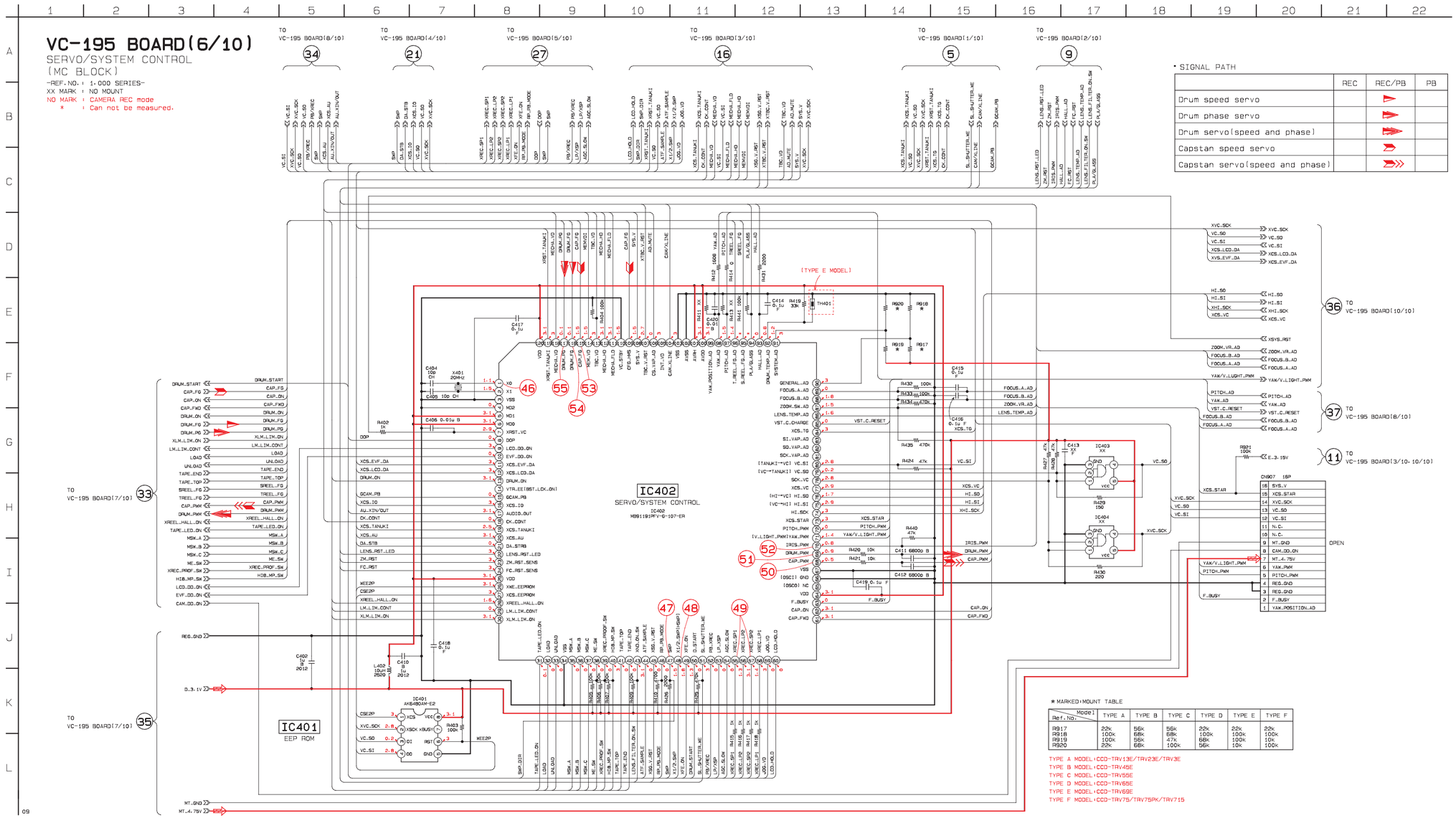


• SIGNAL PATH

| | REC | REC/PB | PB |
|---|---|---|---|
| Drum speed servo | | ▶ | |
| Drum phase servo | | ▶ | |
| Drum servo(speed and phase) | | ▶ | |
| Capstan speed servo | | ▶ | |
| Capstan servo(speed and phase) | | ▶ | |

* MARKED·MOUNT TABLE

| Ref.NO. \ Model | TYPE A | TYPE B | TYPE C | TYPE D | TYPE E | TYPE F |
|---|---|---|---|---|---|---|
| R917 | 22k | 56k | 56k | 22k | 22k | 22k |
| R918 | 100k | 68k | 68k | 100k | 100k | 100k |
| R919 | 100k | 56k | 47k | 68k | 100k | 10k |
| R920 | 22k | 68k | 100k | 56k | 10k | 100k |

TYPE A MODEL·CCD-TRV13E/TRV23E/TRV3E
TYPE B MODEL·CCD-TRV45E
TYPE C MODEL·CCD-TRV55E
TYPE D MODEL·CCD-TRV65E
TYPE E MODEL·CCD-TRV69E
TYPE F MODEL·CCD-TRV75/TRV75PK/TRV715

## VC-195 BOARD (6/10)
## CAMERA REC

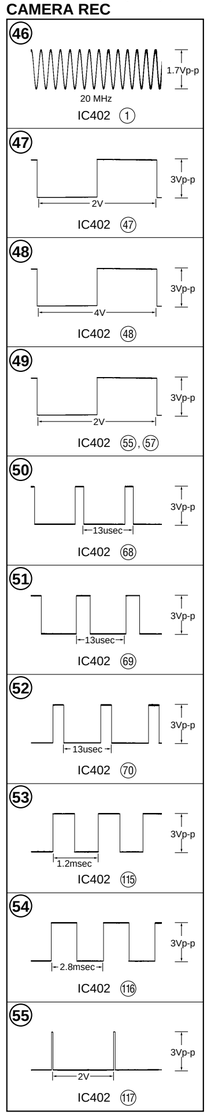

• **For schematic diagrams.**
• Refer to page 4–11 for Printed Wiring Board.

# VC-195 BOARD(7/10)

SERVO(SB BLOCK)

-REF.NO. : 1-000 SERIES-
XX MARK : NO MOUNT
NO MARK : CAMERA REC mode
* : Can not be measured.

• SIGNAL PATH

| | REC | REC/PB | PB |
|---|---|---|---|
| Drum speed servo | | | |
| Drum phase servo | | | |
| Drum servo(speed and phase) | | | |
| Capstan phase servo | | | |
| Capstan servo(speed and phase) | | | |

NTSC MODEL:CCD-TRV75/TRV75PK/TRV715
PAL MODEL:CCD-TRV13E/TRV23E/TRV3E/TRV45E/TRV55E/TRV65E/TRV69E
IR TRANSMITTER MODEL:CCD-TRV75/TRV75PK/TRV715

MECHA DECK

FP-220 (FLEXIBLE)

FP-248 (FLEXIBLE)

FP-356 (FLEXIBLE)

FP-249 (FLEXIBLE)

FP-355 (FLEXIBLE)

FP-221 (FLEXIBLE)

IC451
DRUM MOTOR DRIVER
DRUM PG/FG WAVEFORM SHAPER

IC452
LOADING MOTOR DRIVE SENSOR AMP

Q454·455
CAPSTAN ERROR AMP

Q452·453
DRUM MOTOR ON SWITCH

IC452
LB8112V-TLM (NTSC MODEL)
TA8482FN-EL (PAL MODEL)

Q456
TAPE LED ON/OFF SWITCH

R482·R472
10k 10k (NTSC MODEL)
5.6k 22k (PAL MODEL)

TO VC-195 BOARD(5/10)
TO VC-195 BOARD(6/10)
TO VC-195 BOARD(4/10)
TO VC-195 BOARD(10/10)
TO VC-195 BOARD(10/10)
TO VC-195 BOARD(9/10) (IR TRANSMITTER MODEL)
TO VC-195 BOARD(8/10)
TO VC-195 BOARD(1/10)
TO VC-195 BOARD(2/10)
TO VC-195 BOARD(3/10)
TO VC-195 BOARD(4/10)
TO VC-195 BOARD(5/10)
TO VC-195 BOARD(6/10)
TO DD-105 BOARD CN931 (SEE PAGE 4-111)

**VC-195 BOARD (7/10)**
**CAMERA REC**

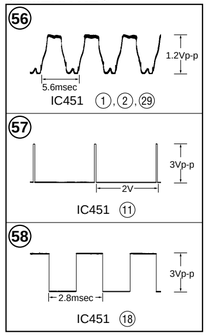

• **For schematic diagrams.**
• Refer to page 4–11 for Printed Wiring Board.

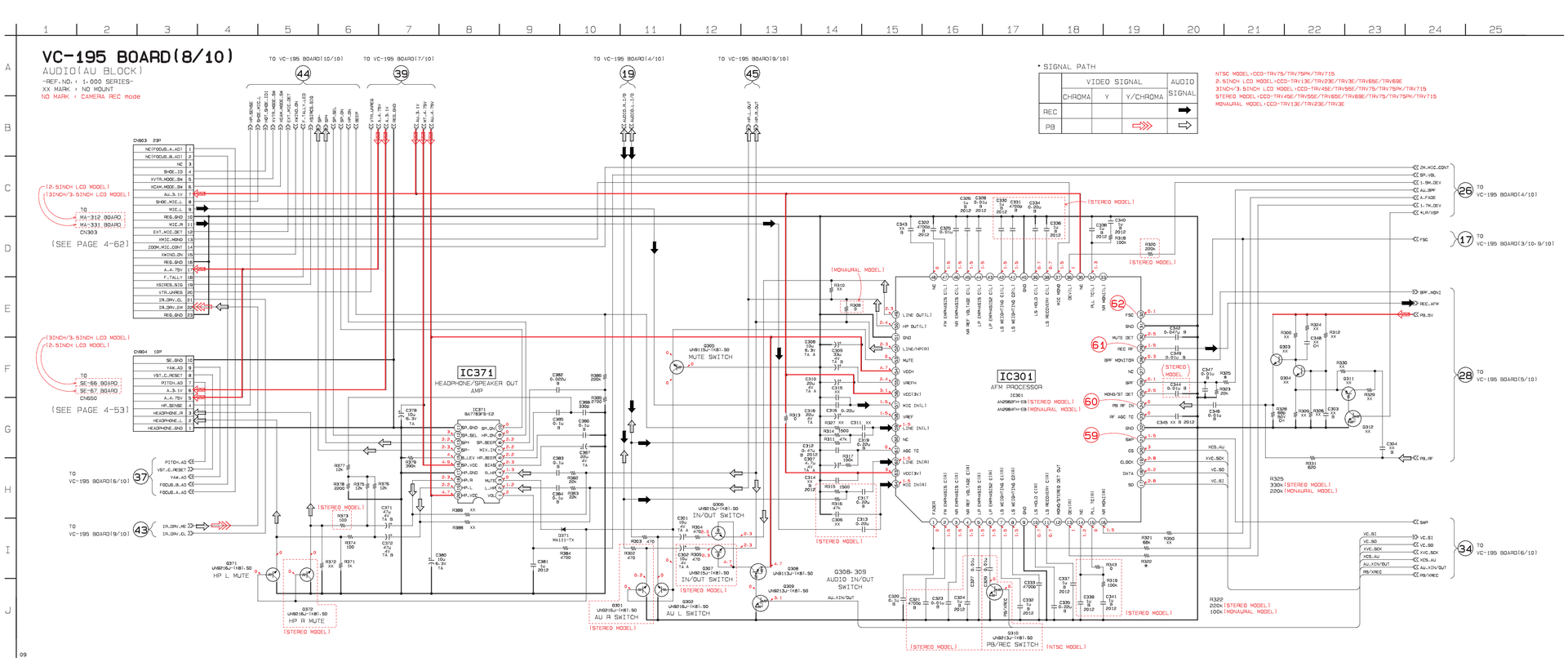


• SIGNAL PATH

| | VIDEO SIGNAL | | | AUDIO SIGNAL |
|---|---|---|---|---|
| | CHROMA | Y | Y/CHROMA | |
| REC | | | | ➡ |
| PB | | | ➡ | ⇨ |

NTSC MODEL:CCD-TRV75/TRV75PK/TRV715
2.5INCH LCD MODEL:CCD-TRV13E/TRV23E/TRV3E/TRV65E/TRV69E
3INCH/3.5INCH LCD MODEL:CCD-TRV45E/TRV55E/TRV65E/TRV75/TRV75PK/TRV715
STEREO MODEL:CCD-TRV45E/TRV55E/TRV65E/TRV69E/TRV75/TRV75PK/TRV715
MONAURAL MODEL:CCD-TRV13E/TRV23E/TRV3E

**VC-195 BOARD (8/10)**

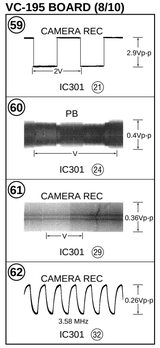

• **For schematic diagrams.**
• Refer to page 4–11 for Printed Wiring Board.

**VC-195 BOARD (9/10)**
**PB**

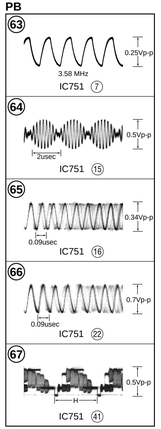


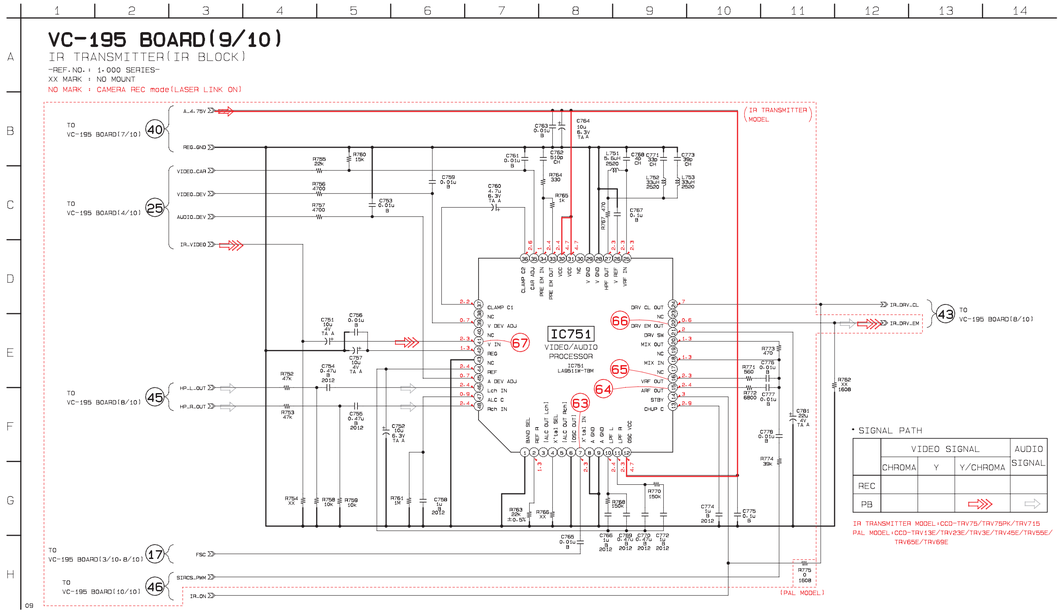


• SIGNAL PATH

| | VIDEO SIGNAL | | | AUDIO SIGNAL |
|---|---|---|---|---|
| | CHROMA | Y | Y/CHROMA | |
| REC | | | | |
| PB | | | ⇒ | ⇨ |

IR TRANSMITTER MODEL:CCD-TRV75/TRV75PK/TRV715
PAL MODEL:CCD-TRV13E/TRV23E/TRV3E/TRV45E/TRV55E/
TRV65E/TRV69E

**VC-195 BOARD (10/10)**

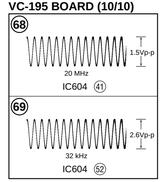

- **For schematic diagrams.**
- Refer to page 4–11 for Printed Wiring Board.
- Refer to page 4–48 for Waveforms.

# VC-195 BOARD(10/10)

## MODE CONTROL(HI BLOCK)

-REF.NO.: 1.000 SERIES-
XX MARK : NO MOUNT
NO MARK : CAMERA REC mode

IC602 INITIAL RESET BACKUP VCC

IC603 LANC IN/OUT

IC604 MODE CONTROL
IC604
S5T9212PZ-TEB [TBC+DNR&MEMORY MODEL]
S5T9213PZ-TEB [EXCEPT TBC+DNR&MEMORY MODEL]

Q607 BATTERY CHARGE DETECTOR

Q608 BUFFER

Q609 BUFFER

Q610 SWITCH

Q611 SWITCH

Q619 SWITCH

Q620 LANC ON SWITCH

[IR TRANSMITTER MODEL]

[TIME CODE MODEL]

[MONAURAL MODEL]

[STEREO MODEL]

[INTELLIGENT ACCESSORY SHOE MODEL]

INTELLIGENT ACCESSORY SHOE

FP-633 FLEXIBLE

TO VC-195 BOARD(1/10) 3
TO VC-195 BOARD(3/10) 18
TO VC-195 BOARD(4/10) 20
TO VC-195 BOARD(7/10) 42
TO VC-195 BOARD(5/10) 32
TO VC-195 BOARD(3/10.6/10) 11
TO VC-195 BOARD(6/10) 36
TO VC-195 BOARD(9/10) 46
TO VC-195 BOARD(7/10) 38
TO VC-195 BOARD(7/10) 41
TO VC-195 BOARD(B/10) 44
TO VC-195 BOARD(5/10) 30
TO VC-195 BOARD(3/10) 15

(2.5INCH LCD MODEL)
TO CF-50 BOARD CN001
(SEE PAGE 4-67)
TO CF-51 BOARD CN001
(SEE PAGE 4-70)
(3INCH/3.5INCH LCD MODEL)

TO DD-105 BOARD CN932
(SEE PAGE 4-114)

• SIGNAL PATH

| | VIDEO SIGNAL | | | AUDIO SIGNAL |
|---|---|---|---|---|
| | CHROMA | Y | Y/CHROMA | |
| REC | ▶ | ▶ | | ▶ |
| PB | ▷ | ▷ | | ▷ |

2.5INCH LCD MODEL:CCD-TRV13E/TRV23E/TRV3E/TRV65E/TRV69E
3INCH/3.5INCH LCD MODEL:CCD-TRV45E/TRV55E/TRV75/TRV75PK/TRV715
STEREO MODEL:EXCEPT CCD-TRV13E/TRV23E/TRV3E
MONAURAL MODEL:CCD-TRV13E/TRV23E/TRV3E
IR TRANSMITTER MODEL:CCD-TRV75/TRV75PK/TRV715
INTELLIGENT ACCESSORY SHOE MODEL:CCD-TRV45E/TRV55E/TRV65E/TRV69E/TRV69E/TRV75/TRV75PK/TRV715
TIME CODE MODEL:CCD-TRV69E

## SE-66/67 (STEADY SHOT) (2.5 INCH LCD, 3 INCH/3.5 INCH LCD MODEL) PRINTED WIRING BOARD

– Ref No. SE-66 BOARD: 4,000 series, SE-67 BOARD: 9,000 series –

### SE-67 BOARD (SIDE B)
### SE-66 BOARD (SIDE B)

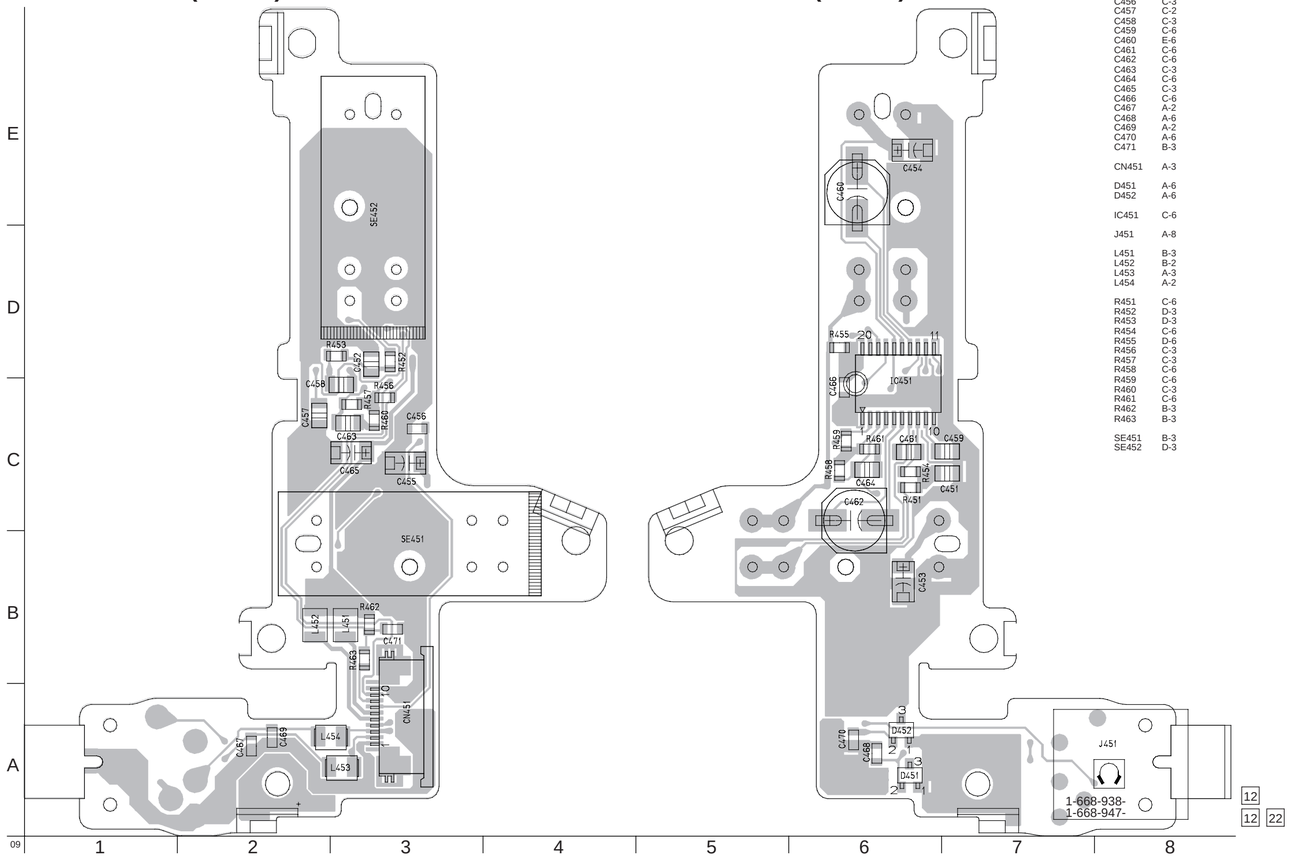


### SE-67 BOARD (SIDE A)
### SE-66 BOARD (SIDE A)




SE-66
SE-67 BOARD

| | |
|---|---|
| C451 | C-6 |
| C452 | D-3 |
| C453 | B-6 |
| C454 | E-6 |
| C455 | C-3 |
| C456 | C-3 |
| C457 | C-2 |
| C458 | C-3 |
| C459 | C-6 |
| C460 | E-6 |
| C461 | C-6 |
| C462 | C-6 |
| C463 | C-3 |
| C464 | C-6 |
| C465 | C-3 |
| C466 | C-6 |
| C467 | A-2 |
| C468 | A-6 |
| C469 | A-2 |
| C470 | A-6 |
| C471 | B-3 |
| CN451 | A-3 |
| D451 | A-6 |
| D452 | A-6 |
| IC451 | C-6 |
| J451 | A-8 |
| L451 | B-3 |
| L452 | B-2 |
| L453 | A-3 |
| L454 | A-2 |
| R451 | C-6 |
| R452 | D-3 |
| R453 | D-3 |
| R454 | C-6 |
| R455 | D-6 |
| R456 | C-3 |
| R457 | C-3 |
| R458 | C-6 |
| R459 | C-6 |
| R460 | C-3 |
| R461 | C-6 |
| R462 | B-3 |
| R463 | B-3 |
| SE451 | B-3 |
| SE452 | D-3 |

• **For Printed Wiring Boards.**

There are few cases that the part isn't mounted in this model is printed on this diagram.

• Chip diode

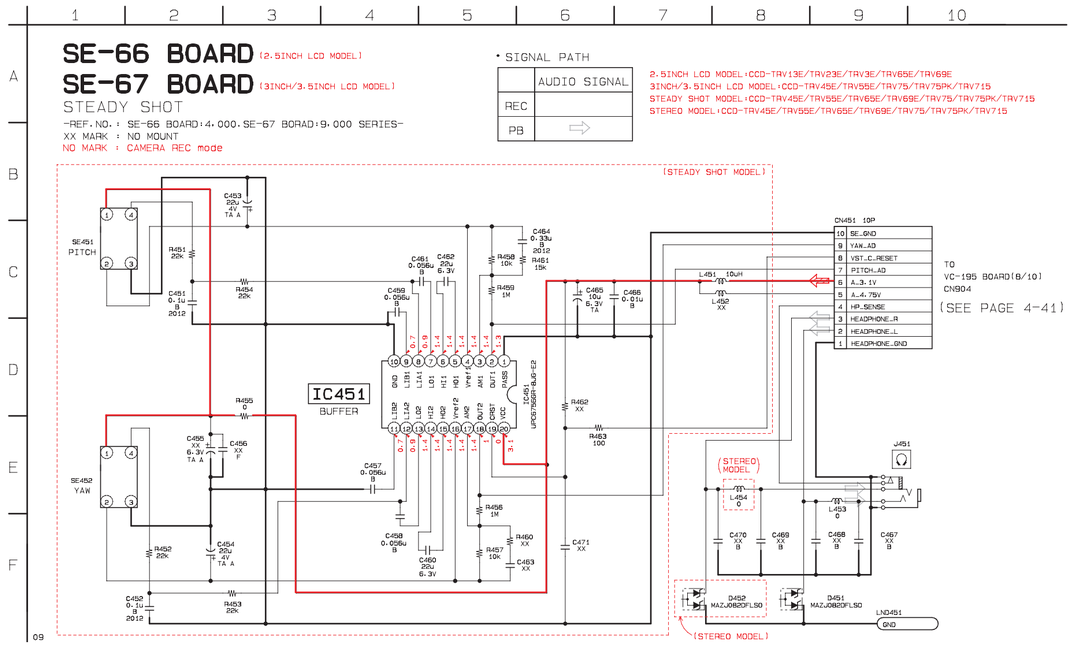


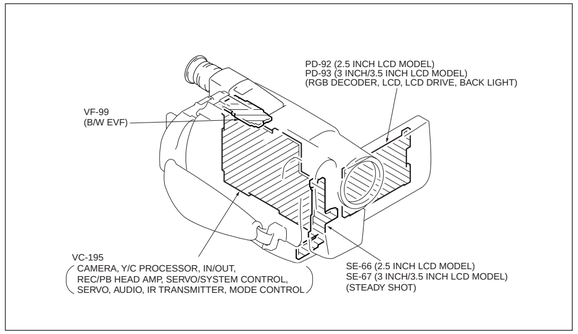
PD-92 (2.5 INCH LCD MODEL)
PD-93 (3 INCH/3.5 INCH LCD MODEL)
(RGB DECODER, LCD, LCD DRIVE, BACK LIGHT)
VF-99
(B/W EVF)
VC-195
CAMERA, Y/C PROCESSOR, IN/OUT,
REC/PB HEAD AMP, SERVO/SYSTEM CONTROL,
SERVO, AUDIO, IR TRANSMITTER, MODE CONTROL
SE-66 (2.5 INCH LCD MODEL)
SE-67 (3 INCH/3.5 INCH LCD MODEL)
(STEADY SHOT)

## PJ-83/84 (AV IN/OUT) (2.5 INCH LCD, 3 INCH/3.5 INCH LCD MODEL) PRINTED WIRING BOARD

– Ref No. PJ-83 BOARD: 4,000 series, PJ-84 BOARD: 9,000 series –

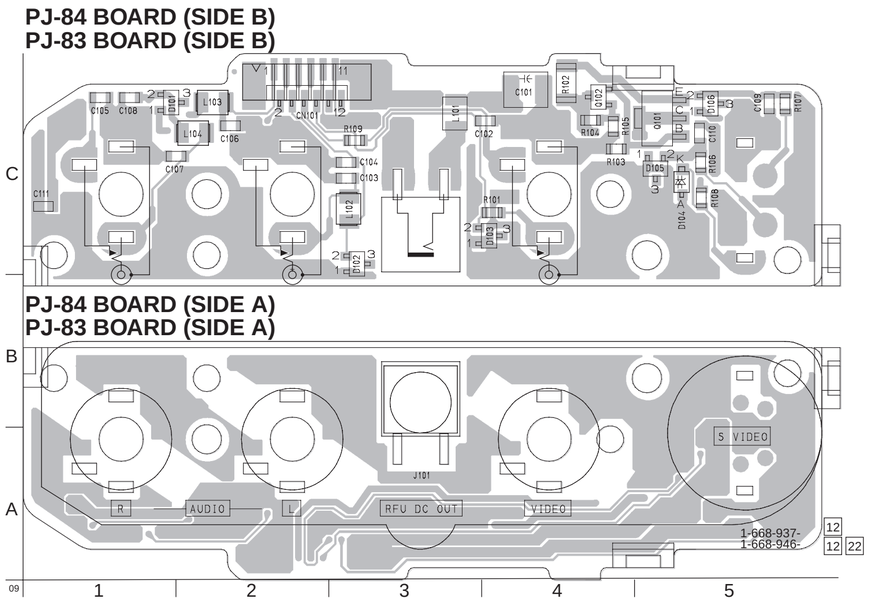


PJ-83
PJ-84 BOARD

| | |
|---|---|
| C101 | C-4 |
| C102 | C-4 |
| C103 | C-3 |
| C104 | C-3 |
| C105 | C-1 |
| C106 | C-2 |
| C107 | C-1 |
| C108 | C-1 |
| C109 | C-5 |
| C110 | C-5 |
| C111 | C-1 |
| CN101 | C-2 |
| D101 | C-1 |
| D102 | C-3 |
| D103 | C-4 |
| D105 | C-5 |
| D106 | C-5 |
| D107 | C-5 |
| J101 | A-3 |
| L101 | C-3 |
| L102 | C-3 |
| L103 | C-2 |
| L104 | C-2 |
| Q101 | C-5 |
| Q102 | C-4 |
| R101 | C-4 |
| R102 | C-4 |
| R103 | C-4 |
| R104 | C-4 |
| R105 | C-4 |
| R106 | C-5 |
| R107 | C-5 |
| R108 | C-5 |
| R109 | C-3 |

**• For Printed Wiring Boards.**

There are few cases that the part isn't mounted in this model is printed on this diagram.

• Chip diode

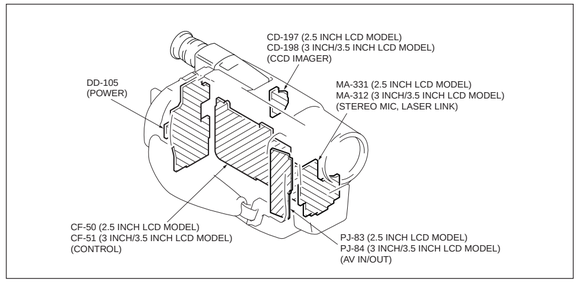




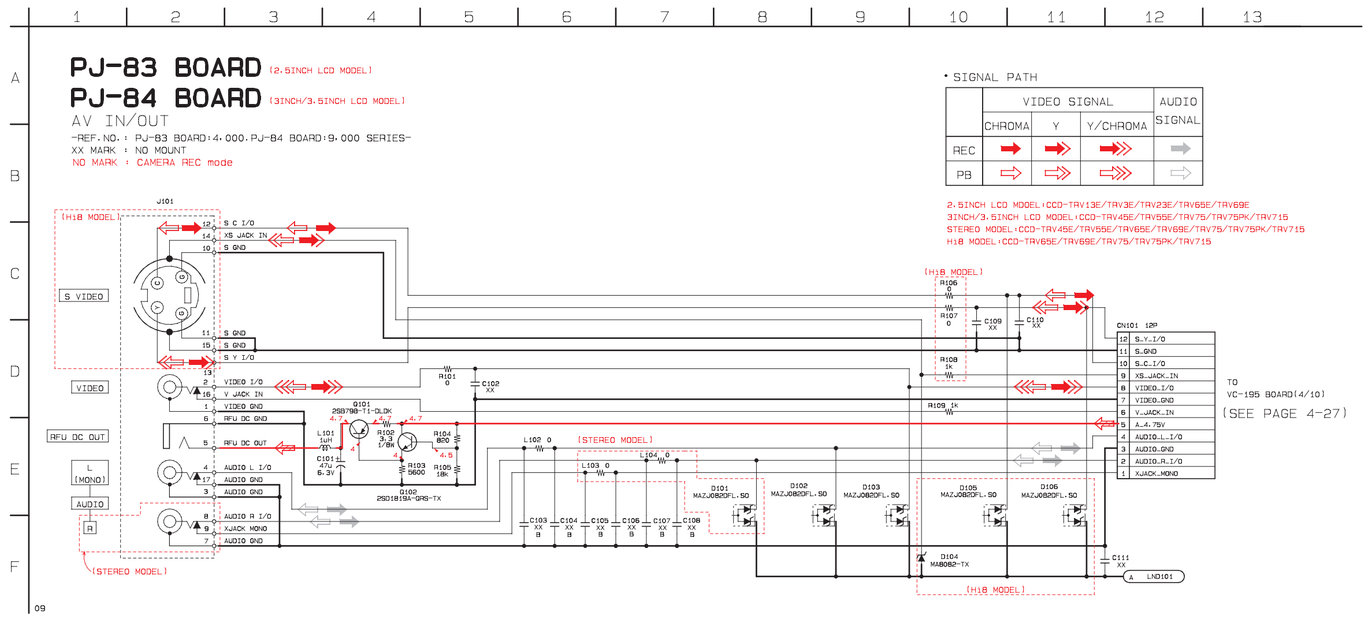

## MA-331 (STEREO MIC, LASER LINK) (2.5 INCH LCD MODEL) PRINTED WIRING BOARDS

– Ref No. MA-331 BOARD: 4,000 series –

### MA-331 BOARD (SIDE B)

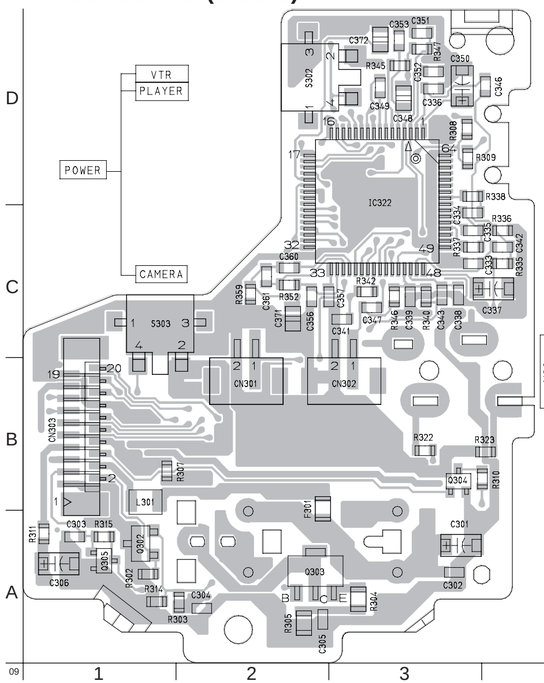


### MA-331 BOARD (SIDE A)

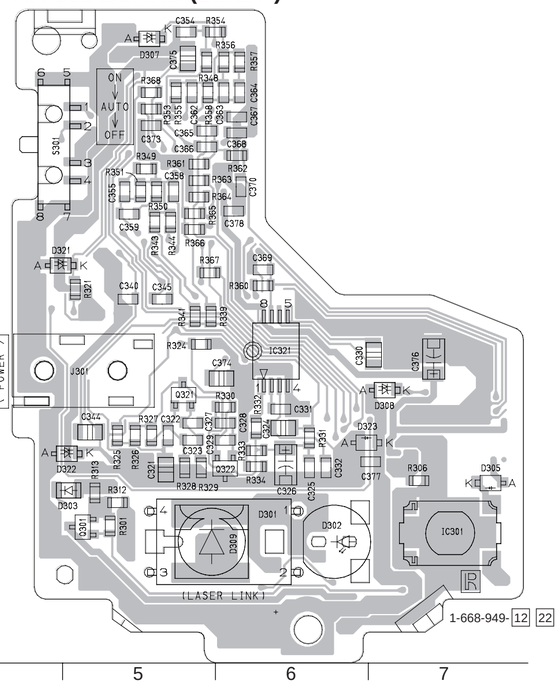


MA-331 BOARD

| | | | | | | | | | | | |
|---|---|---|---|---|---|---|---|---|---|---|---|
| C301 | A-3 | C344 | B-5 | C373 | D-5 | Q301 | A-5 | R327 | B-5 | R356 | D-6 |
| C302 | A-3 | C345 | C-5 | C374 | B-6 | Q302 | A-1 | R328 | B-5 | R357 | D-6 |
| C303 | A-1 | C346 | D-4 | C375 | D-5 | Q303 | A-2 | R329 | B-5 | R358 | D-5 |
| C304 | A-2 | C347 | C-3 | C376 | B-7 | Q304 | B-3 | R330 | B-6 | R359 | C-2 |
| C305 | A-2 | C348 | D-3 | C377 | B-6 | Q305 | A-1 | R331 | B-6 | R360 | C-6 |
| C306 | A-1 | C349 | D-3 | C378 | C-6 | Q321 | B-5 | R332 | B-6 | R361 | D-5 |
| C321 | B-5 | C350 | D-3 | | | Q322 | B-6 | R333 | B-6 | R362 | D-6 |
| C322 | B-5 | C351 | D-3 | CN301 | B-2 | | | R334 | B-6 | R363 | D-5 |
| C323 | B-5 | C352 | D-3 | CN302 | B-3 | R301 | A-5 | R335 | C-4 | R364 | D-5 |
| C324 | B-6 | C353 | D-3 | CN303 | B-1 | R302 | A-1 | R336 | C-4 | R365 | C-5 |
| C325 | B-6 | C354 | D-5 | | | R303 | A-2 | R337 | C-3 | R366 | C-5 |
| C326 | B-6 | C355 | D-5 | D301 | A-6 | R304 | A-3 | R338 | D-3 | R367 | C-5 |
| C327 | B-5 | C356 | C-2 | D302 | A-6 | R305 | A-2 | R339 | C-5 | R368 | D-5 |
| C328 | B-6 | C357 | C-2 | D303 | B-5 | R306 | B-7 | R340 | C-3 | | |
| C329 | B-6 | C358 | D-5 | D305 | B-7 | R307 | B-1 | R341 | C-5 | S301 | D-4 |
| C330 | C-7 | C359 | C-5 | D307 | D-5 | R308 | D-3 | R342 | C-3 | S302 | D-2 |
| C331 | B-6 | C360 | C-2 | D308 | B-7 | R309 | D-3 | R343 | C-5 | S303 | C-1 |
| C332 | B-6 | C361 | C-2 | D309 | A-5 | R310 | B-3 | R344 | C-5 | | |
| C333 | C-3 | C362 | D-5 | D322 | B-5 | R311 | A-1 | R345 | D-3 | | |
| C334 | C-3 | C363 | D-6 | D323 | B-6 | R312 | B-5 | R346 | C-3 | | |
| C335 | C-3 | C364 | D-6 | | | R313 | B-5 | R347 | D-3 | | |
| C336 | D-3 | C365 | D-5 | IC301 | A-7 | R314 | A-1 | R348 | D-5 | | |
| C337 | C-4 | C366 | D-5 | IC321 | C-6 | R315 | A-1 | R349 | D-5 | | |
| C338 | C-3 | C367 | D-6 | IC322 | D-3 | R321 | C-5 | R350 | D-5 | | |
| C339 | C-3 | C368 | D-6 | | | R322 | B-3 | R351 | D-5 | | |
| C340 | C-5 | C369 | C-6 | J310 | B-5 | R323 | A-4 | R352 | C-2 | | |
| C341 | C-3 | C370 | D-6 | | | R324 | C-5 | R353 | D-5 | | |
| C342 | C-4 | C371 | C-2 | L301 | B-1 | R325 | B-5 | R354 | D-5 | | |
| C343 | C-3 | C372 | D-3 | | | R326 | B-5 | R355 | D-5 | | |

- **For Printed Wiring Boards.**

There are few cases that the part isn't mounted in this model is printed on this diagram.

- Chip transistor

## MA-312 (STEREO MIC, LASER LINK) (3 INCH/3.5 INCH LCD MODEL) PRINTED WIRING BOARD

– Ref No. MA-312 BOARD: 9,000 series –

### MA-312 BOARD (SIDE B)

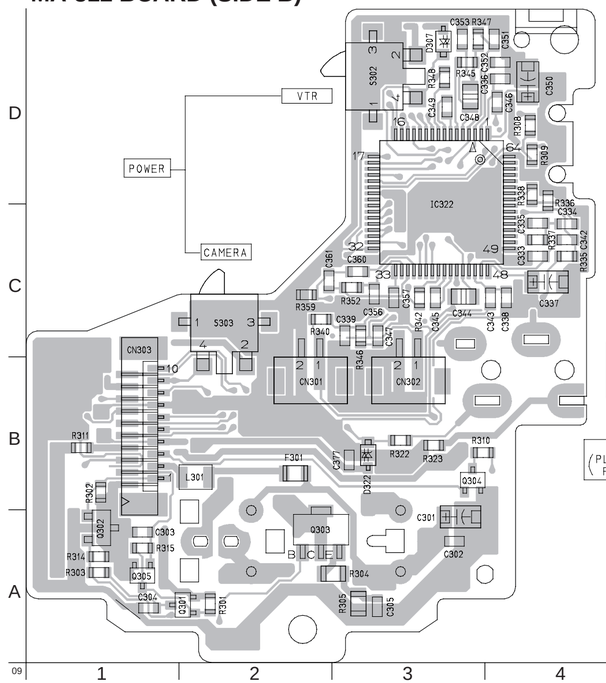


### MA-312 BOARD (SIDE A)

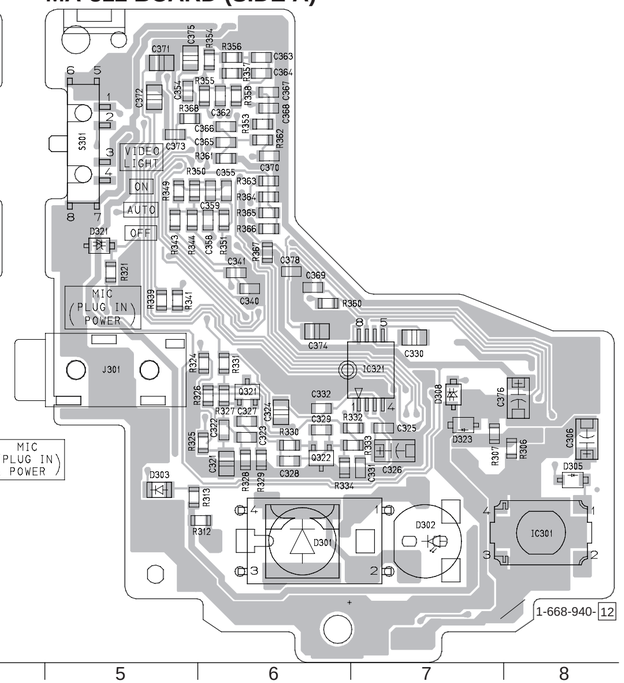


MA-312 BOARD

| | | | | | | | | | | | |
|---|---|---|---|---|---|---|---|---|---|---|---|
| C301 | A-3 | C345 | C-3 | C375 | D-5 | Q302 | A-1 | R329 | B-6 | R359 | C-2 |
| C302 | A-3 | C346 | D-4 | C376 | B-8 | Q303 | A-2 | R330 | B-6 | R360 | C-6 |
| C303 | A-1 | C347 | C-3 | C377 | B-3 | Q304 | B-3 | R331 | B-6 | R361 | D-6 |
| C304 | A-1 | C348 | D-3 | C378 | C-6 | Q305 | A-1 | R332 | B-7 | R362 | D-6 |
| C305 | A-3 | C349 | D-3 | | | Q321 | B-6 | R333 | B-7 | R363 | D-6 |
| C306 | B-8 | C350 | D-4 | CN301 | B-2 | Q322 | B-6 | R334 | B-6 | R364 | D-6 |
| C321 | B-6 | C351 | D-4 | CN302 | B-3 | | | R335 | C-4 | R365 | C-6 |
| C322 | B-6 | C352 | D-4 | CN303 | B-1 | R301 | A-2 | R336 | D-4 | R366 | C-6 |
| C323 | B-6 | C353 | D-3 | | | R302 | B-1 | R337 | C-4 | R367 | C-6 |
| C324 | B-6 | C354 | D-5 | D301 | A-6 | R303 | A-1 | R338 | D-4 | R368 | D-5 |
| C325 | B-7 | C355 | D-6 | D302 | A-7 | R304 | A-3 | R339 | C-5 | | |
| C326 | B-7 | C356 | C-3 | D303 | B-5 | R305 | A-3 | R340 | C-2 | S301 | D-5 |
| C327 | B-6 | C357 | C-3 | D305 | B-8 | R306 | B-8 | R341 | C-5 | S302 | D-3 |
| C328 | B-6 | C358 | C-6 | D307 | D-3 | R307 | B-7 | R342 | C-3 | S303 | C-2 |
| C329 | B-6 | C359 | D-6 | D308 | B-7 | R308 | D-4 | R343 | C-5 | | |
| C330 | C-7 | C360 | C-3 | D321 | C-5 | R309 | D-4 | R344 | C-5 | | |
| C331 | B-7 | C361 | C-2 | D322 | B-3 | R310 | B-3 | R345 | D-3 | | |
| C332 | B-6 | C362 | D-6 | D323 | B-7 | R311 | B-1 | R346 | C-3 | | |
| C333 | C-4 | C363 | D-6 | | | R312 | A-6 | R347 | D-3 | | |
| C334 | C-4 | C364 | D-6 | F301 | B-2 | R313 | B-6 | R348 | D-3 | | |
| C335 | C-4 | C365 | D-6 | | | R314 | A-1 | R349 | D-5 | | |
| C336 | D-4 | C366 | D-6 | IC301 | A-8 | R315 | A-1 | R350 | D-5 | | |
| C337 | C-4 | C367 | D-6 | IC321 | B-7 | R321 | C-5 | R351 | C-6 | | |
| C338 | C-4 | C368 | D-6 | IC332 | C-3 | R322 | B-3 | R351 | D-6 | | |
| C339 | C-3 | C369 | C-6 | | | R323 | B-3 | R352 | C-3 | | |
| C340 | C-6 | C370 | D-6 | J301 | B-5 | R324 | B-6 | R353 | D-6 | | |
| C341 | C-6 | C371 | D-5 | | | R325 | B-6 | R354 | D-6 | | |
| C342 | C-4 | C372 | D-5 | L301 | B-2 | R326 | B-6 | R355 | D-6 | | |
| C343 | C-4 | C373 | D-5 | | | R327 | B-6 | R356 | D-6 | | |
| C344 | C-3 | C374 | C-6 | Q301 | A-2 | R328 | B-6 | R358 | D-6 | | |

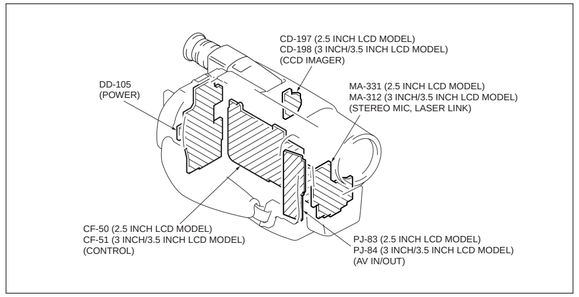

# MA-312 BOARD (3INCH/3.5INCH LCD MODEL)
# MA-331 BOARD (2.5INCH LCD MODEL)

STEREO MIC, LASER LINK

-REF.NO. : MA-312 BOARD:9.000
MA-331 BOARD:4.000 SERIES-
NO MARK : CAMERA REC mode
( ) : LASER LINK ON

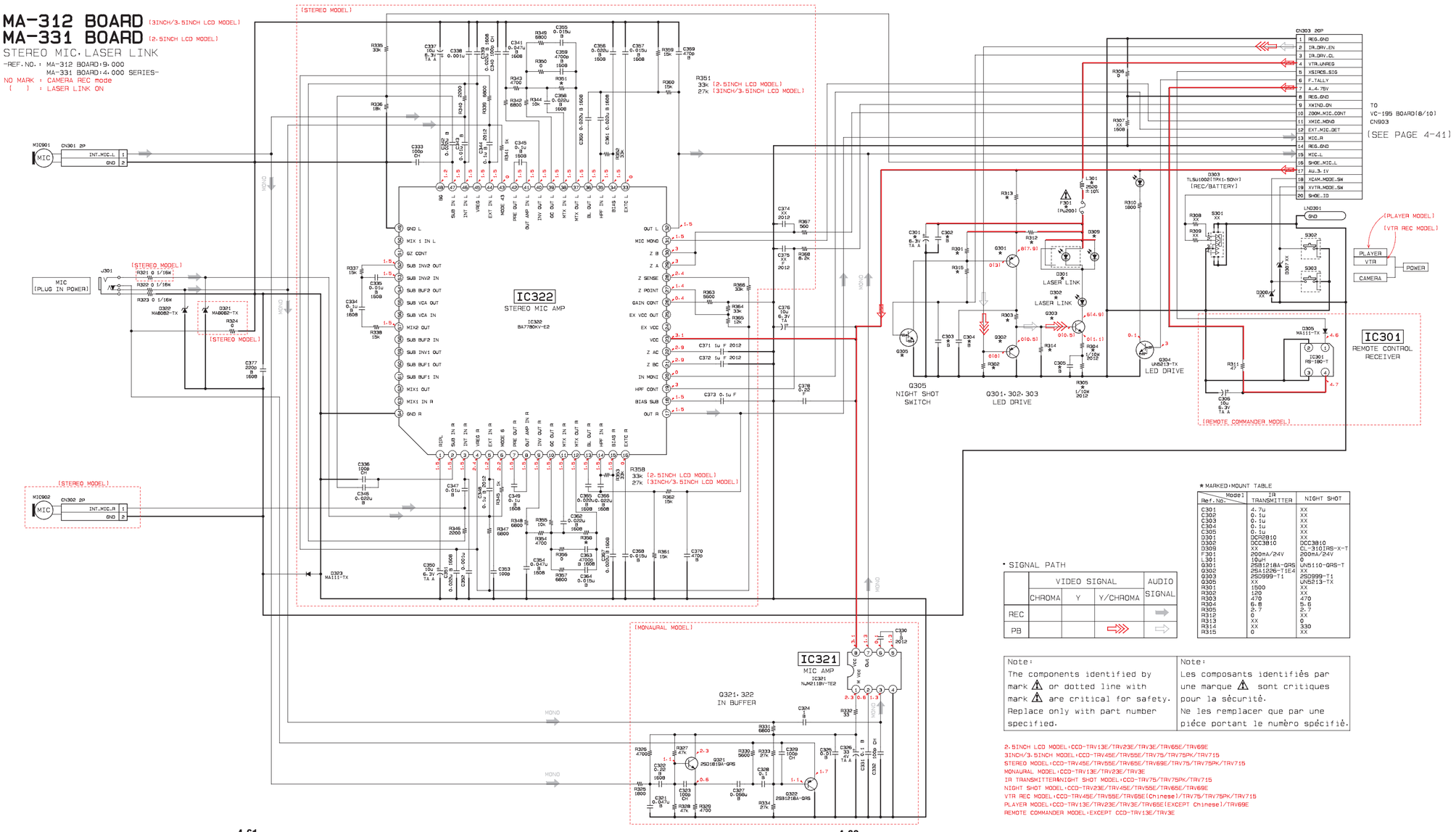


★MARKED:MOUNT TABLE

| Ref.No. \ Model | IR TRANSMITTER | NIGHT SHOT |
|---|---|---|
| C301 | 4.7u | XX |
| C302 | 0.1u | XX |
| C303 | 0.1u | XX |
| C304 | 0.1u | XX |
| C305 | 0.1u | XX |
| D301 | DC2S2810 | XX |
| D302 | DCC3B10 | DCC3B10 |
| D309 | XX | CC-3101RS-X-T |
| F301 | 200mA/24V | 200mA/24V |
| L301 | 10uH | 0 |
| Q301 | 2SB1218A-QRS | UN5110-QRS-T |
| Q302 | 2SA1226-T1E4 | XX |
| Q303 | 2SD999-T1 | 2SD999-T1 |
| Q305 | XX | UN5213-TX |
| R301 | 1500 | XX |
| R302 | 120 | XX |
| R303 | 470 | 470 |
| R304 | 6.8 | 5.6 |
| R305 | 2.7 | 2.7 |
| R312 | 0 | XX |
| R313 | XX | 0 |
| R314 | XX | 330 |
| R315 | 0 | XX |

• SIGNAL PATH

| | VIDEO SIGNAL | | | AUDIO SIGNAL |
|---|---|---|---|---|
| | CHROMA | Y | Y/CHROMA | |
| REC | | | | |
| PB | | | | |

Note:
The components identified by mark ⚠ or dotted line with mark ⚠ are critical for safety. Replace only with part number specified.

Note:
Les composants identifiés par une marque ⚠ sont critiques pour la sécurité. Ne les remplacer que par une pièce portant le numéro spécifié.

2.5INCH LCD MODEL:CCD-TRV13E/TRV23E/TRV3E/TRV65E/TRV69E
3INCH/3.5INCH MODEL:CCD-TRV45E/TRV55E/TRV75/TRV75PK/TRV715
STEREO MODEL:CCD-TRV45E/TRV55E/TRV65E/TRV69E/TRV75/TRV75PK/TRV715
MONAURAL MODEL:CCD-TRV13E/TRV23E/TRV3E
IR TRANSMITTER/NIGHT SHOT MODEL:CCD-TRV75/TRV75PK/TRV715
NIGHT SHOT MODEL:CCD-TRV23E/TRV45E/TRV55E/TRV65E/TRV69E
VTR REC MODEL:CCD-TRV45E/TRV55E/TRV65E(Chinese)/TRV75/TRV75PK/TRV715
PLAYER MODEL:CCD-TRV13E/TRV23E/TRV3E/TRV65E(EXCEPT Chinese)/TRV69E
REMOTE COMMANDER MODEL:EXCEPT CCD-TRV13E/TRV3E

## CF-50 (CONTROL (2.5 INCH LCD MODEL)) PRINTED WIRING BOARD

– Ref No. CF-50 BOARD: 4,000 series –

CF-50 BOARD

BH001 B-10

C001 B-6
C002 B-6

CN001 D-3
CN002 A-5
CN003 D-6
CN005 C-7
CN006 B-7
CN007 C-5
CN008 D-5

D001 D-6
D003 D-12
D004 A-13
D005 B-7
D006 B-6
D007 A-14
D008 B-6
D009 B-1
D102 A-4

Q001 D-5
Q002 C-1
Q003 B-3
Q005 B-2

R001 B-1
R002 B-13
R003 B-3
R005 A-13
R006 C-3
R007 D-3
R008 D-3
R009 D-1
R013 A-13
R015 C-14
R016 D-12
R019 C-14
R020 C-12
R023 B-14
R025 D-1
R026 C-12
R029 C-2
R031 B-4
R032 C-11
R036 C-2
R038 B-4
R039 C-2
R041 A-4
R049 B-3
R050 B-3
R051 B-3
R052 B-3
R053 A-4

S003 D-11
S004 C-15
S006 A-13
S008 D-13
S010 B-14
S012 C-15
S013 C-13
S015 A-15
S017 D-15
S018 C-12
S021 D-12
S022 C-11
S024 D-24

### CF-50 BOARD (SIDE B)

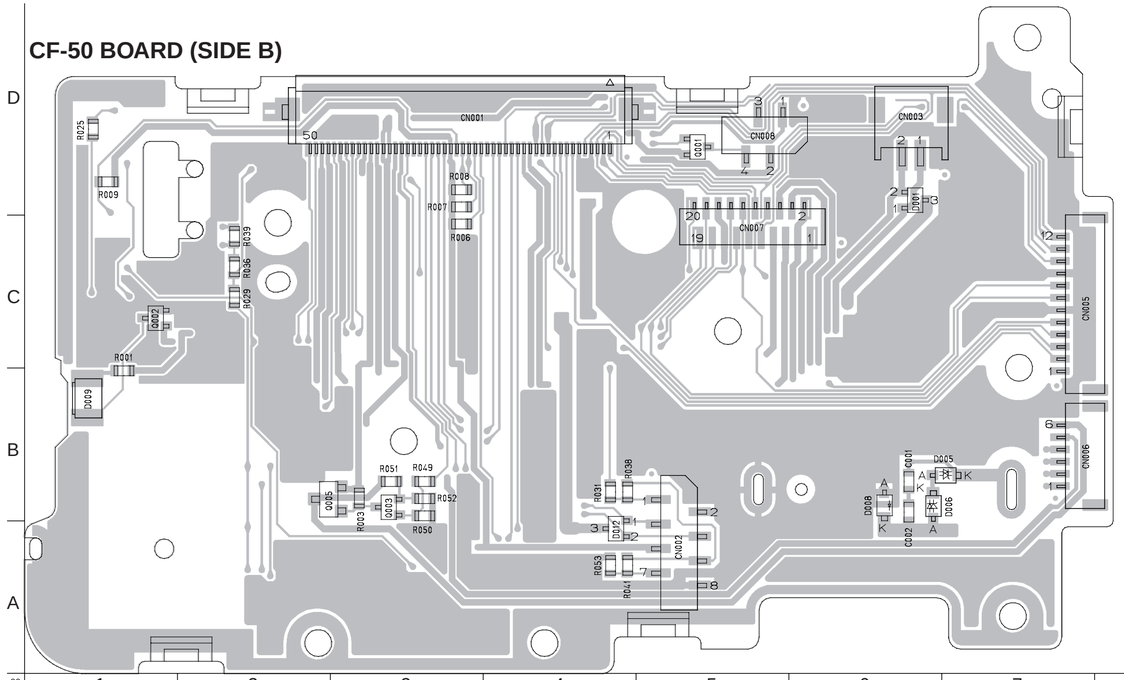


### CF-50 BOARD (SIDE A)

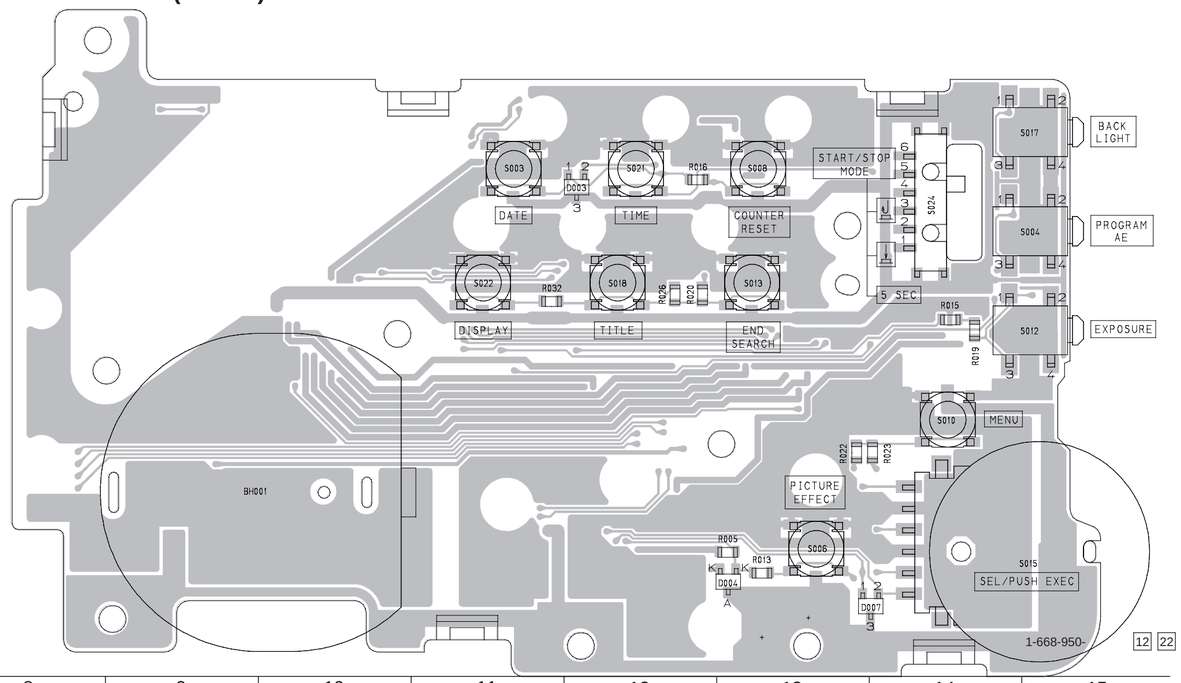


• **For Printed Wiring Boards.**

There are few cases that the part isn't mounted in this model is printed on this diagram.

• Chip transistor Chip diode

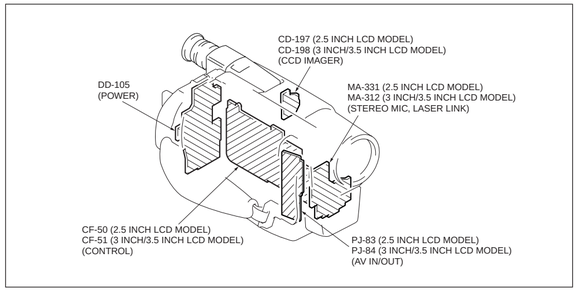

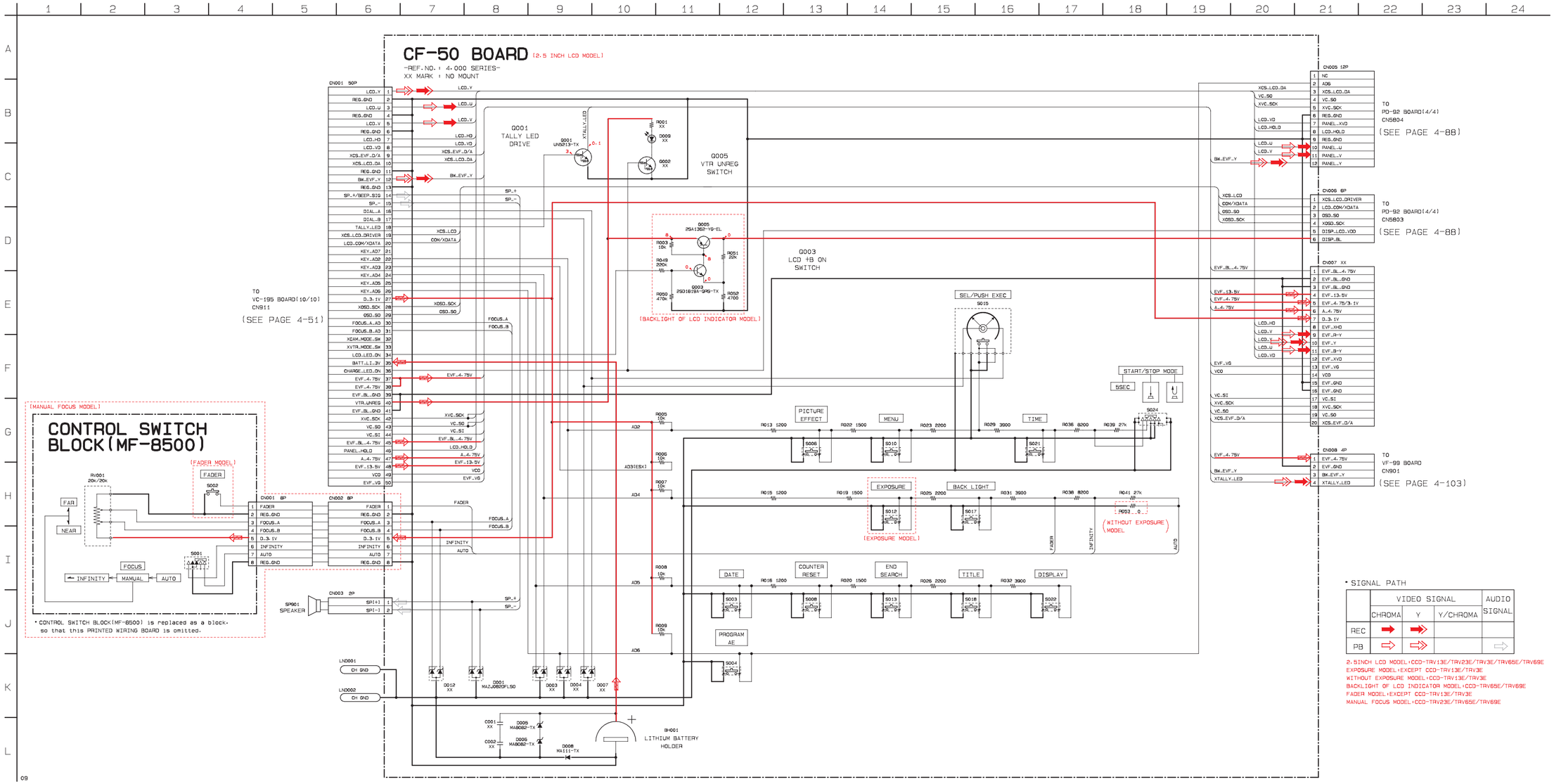


* SIGNAL PATH

| | VIDEO SIGNAL | | | AUDIO SIGNAL |
|---|---|---|---|---|
| | CHROMA | Y | Y/CHROMA | |
| REC | ➡ | ➡ | | |
| PB | ⇨ | ⇨ | | ⇨ |

2.5INCH LCD MODEL:CCD-TRV13E/TRV23E/TRV3E/TRV65E/TRV69E
EXPOSURE MODEL:EXCEPT CCD-TRV13E/TRV3E
WITHOUT EXPOSURE MODEL:CCD-TRV13E/TRV3E
BACKLIGHT OF LCD INDICATOR MODEL:CCD-TRV69E/TRV69E
FADER MODEL:EXCEPT CCD-TRV13E/TRV3E
MANUAL FOCUS MODEL:CCD-TRV23E/TRV65E/TRV69E

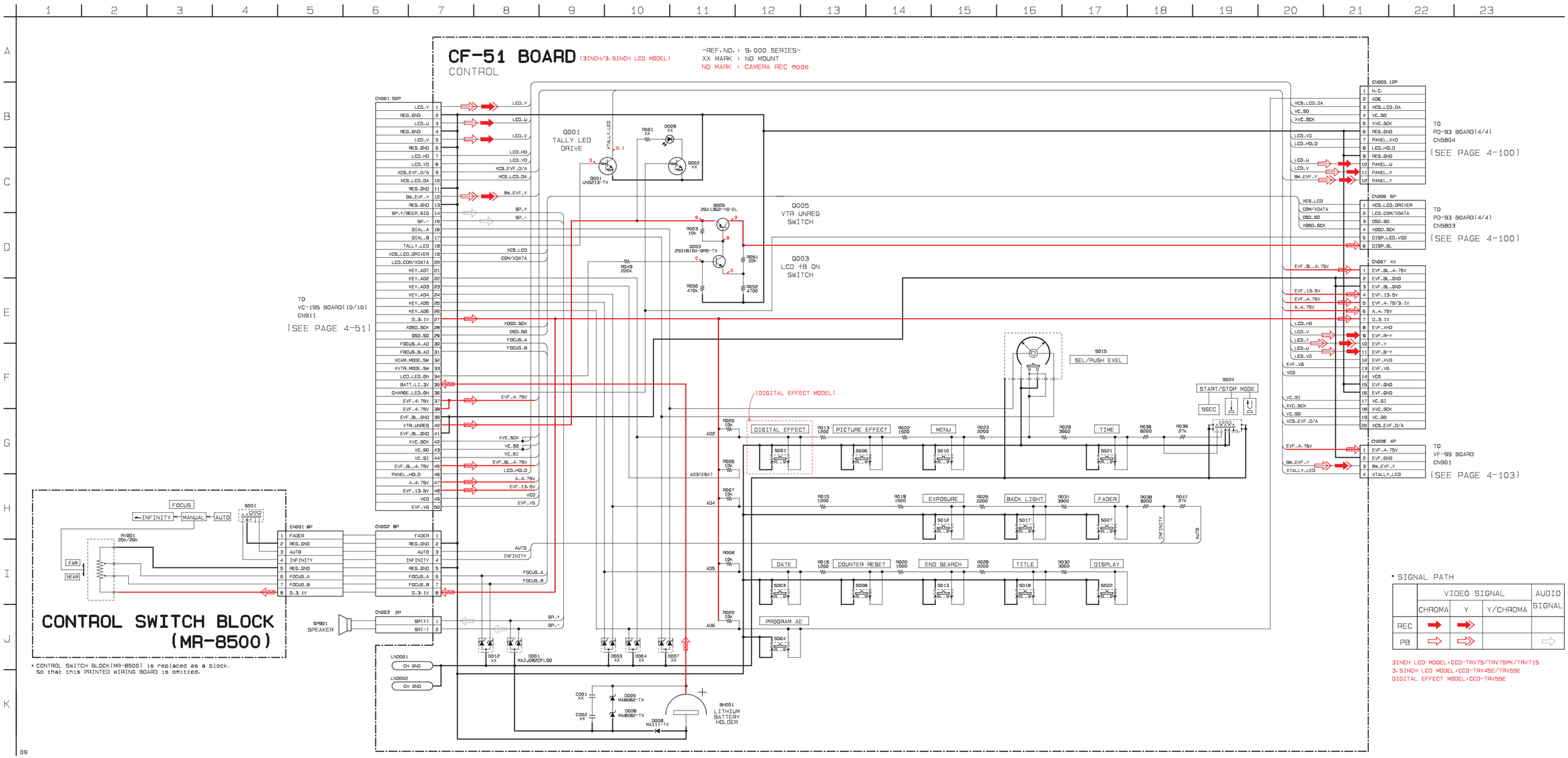
CF-51 BOARD (3INCH/3.5INCH LCD MODEL)
CONTROL
-REF.NO. : 9.000 SERIES-
XX MARK : NO MOUNT
NO MARK : CAMERA REC mode
CN001 50P
CN005 12P
CN006 6P
CN007 XX
CN008 4P
TO PD-93 BOARD(4/4) CN5804 (SEE PAGE 4-100)
TO PD-93 BOARD(4/4) CN5803 (SEE PAGE 4-100)
TO VF-99 BOARD CN901 (SEE PAGE 4-103)
TO VC-195 BOARD(10/10) CN911 (SEE PAGE 4-51)
Q001 TALLY LED DRIVE
Q002
Q003 LCD +B ON SWITCH
Q005 VTR UNREG SWITCH
(DIGITAL EFFECT MODEL)
DIGITAL EFFECT
PICTURE EFFECT
MENU
TIME
EXPOSURE
BACK LIGHT
FADER
DATE
COUNTER RESET
END SEARCH
TITLE
DISPLAY
PROGRAM AE
S015 SEL/PUSH EXEL
S024 START/STOP MODE
5SEC
CN001 8P
CN002 8P
CN003 2P
SP901 SPEAKER
LITHIUM BATTERY HOLDER
FOCUS
INFINITY
MANUAL
AUTO
FAR
NEAR
CONTROL SWITCH BLOCK (MR-8500)
• CONTROL SWITCH BLOCK(MR-8500) is replaced as a block. So that this PRINTED WIRING BOARD is omitted.
• SIGNAL PATH
VIDEO SIGNAL
CHROMA
Y
Y/CHROMA
AUDIO SIGNAL
REC
PB
3INCH LCD MODEL:CCD-TRV75/TRV75PK/TRV715
3.5INCH LCD MODEL:CCD-TRV45E/TRV55E
DIGITAL EFFECT MODEL:CCD-TRV55E

**CF-51 (CONTROL (3 INCH/3.5 INCH LCD MODEL)** **PRINTED WIRING BOARD**
– Ref No. CF-51 BOARD: 9,000 series –

## CF-51 BOARD (SIDE B)

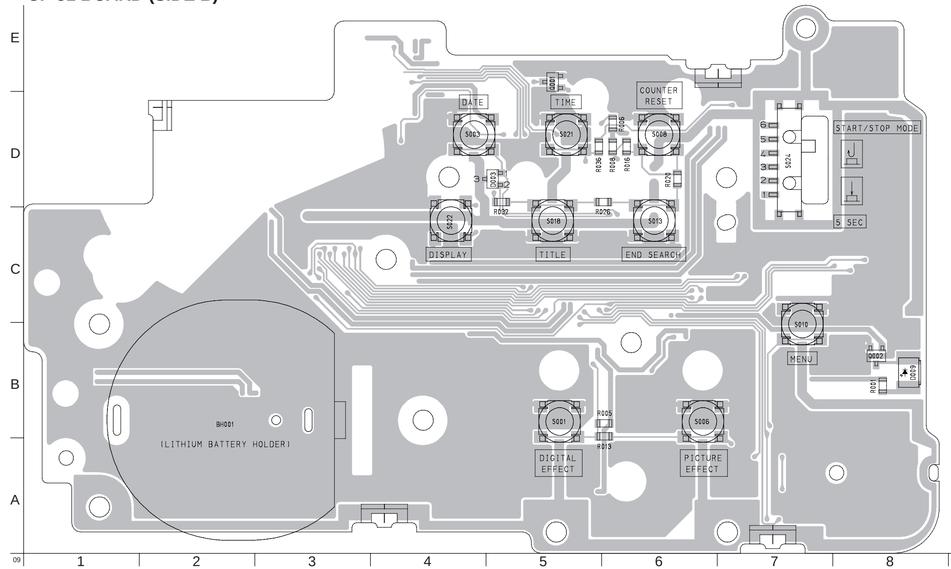


## CF-51 BOARD (SIDE A)

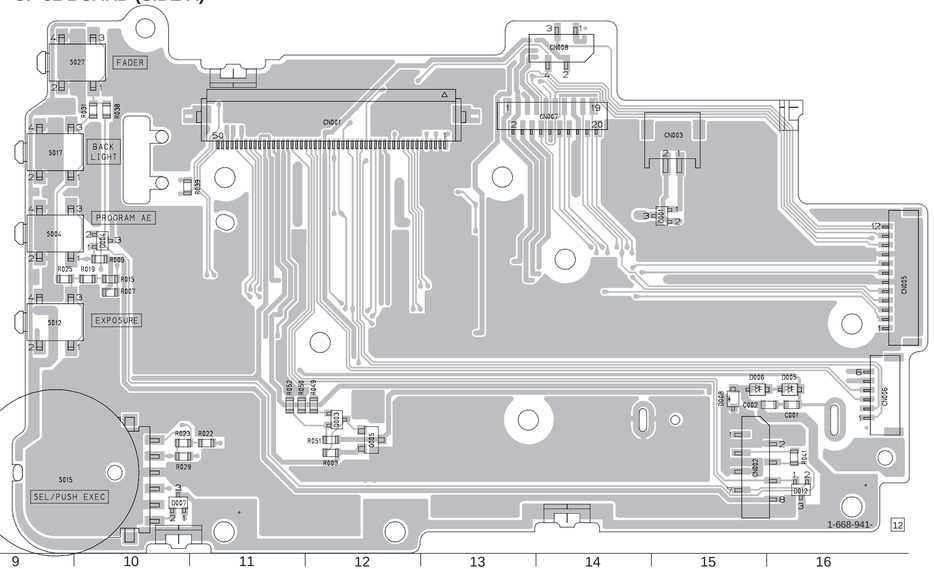


CF-51 BOARD

| | | | |
|---|---|---|---|
| BH001 | B-2 | R031 | D-10 |
| | | R038 | D-5 |
| C001 | B-16 | R038 | D-10 |
| C002 | B-15 | R039 | D-10 |
| | | R041 | A-16 |
| CN001 | D-12 | R049 | B-12 |
| CN002 | A-15 | R050 | B-11 |
| CN003 | D-15 | R051 | A-12 |
| CN005 | C-16 | R052 | B-11 |
| CN006 | B-16 | | |
| CN007 | D-14 | S001 | B-5 |
| CN008 | E-14 | S002 | C-4 |
| | | S003 | D-4 |
| D001 | C-15 | S004 | C-9 |
| D003 | D-5 | S006 | B-6 |
| D004 | C-10 | S008 | D-6 |
| D005 | B-16 | S010 | B-7 |
| D006 | B-15 | S012 | C-9 |
| D007 | A-10 | S013 | C-6 |
| D008 | B-15 | S015 | A-9 |
| D009 | B-8 | S017 | D-9 |
| D012 | A-16 | S018 | C-5 |
| | | S021 | D-5 |
| Q001 | E-5 | S024 | D-7 |
| Q002 | B-8 | S025 | C-9 |
| Q003 | B-12 | S027 | E-10 |
| Q005 | A-12 | | |
| R001 | B-8 | | |
| R003 | A-12 | | |
| R005 | B-5 | | |
| R006 | D-6 | | |
| R007 | C-10 | | |
| R008 | D-6 | | |
| R009 | C-10 | | |
| R013 | B-5 | | |
| R015 | C-10 | | |
| R018 | D-6 | | |
| R019 | C-10 | | |
| R020 | D-6 | | |
| R022 | A-11 | | |
| R023 | A-10 | | |
| R029 | A-10 | | |

• **For Printed Wiring Boards.**

There are few cases that the part isn't mounted in this model is printed on this diagram.

• Chip transistor

Chip diode

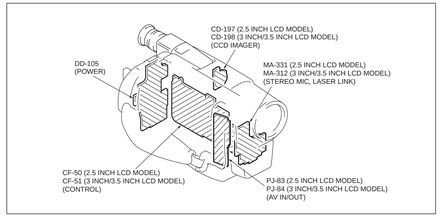


**CONTROL**
**CF-51 (3 INCH/3.5 INCH LCD MODEL)**

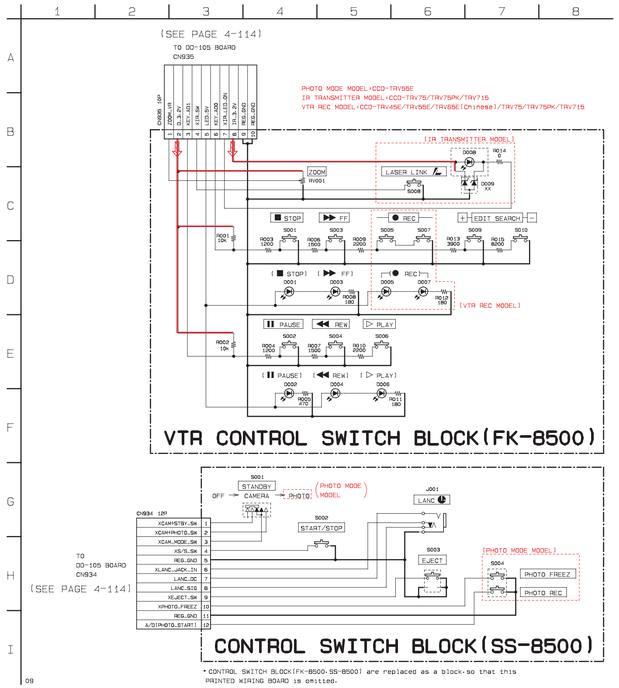


• CONTROL SWITCH BLOCK(FK-8500·SS-8500) are replaced as a block·so that this PRINTED WIRING BOARD is omitted.



## CONTROL SWITCH BLOCK, RGB DECODER, LCD DRIVE, BACK LIGHT, LCD

FK-8500, SS-8500 PD-92 (2.5 INCH LCD MODEL)

## PD-92 (RGB DECODER, LCD DRIVE, BACK LIGHT, LCD (2.5 INCH LCD MODEL)) PRINTED WIRING BOARD

– Ref No. PD-92 BOARD: 10,000 series –

PD-92 BOARD

| | | | | | | | |
|---|---|---|---|---|---|---|---|
| C5501 | B-10 | D5604 | C-10 | R5542 | D-3 | R5673 | D-1 |
| C5502 | B-10 | D5701 | C-5 | R5544 | C-2 | R5674 | D-2 |
| C5503 | C-2 | D5702 | C-5 | R5546 | C-2 | R5676 | D-1 |
| C5504 | C-10 | D5703 | D-5 | R5546 | D-2 | R5678 | D-9 |
| C5505 | C-10 | D5704 | C-7 | R5602 | C-2 | R5679 | D-2 |
| C5506 | B-2 | | | R5603 | D-8 | R5680 | D-2 |
| C5507 | C-2 | IC5501 | B-10 | R5604 | D-3 | R5681 | D-2 |
| C5508 | B-2 | IC5502 | C-2 | R5605 | C-1 | R5682 | D-1 |
| C5509 | C-3 | IC5601 | C-9 | R5606 | C-10 | R5683 | D-2 |
| C5510 | C-1 | IC5602 | C-8 | R5607 | A-2 | R5684 | D-2 |
| C5511 | C-2 | IC5701 | C-4 | R5609 | C-9 | R5685 | D-3 |
| C5512 | C-1 | IC5801 | C-4 | R5610 | B-10 | R5686 | D-3 |
| C5513 | C-1 | | | R5612 | C-9 | R5688 | C-9 |
| C5514 | C-2 | L5501 | C-3 | R5614 | C-9 | R5692 | C-9 |
| C5515 | C-2 | L5502 | A-2 | R5615 | C-9 | R5694 | B-9 |
| C5516 | C-2 | L5503 | A-2 | R5616 | B-10 | R5695 | B-9 |
| C5517 | C-1 | L5601 | A-2 | R5617 | B-9 | R5695 | D-10 |
| C5518 | C-3 | L5603 | C-9 | R5618 | C-9 | R5697 | C-10 |
| C5519 | B-2 | L5604 | A-2 | R5619 | B-9 | R5698 | B-9 |
| C5520 | C-3 | L5605 | C-9 | R5620 | B-9 | R5698 | D-9 |
| C5601 | A-2 | L5701 | C-7 | R5621 | C-9 | R5701 | C-5 |
| C5602 | A-2 | | | R5622 | B-8 | R5702 | C-5 |
| C5603 | B-10 | Q5501 | C-2 | R5623 | B-8 | R5703 | C-4 |
| C5604 | C-9 | Q5601 | B-9 | R5624 | B-9 | R5704 | C-4 |
| C5605 | C-9 | Q5602 | B-9 | R5625 | C-10 | R5705 | C-4 |
| C5607 | B-9 | Q5603 | B-10 | R5626 | C-9 | R5706 | C-4 |
| C5608 | C-9 | Q5604 | C-10 | R5627 | C-10 | R5707 | C-7 |
| C5609 | B-10 | Q5605 | C-8 | R5628 | C-10 | R5708 | D-4 |
| C5610 | C-9 | Q5606 | C-9 | R5629 | B-9 | R5709 | D-7 |
| C5611 | B-8 | Q5607 | C-9 | R5630 | B-9 | R5710 | D-4 |
| C5612 | C-10 | Q5608 | B-8 | R5631 | C-9 | R5801 | C-1 |
| C5613 | B-8 | Q5609 | B-9 | R5632 | B-9 | R5802 | C-1 |
| C5614 | C-10 | Q5701 | C-3 | R5634 | B-9 | R5803 | A-1 |
| C5615 | C-10 | Q5702 | C-4 | R5635 | C-10 | R5804 | A-1 |
| C5616 | C-9 | | | R5636 | B-10 | R5805 | C-6 |
| C5618 | D-9 | R5501 | B-2 | R5637 | C-10 | R5806 | A-1 |
| C5619 | D-2 | R5502 | B-2 | R5638 | C-10 | R5807 | B-7 |
| C5620 | D-10 | R5504 | B-2 | R5639 | C-1 | R5808 | B-9 |
| C5622 | C-10 | R5505 | B-2 | R5640 | C-3 | R5809 | C-7 |
| C5623 | C-2 | R5506 | B-2 | R5641 | C-3 | R5810 | B-9 |
| C5624 | B-3 | R5507 | B-2 | R5642 | C-10 | R5811 | C-4 |
| C5625 | B-2 | R5508 | B-1 | R5644 | C-9 | R5812 | C-4 |
| C5633 | B-9 | R5508 | B-2 | R5645 | C-10 | | |
| C5634 | B-9 | R5509 | B-1 | R5646 | C-10 | S5801 | D-1 |
| C5701 | C-8 | R5510 | B-3 | R5647 | D-2 | S5802 | C-1 |
| C5702 | C-8 | R5511 | B-3 | R5648 | C-3 | S5803 | B-1 |
| C5703 | C-3 | R5512 | B-1 | R5648 | D-10 | S5804 | A-1 |
| C5704 | C-7 | R5513 | B-2 | R5651 | D-2 | | |
| C5705 | C-6 | R5516 | B-2 | R5652 | D-2 | T5701 | C-4 |
| C5706 | C-4 | R5517 | B-1 | R5653 | D-9 | | |
| C5801 | C-4 | R5518 | B-1 | R5654 | D-9 | | |
| C5821 | C-1 | R5519 | B-1 | R5657 | C-9 | | |
| | | R5520 | C-3 | R5658 | D-9 | | |
| CN5501 | D-9 | R5521 | B-2 | R5659 | D-10 | | |
| CN5601 | D-10 | R5522 | B-2 | R5660 | D-10 | | |
| CN5701 | D-6 | R5523 | C-3 | R5661 | D-10 | | |
| CN5801 | C-8 | R5526 | C-1 | R5663 | C-9 | | |
| CN5802 | C-7 | R5527 | B-1 | R5664 | D-10 | | |
| CN5803 | C-8 | R5528 | C-3 | R5665 | D-1 | | |
| CN5804 | C-10 | R5529 | C-1 | R5665 | D-10 | | |
| CN5805 | C-6 | R5530 | B-1 | R5667 | D-1 | | |
| | | R5531 | C-2 | R5668 | D-1 | | |
| D5601 | B-10 | R5532 | C-3 | R5669 | D-1 | | |
| D5602 | B-9 | R5533 | B-1 | R5670 | D-1 | | |
| D5603 | B-10 | R5537 | D-8 | R5671 | D-9 | | |
| D5605 | B-9 | R5541 | D-2 | R5672 | D-9 | | |



## PD-92 BOARD (SIDE B)

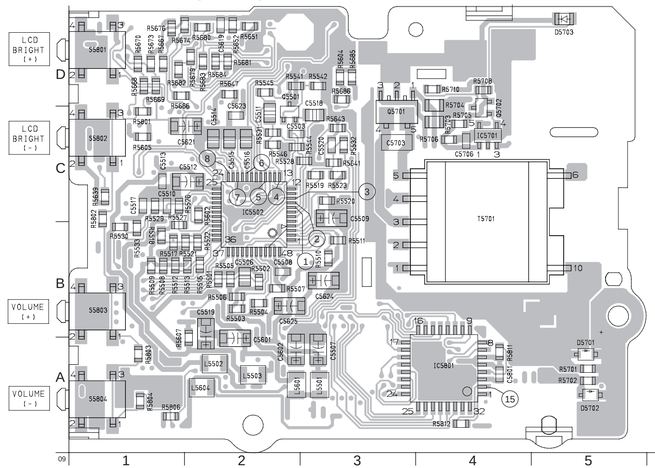


## PD-92 BOARD (SIDE A)

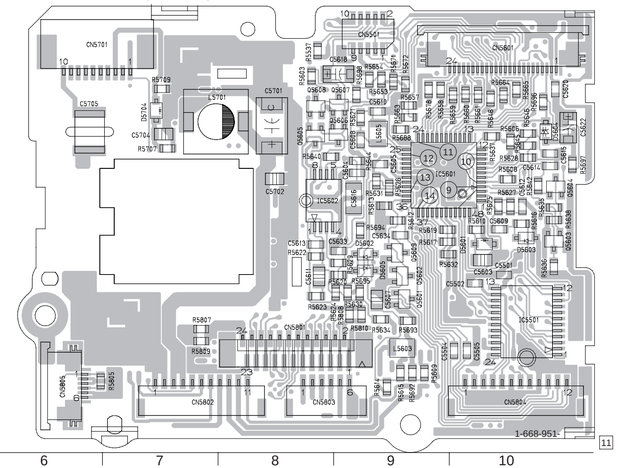




**• For Printed Wiring Boards.**

• This board is four-layer print board. However, the patterns of layers 2 to 3 have not been included in the diagram.

There are few cases that the part isn't mounted in this model is printed on this diagram.

• Chip transistor

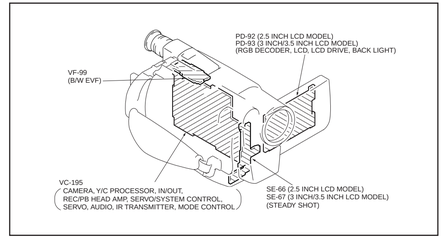
PD-92 (2.5 INCH LCD MODEL)
PD-93 (3 INCH/3.5 INCH LCD MODEL)
(RGB DECODER, LCD, LCD DRIVE, BACK LIGHT)
VF-99
(B/W EVF)
VC-195
CAMERA, Y/C PROCESSOR, IN/OUT,
REC/PB HEAD AMP, SERVO/SYSTEM CONTROL,
SERVO, AUDIO, IR TRANSMITTER, MODE CONTROL
SE-66 (2.5 INCH LCD MODEL)
SE-67 (3 INCH/3.5 INCH LCD MODEL)
(STEADY SHOT)

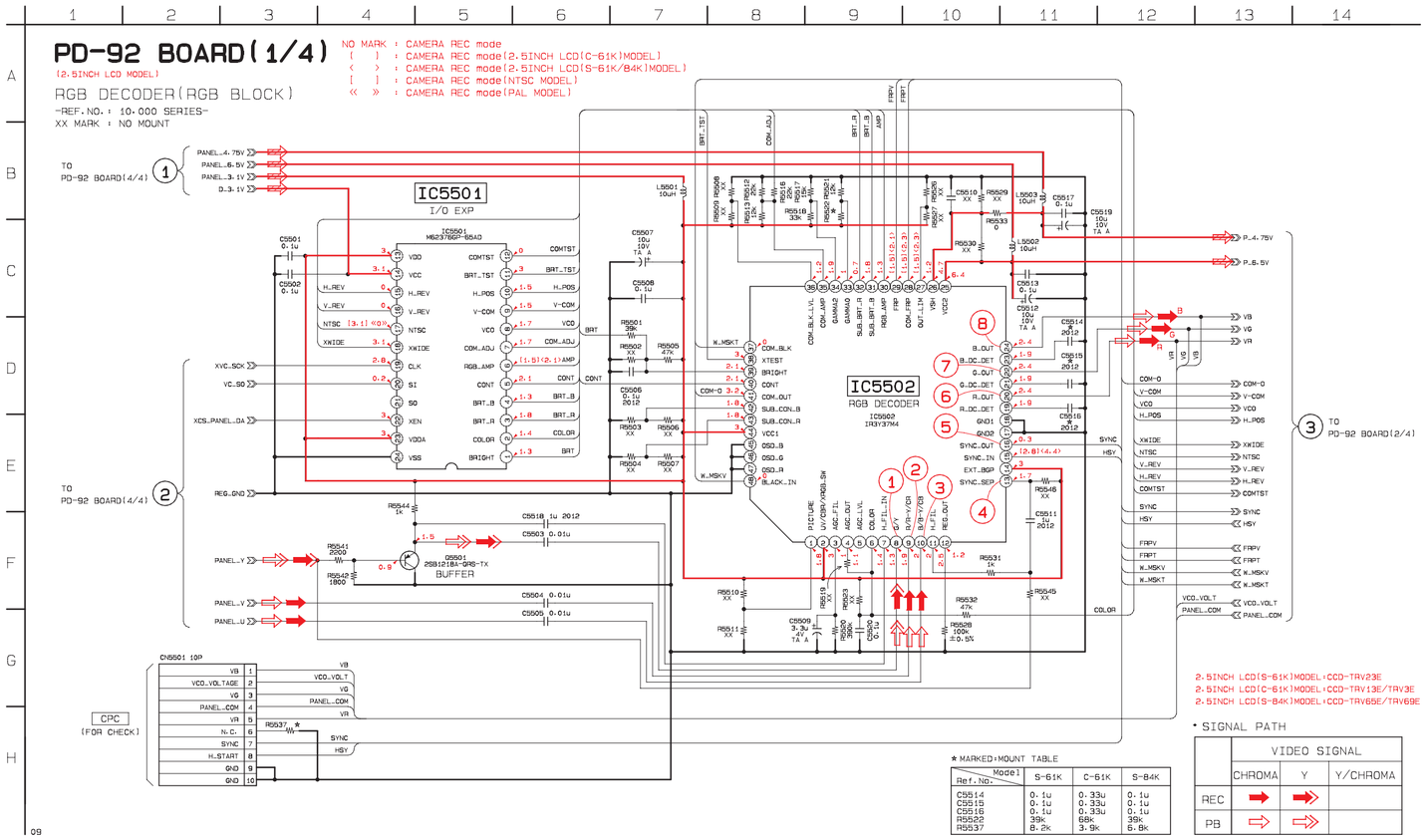


## PD-92 BOARD (1/4)
## CAMERA REC

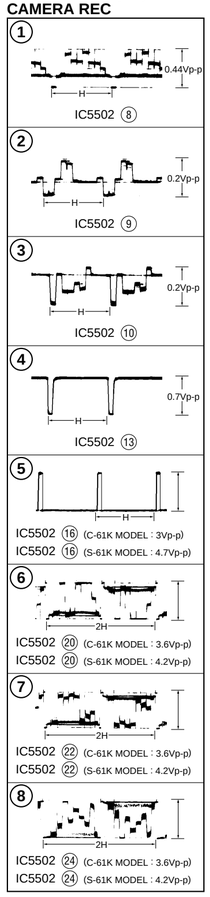




RGB DECODER
PD-92 (1/4) (2.5 INCH LCD MODEL)

• **For schematic diagrams.**
• Refer to page 4–79 for Printed Wiring Board.

**PD-92 BOARD (2/4)**
**CAMERA REC**

9

IC5601 4 (C-61K : 3Vp-p)
IC5601 4 (S-61K : 4.7Vp-p)

10
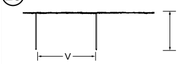

IC5601 5 (C-61K : 3Vp-p)

10
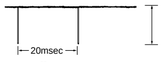

IC5601 5 (S-61K : 4.7Vp-p)

11
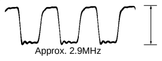

IC5601 24 (C-61K : 3.4Vp-p)

11

IC5601 24 (S-61K : 4.7Vp-p)

12
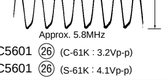

IC5601 26 (C-61K : 3.2Vp-p)
IC5601 26 (S-61K : 4.1Vp-p)

13
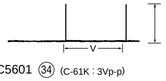

IC5601 34 (C-61K : 3Vp-p)

13
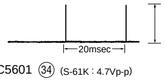

IC5601 34 (S-61K : 4.7Vp-p)

14
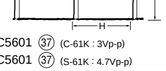

IC5601 37 (C-61K : 3Vp-p)
IC5601 37 (S-61K : 4.7Vp-p)

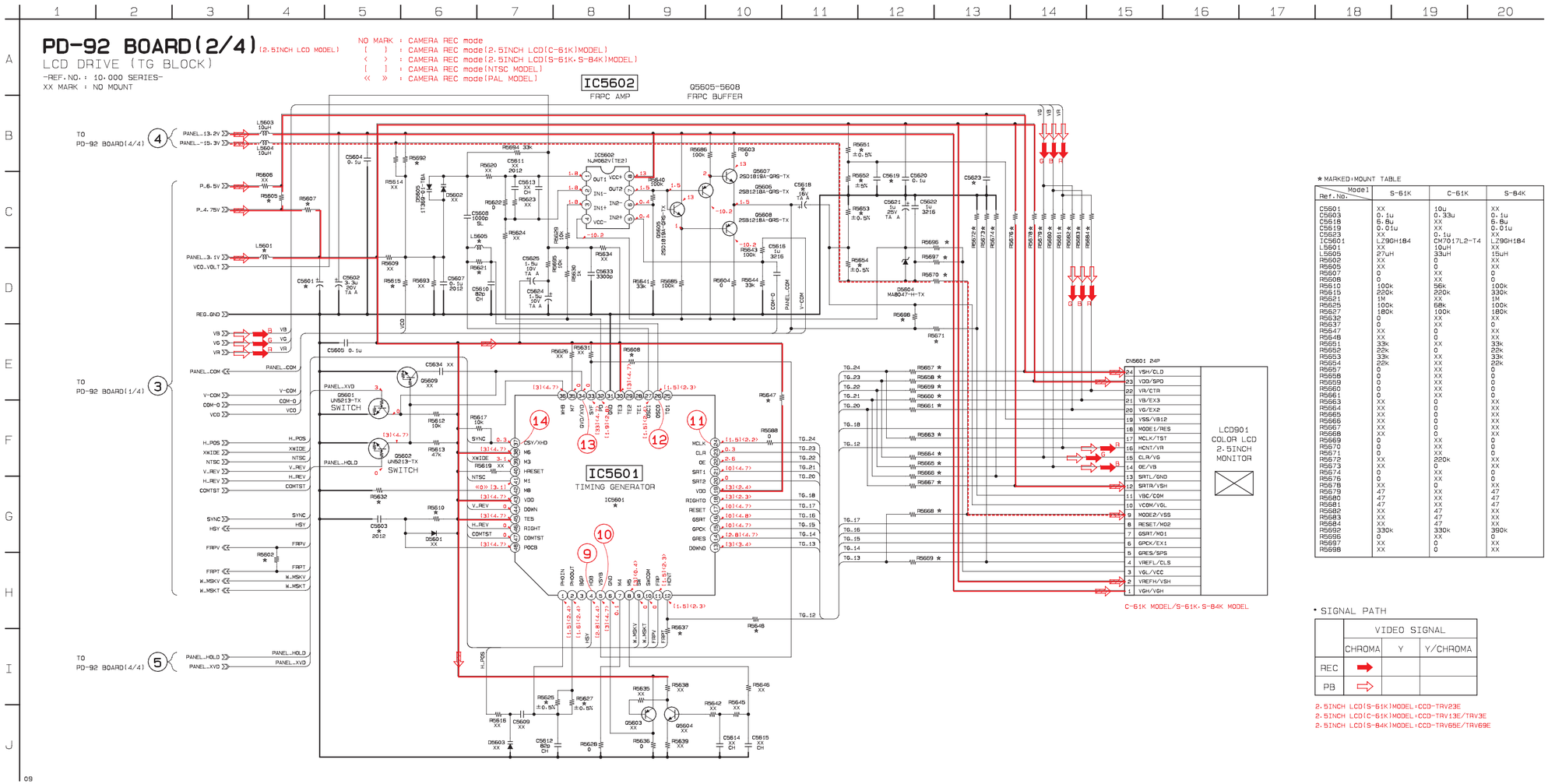


* MARKED MOUNT TABLE

| Ref.No. \ Model | S-61K | C-61K | S-B4K |
|---|---|---|---|
| C5501 | XX | 10u | XX |
| C5503 | 0.1u | 0.33u | 0.1u |
| C5518 | 6.8u | XX | 6.8u |
| C5519 | 0.01u | XX | 0.01u |
| C5523 | XX | 0.1u | XX |
| IC5601 | LZ99GH184 | CM7017L2-T4 | LZ99GH184 |
| L5501 | XX | 10uH | XX |
| L5505 | 27uH | 33uH | 15uH |
| R5502 | XX | 0 | XX |
| R5505 | XX | 0 | XX |
| R5507 | 0 | XX | 0 |
| R5508 | 0 | XX | 0 |
| R5510 | 100k | 56k | 100k |
| R5515 | 220k | 220k | 330k |
| R5521 | 1M | XX | 1M |
| R5525 | 100k | 68k | 100k |
| R5527 | 180k | 100k | 180k |
| R5532 | 0 | XX | XX |
| R5537 | 0 | XX | 0 |
| R5547 | XX | 0 | XX |
| R5548 | XX | 0 | XX |
| R5551 | 33k | XX | 33k |
| R5552 | 22k | 0 | 22k |
| R5553 | 33k | XX | 33k |
| R5554 | 22k | XX | 22k |
| R5557 | 0 | XX | 0 |
| R5558 | 0 | XX | 0 |
| R5559 | 0 | XX | 0 |
| R5560 | 0 | XX | 0 |
| R5561 | 0 | XX | 0 |
| R5563 | XX | 0 | XX |
| R5564 | XX | 0 | XX |
| R5565 | XX | 0 | XX |
| R5566 | XX | 0 | XX |
| R5567 | XX | 0 | XX |
| R5568 | XX | 0 | XX |
| R5569 | 0 | XX | 0 |
| R5570 | 0 | XX | 0 |
| R5571 | 0 | XX | 0 |
| R5572 | XX | 220k | XX |
| R5573 | XX | 0 | XX |
| R5574 | 0 | XX | 0 |
| R5576 | 0 | XX | 0 |
| R5578 | XX | 0 | XX |
| R5579 | 47 | XX | 47 |
| R5580 | 47 | XX | 47 |
| R5581 | 47 | XX | 47 |
| R5582 | XX | 47 | XX |
| R5583 | XX | 47 | XX |
| R5584 | XX | 47 | XX |
| R5592 | 330k | 330k | 390k |
| R5596 | 0 | XX | 0 |
| R5597 | XX | 0 | XX |
| R5598 | XX | 0 | XX |

• SIGNAL PATH

| | VIDEO SIGNAL | | |
|---|---|---|---|
| | CHROMA | Y | Y/CHROMA |
| REC | ➡ | | |
| PB | ⇨ | | |

2.5INCH LCD(S-61K)MODEL:CCD-TRV23E
2.5INCH LCD(C-61K)MODEL:CCD-TRV13E/TRV3E
2.5INCH LCD(S-B4K)MODEL:CCD-TRV65E/TRV69E

• **For schematic diagrams.**
• Refer to page 4–79 for Printed Wiring Board.

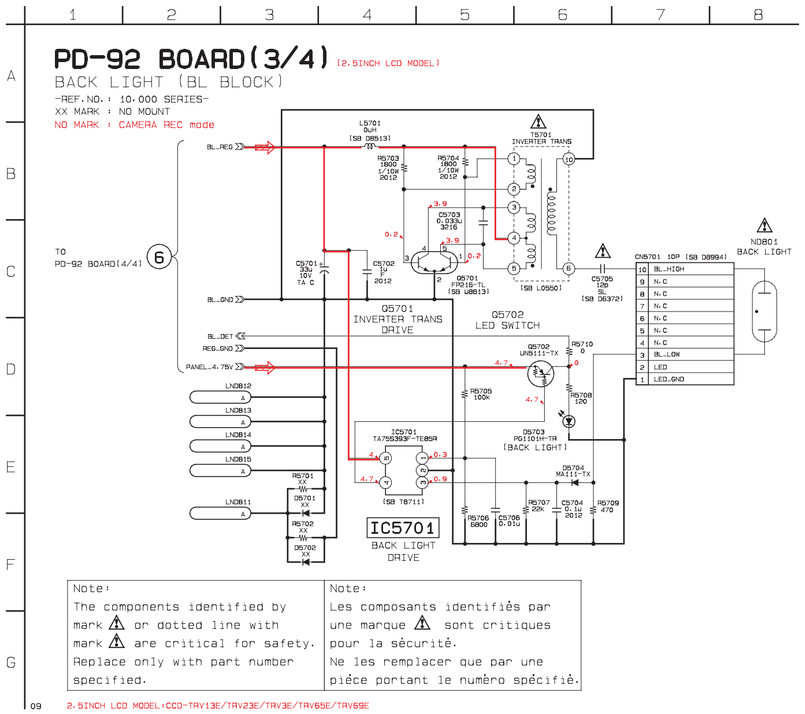
PD-92 BOARD(3/4) (2.5INCH LCD MODEL)
BACK LIGHT (BL BLOCK)
-REF.NO.: 10.000 SERIES-
XX MARK : NO MOUNT
NO MARK : CAMERA REC mode
TO PD-92 BOARD(4/4)
Q5701 INVERTER TRANS DRIVE
Q5702 LED SWITCH
IC5701 BACK LIGHT DRIVE
TS701 INVERTER TRANS
CN5701 10P
ND801 BACK LIGHT
Note: The components identified by mark ⚠ or dotted line with mark ⚠ are critical for safety. Replace only with part number specified.
Note: Les composants identifiés par une marque ⚠ sont critiques pour la sécurité. Ne les remplacer que par une pièce portant le numéro spécifié.
09 2.5INCH LCD MODEL:CCD-TRV13E/TRV23E/TRV3E/TRV65E/TRV69E



• **For schematic diagrams.**
• Refer to page 4–79 for Printed Wiring Board.

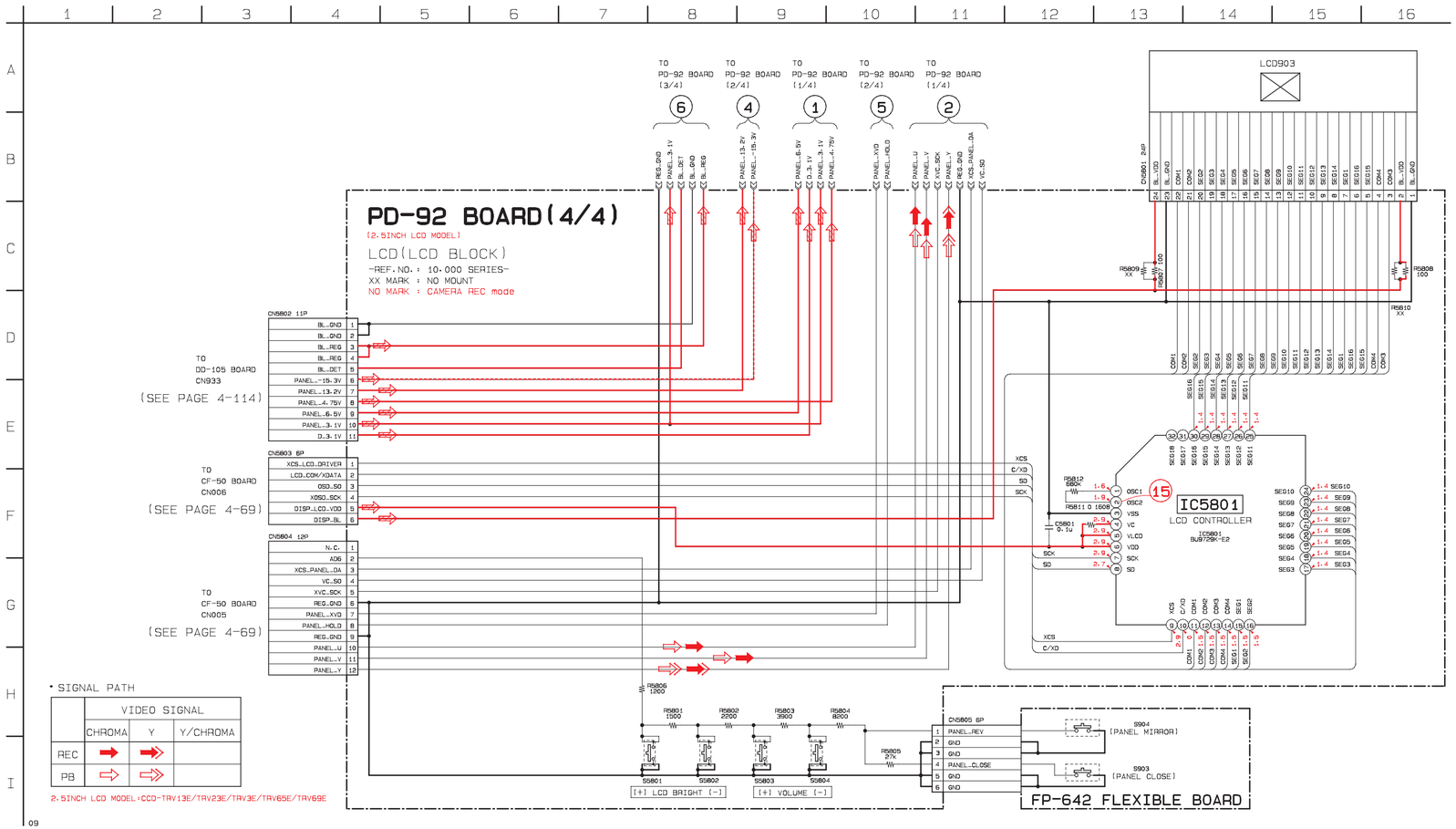




**PD-92 BOARD (4/4)**
**CAMERA REC**

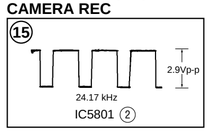


**BACK LIGHT, LCD**
**PD-92 (3/4, 4/4) (2.5 INCH LCD MODEL)**

## PD-93 (RGB DECODER, LCD DRIVE, BACK LIGHT, LCD (3 INCH/3.5 INCH LCD MODEL) PRINTED WIRING BOARD

– Ref No. PD-93 BOARD: 10,000 series –

PD-93 BOARD

| | | | | | | | |
|---|---|---|---|---|---|---|---|
| C4501 | B-2 | D4702 | A-6 | R4546 | B-2 | R4680 | D-2 |
| C4502 | B-2 | D4704 | D-5 | R4602 | C-3 | R4681 | D-2 |
| C4503 | B-11 | | | R4603 | D-10 | R4682 | D-3 |
| C4504 | B-11 | IC4501 | A-12 | R4604 | D-11 | R4683 | D-3 |
| C4505 | B-11 | IC4502 | B-3 | R4605 | A-2 | R4683 | D-11 |
| C4506 | B-3 | IC4601 | C-11 | R4606 | A-2 | R4684 | D-3 |
| C4507 | A-3 | IC4602 | C-3 | R4607 | A-1 | R4685 | C-10 |
| C4508 | B-11 | IC4701 | D-4 | R4608 | C-2 | R4686 | D-10 |
| C4509 | B-3 | IC4801 | A-4 | R4609 | B-11 | R4692 | B-11 |
| C4510 | A-3 | | | R4610 | C-2 | R4693 | C-10 |
| C4511 | B-2 | L4501 | A-3 | R4612 | B-11 | R4694 | C-10 |
| C4512 | A-2 | L4502 | A-2 | R4613 | B-11 | R4695 | C-3 |
| C4513 | B-2 | L4601 | A-10 | R4614 | C-10 | R4696 | D-12 |
| C4514 | B-2 | L4603 | B-11 | R4615 | B-11 | R4697 | D-12 |
| C4515 | B-2 | L4604 | A-11 | R4616 | B-12 | R4698 | D-3 |
| C4516 | B-2 | L4605 | C-11 | R4617 | B-11 | R4701 | B-6 |
| C4517 | A-2 | L4701 | C-9 | R4619 | B-11 | R4702 | A-7 |
| C4518 | A-11 | | | R4620 | C-3 | R4703 | B-4 |
| C4519 | A-3 | Q4501 | A-11 | R4621 | C-10 | R4703 | D-9 |
| C4520 | C-3 | Q4601 | B-11 | R4622 | C-3 | R4704 | B-4 |
| C4601 | A-10 | Q4602 | B-11 | R4623 | C-3 | R4705 | D-9 |
| C4602 | B-11 | Q4603 | C-2 | R4624 | C-11 | R4706 | D-9 |
| C4603 | C-2 | Q4604 | C-2 | R4625 | B-11 | R4707 | D-5 |
| C4604 | D-3 | Q4605 | D-10 | R4626 | C-3 | R4708 | D-5 |
| C4605 | C-3 | Q4606 | D-10 | R4627 | B-11 | R4710 | D-9 |
| C4607 | C-10 | Q4607 | D-10 | R4628 | C-2 | R4801 | D-1 |
| C4608 | C-10 | Q4608 | D-10 | R4629 | C-3 | R4802 | C-1 |
| C4609 | B-12 | Q4609 | B-11 | R4630 | C-11 | R4803 | B-1 |
| C4610 | C-11 | Q4701 | C-4 | R4631 | C-3 | R4804 | A-1 |
| C4611 | C-3 | Q4702 | D-9 | R4632 | B-11 | R4806 | A-6 |
| C4612 | B-12 | | | R4634 | C-11 | R4806 | A-12 |
| C4613 | C-3 | R4501 | B-11 | R4635 | C-2 | R4807 | B-8 |
| C4614 | C-2 | R4502 | B-3 | R4636 | C-2 | R4808 | B-11 |
| C4615 | C-2 | R4503 | B-4 | R4637 | C-3 | R4809 | B-8 |
| C4616 | D-4 | R4504 | B-3 | R4638 | C-2 | R4810 | B-11 |
| C46181 | D-11 | R4505 | B-11 | R4639 | C-2 | R4811 | A-4 |
| C4619 | D-3 | R4506 | B-3 | R4640 | D-3 | R4812 | A-4 |
| C4620 | D-3 | R4507 | B-3 | R4641 | C-3 | | |
| C4621 | D-12 | R4508 | A-3 | R4642 | C-2 | S4801 | D-1 |
| C4622 | D-2 | R4509 | A-3 | R4643 | D-3 | S4802 | D-1 |
| C4623 | D-10 | R4510 | B-3 | R4644 | D-3 | S4803 | B-1 |
| C4624 | C-4 | R4511 | B-3 | R4645 | C-2 | S4804 | A-1 |
| C4625 | C-4 | R4512 | A-3 | R4646 | C-2 | | |
| C4633 | C-10 | R4513 | A-3 | R4647 | C-3 | T4701 | C-5 |
| C4634 | C-11 | R4514 | C-3 | R4648 | C-3 | | |
| C4701 | C-9 | R4516 | A-3 | R4651 | D-3 | | |
| C4702 | B-10 | R4516 | C-3 | R4652 | D-3 | | |
| C4703 | C-4 | R4517 | A-3 | R4653 | D-2 | | |
| C4704 | D-5 | R4518 | A-3 | R4654 | D-2 | | |
| C4705 | D-8 | R4519 | B-3 | R4657 | D-11 | | |
| C4706 | D-4 | R4520 | B-3 | R4658 | D-11 | | |
| C4707 | C-4 | R4521 | A-3 | R4659 | D-11 | | |
| C4801 | A-4 | R4522 | A-3 | R4660 | D-11 | | |
| | | R4523 | C-3 | R4661 | D-11 | | |
| CN4501 | C-12 | R4526 | A-3 | R4663 | D-11 | | |
| CN4601 | D-12 | R4527 | A-3 | R4664 | D-3 | | |
| CN4701 | D-9 | R4528 | B-3 | R4665 | D-3 | | |
| CN4801 | B-9 | R4529 | A-3 | R4666 | D-3 | | |
| CN4802 | A-8 | R4530 | A-2 | R4667 | D-3 | | |
| CN4803 | A-9 | R4531 | C-2 | R4668 | C-12 | | |
| CN4804 | A-10 | R4532 | A-12 | R4669 | D-12 | | |
| CN4805 | A-7 | R4533 | A-2 | R4670 | D-2 | | |
| CN4806 | B-12 | R4534 | B-2 | R4671 | D-3 | | |
| | | R4535 | B-2 | R4672 | D-10 | | |
| D4601 | C-2 | R4536 | B-2 | R4673 | D-12 | | |
| D4602 | C-10 | R4537 | C-2 | R4674 | D-3 | | |
| D4603 | B-12 | R4541 | A-11 | R4676 | D-2 | | |
| D4605 | C-10 | R4542 | A-11 | R4677 | D-11 | | |
| D4614 | D-12 | R4544 | A-11 | R4678 | D-2 | | |
| D4701 | B-6 | R4545 | C-2 | R4678 | D-3 | | |

## PD-93 BOARD (SIDE B)

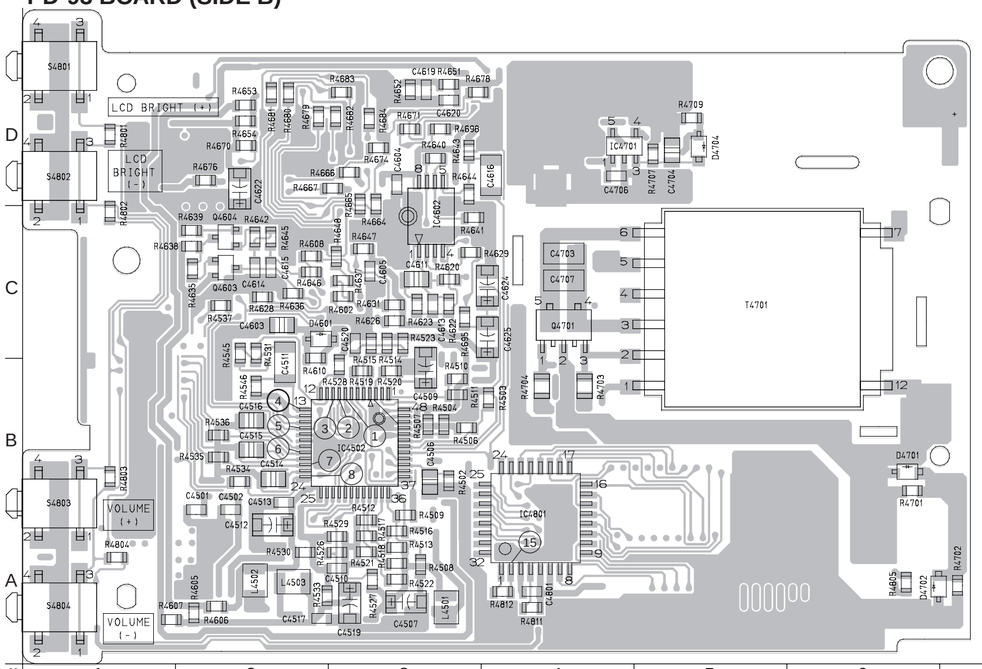


## PD-93 BOARD (SIDE A)

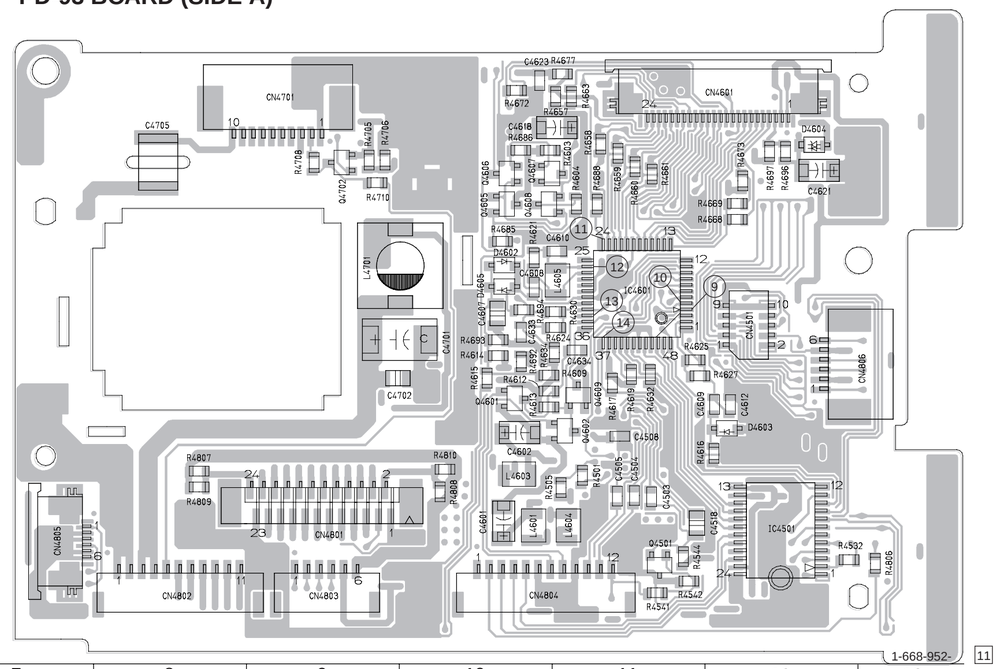


1-668-952-11

- **For Printed Wiring Boards.**
- This board is four-layer print board. However, the patterns of layers 2 to 3 have not been included in the diagram.

There are few cases that the part isn't mounted in this model is printed on this diagram.

- Chip transistor

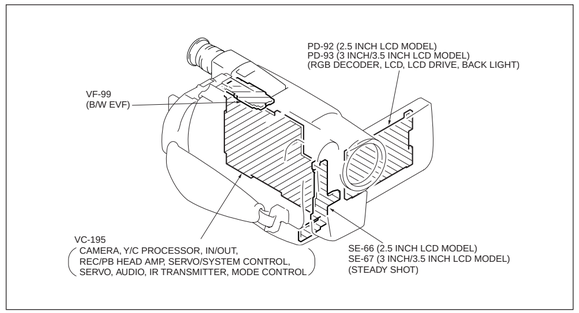
PD-92 (2.5 INCH LCD MODEL)
PD-93 (3 INCH/3.5 INCH LCD MODEL)
(RGB DECODER, LCD, LCD DRIVE, BACK LIGHT)
VF-99
(B/W EVF)
VC-195
CAMERA, Y/C PROCESSOR, IN/OUT,
REC/PB HEAD AMP, SERVO/SYSTEM CONTROL,
SERVO, AUDIO, IR TRANSMITTER, MODE CONTROL
SE-66 (2.5 INCH LCD MODEL)
SE-67 (3 INCH/3.5 INCH LCD MODEL)
(STEADY SHOT)

• **For schematic diagrams.**
• Refer to page 4–90 for Printed Wiring Board.

**PD-93 BOARD (2/4)**
**CAMERA REC**

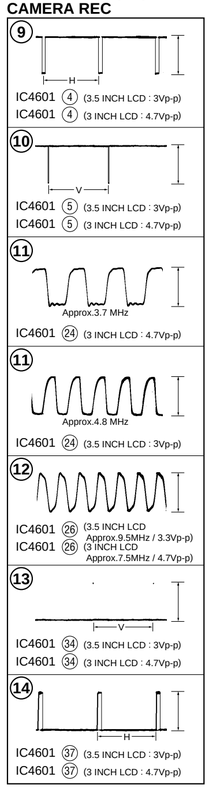
9
H
IC4601 4 (3.5 INCH LCD : 3Vp-p)
IC4601 4 (3 INCH LCD : 4.7Vp-p)
10
V
IC4601 5 (3.5 INCH LCD : 3Vp-p)
IC4601 5 (3 INCH LCD : 4.7Vp-p)
11
Approx.3.7 MHz
IC4601 24 (3 INCH LCD : 4.7Vp-p)
11
Approx.4.8 MHz
IC4601 24 (3.5 INCH LCD : 3Vp-p)
12
IC4601 26 (3.5 INCH LCD Approx.9.5MHz / 3.3Vp-p)
IC4601 26 (3 INCH LCD Approx.7.5MHz / 4.7Vp-p)
13
V
IC4601 34 (3.5 INCH LCD : 3Vp-p)
IC4601 34 (3 INCH LCD : 4.7Vp-p)
14
H
IC4601 37 (3.5 INCH LCD : 3Vp-p)
IC4601 37 (3 INCH LCD : 4.7Vp-p)

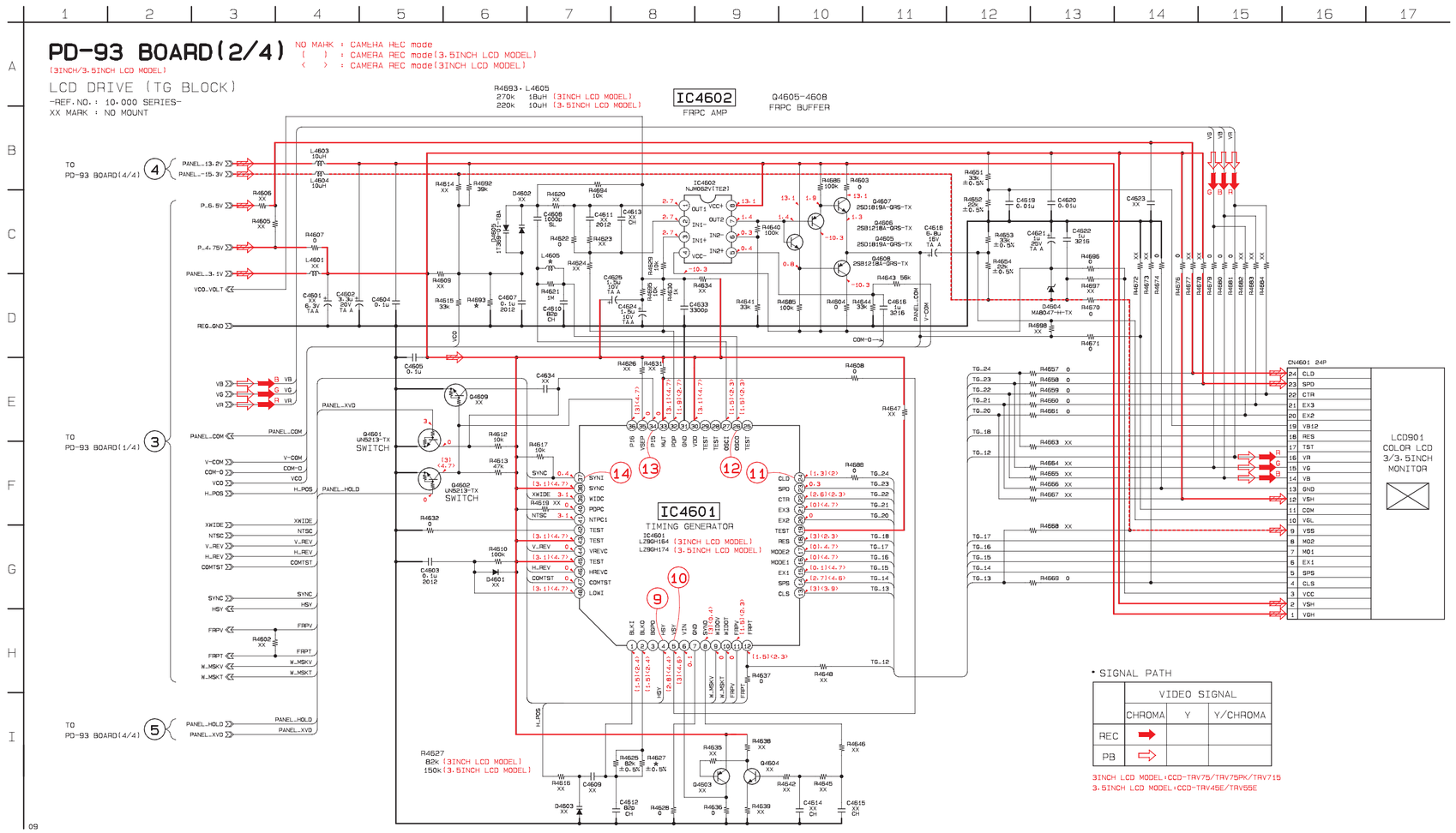


• SIGNAL PATH

| | VIDEO SIGNAL | | |
|---|---|---|---|
| | CHROMA | Y | Y/CHROMA |
| REC | ➡ | | |
| PB | ⇨ | | |

3INCH LCD MODEL:CCD-TRV75/TRV75PK/TRV715
3.5INCH LCD MODEL:CCD-TRV45E/TRV55E

• **For schematic diagrams.**
• Refer to page 4–90 for Printed Wiring Board.

# PD-93 BOARD (3/4) (3INCH/3.5INCH LCD MODEL)

BACK LIGHT (BL BLOCK)

-REF.NO. : 10.000 SERIES-
XX MARK : NO MOUNT
NO MARK : CAMERA REC mode

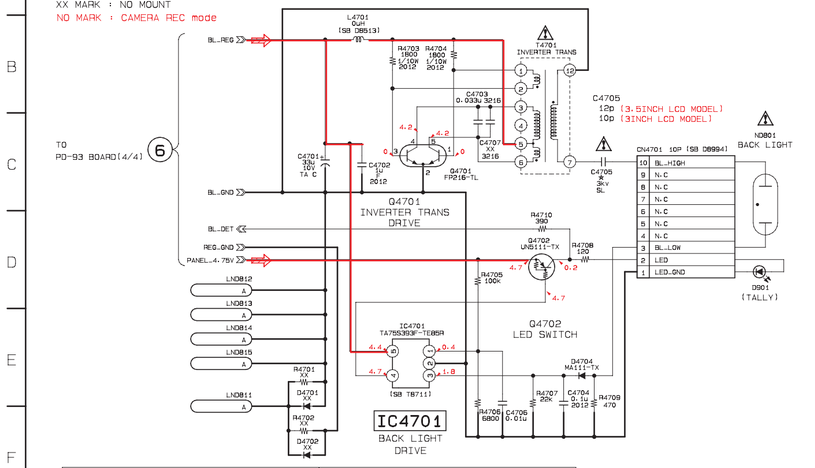


| Note: | Note: |
|---|---|
| The components identified by mark ⚠ or dotted line with mark ⚠ are critical for safety. Replace only with part number specified. | Les composants identifiés par une marque ⚠ sont critiques pour la sécurité. Ne les remplacer que par une pièce portant le numéro spécifié. |

3INCH LCD MODEL:CCD-TRV75/TRV75PK/TRV715
3.5INCH LCD MODEL:CCD-TRV45E/TRV55E



• **For schematic diagrams.**
• Refer to page 4–90 for Printed Wiring Board.

# PD-93 BOARD (4/4)

(3INCH/3.5INCH LCD MODEL)

LCD (LCD BLOCK)

-REF.NO. : 10.000 SERIES-
XX MARK : NO MOUNT
NO MARK : CAMERA REC mode

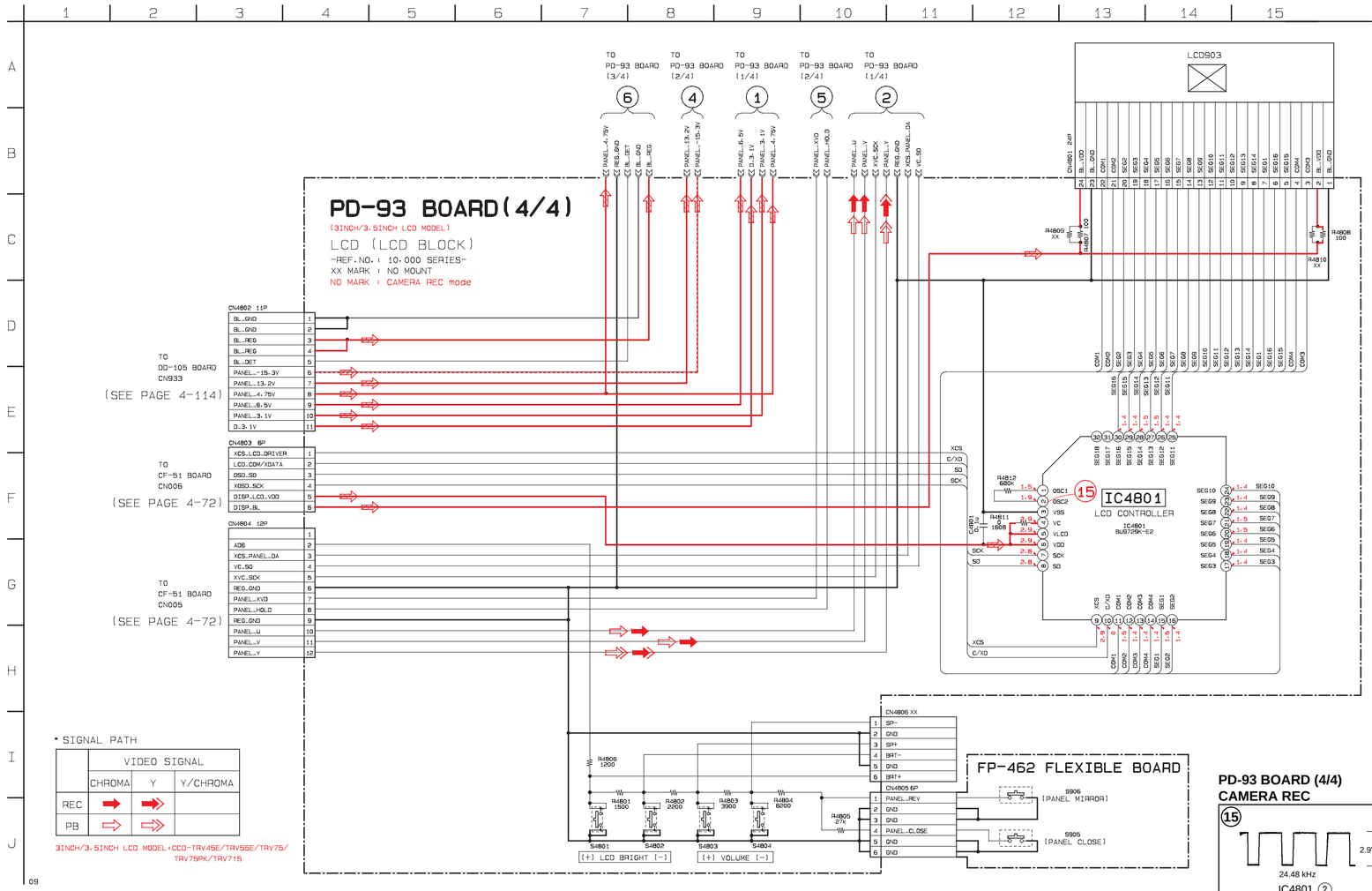


• SIGNAL PATH

| | VIDEO SIGNAL | | |
|---|---|---|---|
| | CHROMA | Y | Y/CHROMA |
| REC | ➡ | ➡ | |
| PB | ⇨ | ⇨ | |

3INCH/3.5INCH LCD MODEL:CCD-TRV45E/TRV55E/TRV75/TRV75PK/TRV715

**PD-93 BOARD (4/4)**
**CAMERA REC**

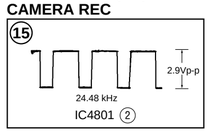

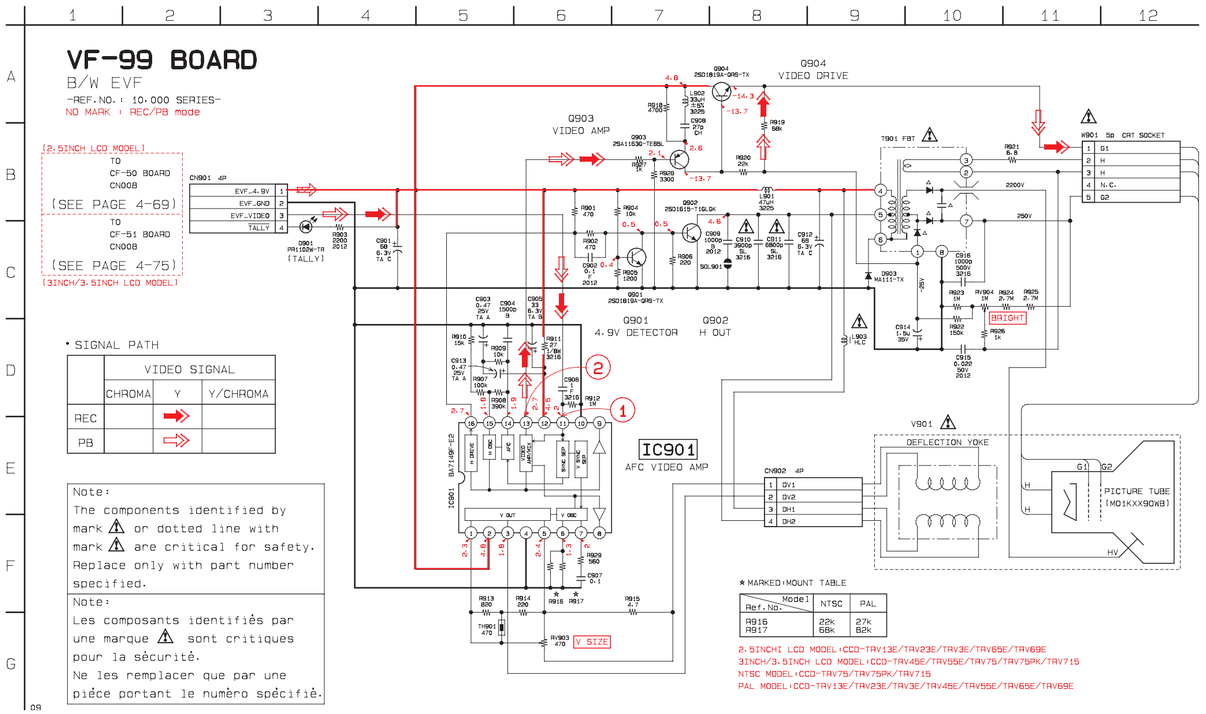


**VF-99 BOARD**
**CAMERA REC**

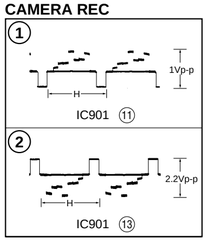

## VF-99 (B/W EVF) PRINTED WIRING BOARD

– Ref No. VF-99 BOARD: 10,000 series –

### VF-99 BOARD (SIDE A)

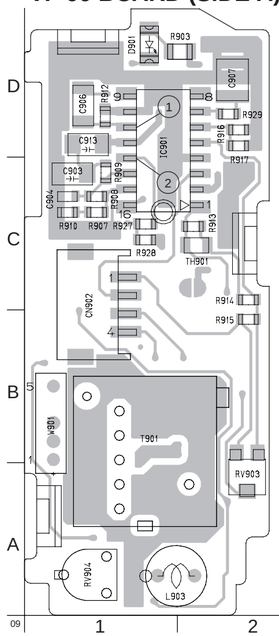


### VF-99 BOARD (SIDE B)

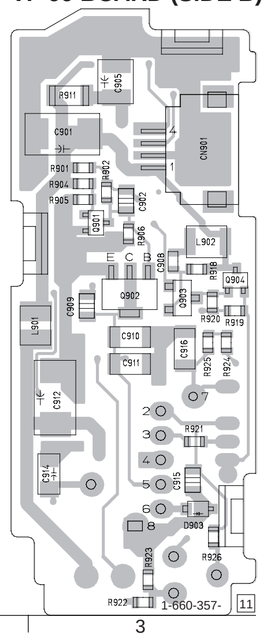


VF-99 BOARD

| | | | |
|---|---|---|---|
| C901 | D-3 | R919 | B-3 |
| C902 | C-3 | R920 | C-3 |
| C903 | C-1 | R921 | B-3 |
| C904 | C-1 | R922 | A-3 |
| C905 | D-3 | R923 | A-3 |
| C906 | D-1 | R924 | B-3 |
| C907 | D-2 | R925 | B-3 |
| C908 | C-3 | R926 | A-3 |
| C909 | C-3 | R927 | C-1 |
| C910 | B-3 | R928 | C-1 |
| C911 | B-3 | R928 | D-2 |
| C912 | B-3 | | |
| C913 | D-1 | RV903 | A-2 |
| C914 | A-3 | RV904 | A-1 |
| C915 | A-3 | | |
| C916 | B-3 | T901 | B-1 |
| | | | |
| CN901 | D-3 | TH901 | C-2 |
| CN902 | C-1 | | |
| | | W901 | B-1 |
| D901 | D-1 | | |
| D903 | A-3 | | |
| | | | |
| IC901 | D-1 | | |
| | | | |
| L901 | B-3 | | |
| L902 | C-3 | | |
| L903 | A-1 | | |
| | | | |
| Q901 | C-3 | | |
| Q902 | C-3 | | |
| Q903 | C-3 | | |
| Q904 | C-3 | | |
| | | | |
| R901 | C-3 | | |
| R902 | C-3 | | |
| R903 | D-2 | | |
| R904 | C-3 | | |
| R905 | C-3 | | |
| R906 | C-3 | | |
| R907 | C-1 | | |
| R908 | C-1 | | |
| R909 | C-1 | | |
| R910 | C-1 | | |
| R911 | D-3 | | |
| R912 | D-1 | | |
| R913 | C-2 | | |
| R914 | C-2 | | |
| R915 | B-2 | | |
| R916 | D-2 | | |
| R917 | D-2 | | |
| R918 | C-3 | | |

- **For Printed Wiring Boards.**
- This board is four-layer print board. However, the patterns of layers 2 to 3 have not been included in the diagram.

There are few cases that the part isn't mounted in this model is printed on this diagram.

- Chip transistor

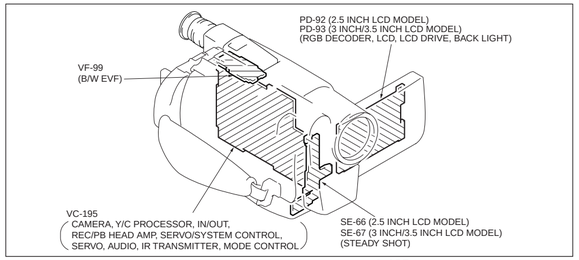
PD-92 (2.5 INCH LCD MODEL)
PD-93 (3 INCH/3.5 INCH LCD MODEL)
(RGB DECODER, LCD, LCD DRIVE, BACK LIGHT)
VF-99
(B/W EVF)
VC-195
CAMERA, Y/C PROCESSOR, IN/OUT,
REC/PB HEAD AMP, SERVO/SYSTEM CONTROL,
SERVO, AUDIO, IR TRANSMITTER, MODE CONTROL
SE-66 (2.5 INCH LCD MODEL)
SE-67 (3 INCH/3.5 INCH LCD MODEL)
(STEADY SHOT)

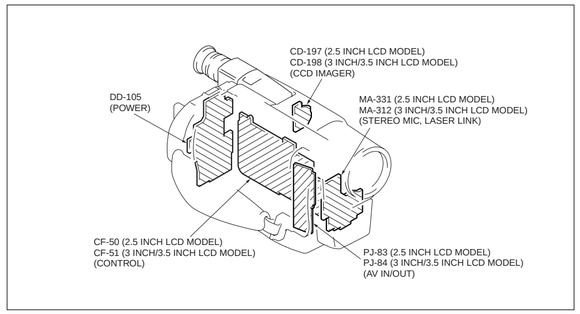


- **For Printed Wiring Boards.**
- This board is four-layer print board. However, the patterns of layers 2 to 3 have not been included in the diagram.

There are few cases that the part isn't mounted in this model is printed on this diagram.

- Chip transistor

Chip diode

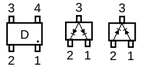




## DD-105 (POWER) PRINTED WIRING BOARD

– Ref No. DD-105 BOARD: 2,000 series –

DD-105 BOARD

| | | | | | |
|---|---|---|---|---|---|
| C801 | E-3 | L801 | D-7 | R823 | D-7 |
| C802 | E-3 | L802 | D-7 | R824 | D-2 |
| C803 | D-3 | L803 | D-8 | R825 | D-4 |
| C804 | E-3 | L804 | E-9 | R826 | D-4 |
| C805 | E-3 | L805 | B-7 | R827 | E-3 |
| C806 | E-3 | L806 | C-8 | R828 | F-3 |
| C807 | E-2 | L807 | C-7 | R829 | D-2 |
| C808 | E-3 | L808 | B-8 | R830 | D-2 |
| C809 | D-2 | L809 | C-7 | R831 | F-4 |
| C810 | D-3 | L810 | B-4 | R832 | D-4 |
| C811 | D-2 | L811 | B-3 | R833 | D-2 |
| C812 | D-4 | L812 | B-3 | R834 | D-2 |
| C813 | D-2 | L813 | B-3 | R835 | D-4 |
| C814 | E-8 | L814 | A-3 | R836 | D-4 |
| C815 | C-4 | L815 | A-3 | R837 | D-2 |
| C816 | E-9 | L816 | B-3 | R838 | D-3 |
| C817 | E-8 | L817 | A-3 | R839 | C-2 |
| C819 | C-3 | L818 | A-2 | R840 | C-3 |
| C820 | C-3 | L819 | A-3 | R841 | C-3 |
| C821 | C-2 | L820 | D-8 | R842 | E-2 |
| C822 | E-8 | | | R843 | C-2 |
| C823 | C-4 | LF801 | D-7 | R849 | E-2 |
| C824 | C-2 | | | R850 | E-2 |
| C825 | B-3 | PS801 | F-3 | R852 | D-2 |
| C826 | D-8 | PS802 | F-2 | R853 | D-2 |
| C827 | E-2 | PS803 | F-3 | R854 | D-2 |
| C828 | E-2 | PS804 | F-2 | R854 | D-2 |
| C829 | E-2 | PS805 | F-2 | R859 | E-3 |
| C830 | D-2 | PS806 | F-3 | R864 | E-3 |
| C831 | E-2 | | | R865 | A-2 |
| C832 | B-3 | Q801 | F-4 | R866 | B-2 |
| C833 | B-3 | Q802 | E-4 | R867 | E-2 |
| C834 | C-4 | Q803 | E-3 | R868 | A-2 |
| C836 | B-2 | Q804 | F-3 | R870 | A-7 |
| C837 | C-2 | Q805 | F-3 | R871 | A-7 |
| C838 | C-3 | Q806 | C-2 | R872 | B-6 |
| C840 | D-8 | Q807 | C-3 | R873 | A-5 |
| C841 | B-4 | Q808 | C-3 | R874 | B-5 |
| C843 | C-4 | Q809 | B-3 | R875 | A-2 |
| C844 | A-3 | Q810 | C-2 | R876 | B-5 |
| C846 | B-3 | Q812 | C-3 | R877 | A-7 |
| C847 | B-7 | Q813 | C-2 | R878 | A-2 |
| C848 | B-7 | Q814 | C-2 | R879 | B-6 |
| C849 | A-2 | Q815 | C-2 | R880 | B-6 |
| C850 | A-3 | Q817 | C-3 | R881 | B-6 |
| C851 | B-4 | Q819 | D-8 | R882 | B-6 |
| C852 | B-8 | Q820 | E-3 | R883 | A-8 |
| C853 | B-7 | Q823 | A-2 | R884 | B-8 |
| C854 | B-3 | Q824 | E-2 | R885 | B-7 |
| C855 | A-3 | Q826 | A-7 | R887 | B-8 |
| C856 | E-3 | Q827 | A-2 | R888 | B-8 |
| C857 | A-2 | Q828 | B-5 | R889 | A-7 |
| C860 | A-6 | Q829 | B-6 | R890 | A-7 |
| C861 | A-7 | Q830 | B-6 | R891 | A-8 |
| C862 | A-2 | Q831 | A-7 | R892 | A-8 |
| C863 | B-6 | Q832 | B-6 | R893 | B-8 |
| C864 | A-5 | Q833 | A-2 | R894 | A-7 |
| C866 | A-6 | Q834 | B-6 | R895 | A-6 |
| C867 | A-7 | Q835 | A-8 | R896 | A-8 |
| C868 | B-6 | Q836 | A-8 | R897 | A-8 |
| C869 | A-6 | Q837 | A-7 | R898 | A-7 |
| C871 | B-2 | Q838 | A-8 | R899 | A-7 |
| C872 | F-4 | Q839 | B-8 | R900 | A-6 |
| C873 | A-2 | Q840 | A-8 | R901 | A-6 |
| C874 | A-7 | Q841 | A-7 | R902 | A-6 |
| C875 | B-2 | Q842 | A-7 | R903 | A-8 |
| C876 | C-6 | Q843 | A-7 | R904 | A-8 |
| C877 | D-6 | Q844 | A-8 | R905 | A-8 |
| C885 | A-6 | Q845 | A-8 | R906 | A-8 |
| | | Q846 | A-7 | R907 | A-8 |
| CN801 | C-6 | Q847 | A-6 | R908 | B-2 |
| CN931 | C-5 | Q848 | A-8 | R910 | B-2 |
| CN932 | F-6 | Q849 | A-7 | R911 | B-2 |
| CN933 | A-4 | Q850 | A-8 | R912 | B-2 |
| CN934 | D-9 | Q851 | E-4 | R913 | E-6 |
| CN935 | G-7 | Q852 | B-2 | R914 | D-2 |
| | | Q853 | B-2 | R915 | E-2 |
| D801 | B-3 | Q854 | B-2 | R916 | A-7 |
| D802 | C-3 | Q855 | B-2 | R917 | A-7 |
| D803 | C-2 | Q856 | A-6 | R918 | A-2 |
| D804 | C-2 | Q932 | G-3 | R919 | A-7 |
| D805 | C-3 | Q933 | G-3 | R920 | A-7 |
| D806 | E-2 | Q934 | G-3 | R924 | C-5 |
| D807 | D-8 | | | R932 | G-3 |
| D809 | B-7 | R801 | E-2 | R933 | F-7 |
| D810 | B-2 | R802 | E-3 | R934 | F-6 |
| D812 | B-3 | R803 | E-3 | R935 | F-7 |
| D813 | F-4 | R804 | D-3 | R936 | F-6 |
| D814 | F-4 | R805 | D-3 | R937 | F-7 |
| D815 | F-4 | R807 | E-3 | R938 | F-7 |
| D816 | E-3 | R808 | E-2 | R939 | F-6 |
| D817 | F-3 | R808 | E-3 | R940 | F-3 |
| D818 | D-2 | R809 | D-3 | R941 | G-3 |
| D819 | E-3 | R810 | E-2 | R942 | E-9 |
| D838 | E-9 | R811 | D-2 | R943 | G-3 |
| D932 | G-2 | R812 | D-2 | | |
| D933 | F-4 | R813 | F-4 | T801 | B-7 |
| D934 | G-3 | R814 | D-4 | | |
| D935 | F-3 | R815 | D-3 | | |
| D936 | G-3 | R816 | D-4 | | |
| | | R817 | D-3 | | |
| FB931 | D-9 | R818 | D-2 | | |
| FB932 | E-9 | R819 | D-2 | | |
| FB933 | D-9 | R820 | D-3 | | |
| FB934 | D-9 | R821 | D-2 | | |
| | | R822 | E-3 | | |
| IC801 | D-3 | R822 | D-7 | | |
| IC802 | E-2 | R822 | D-8 | | |

## DD-105 BOARD (SIDE B)

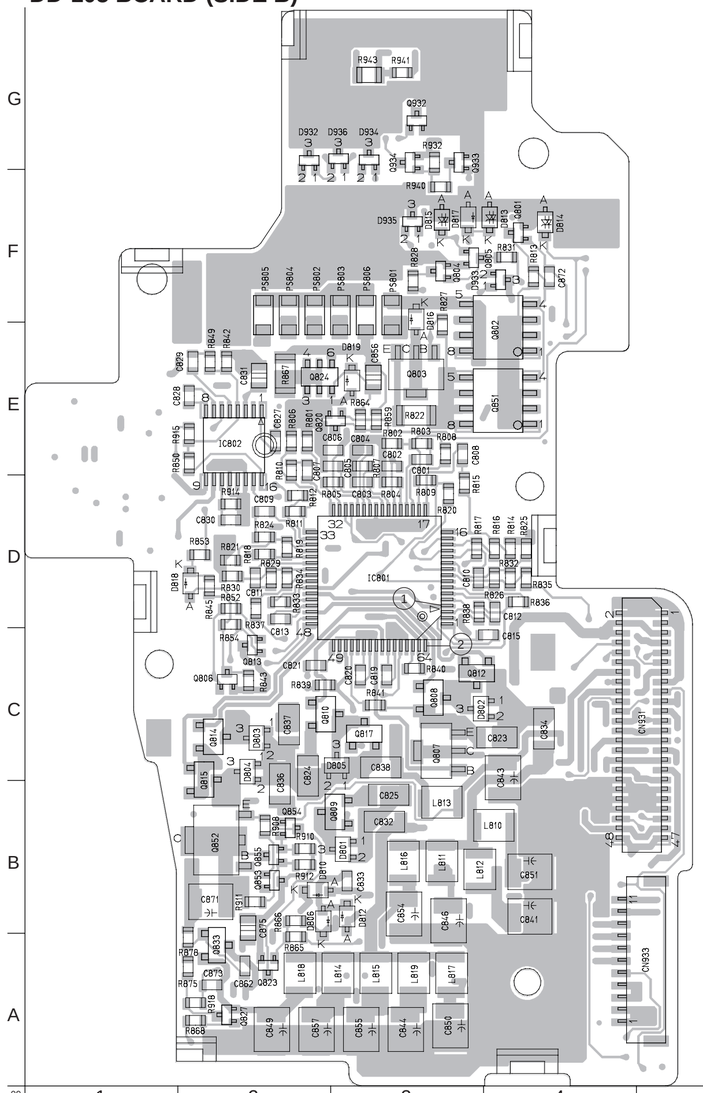




## DD-105 BOARD (SIDE A)

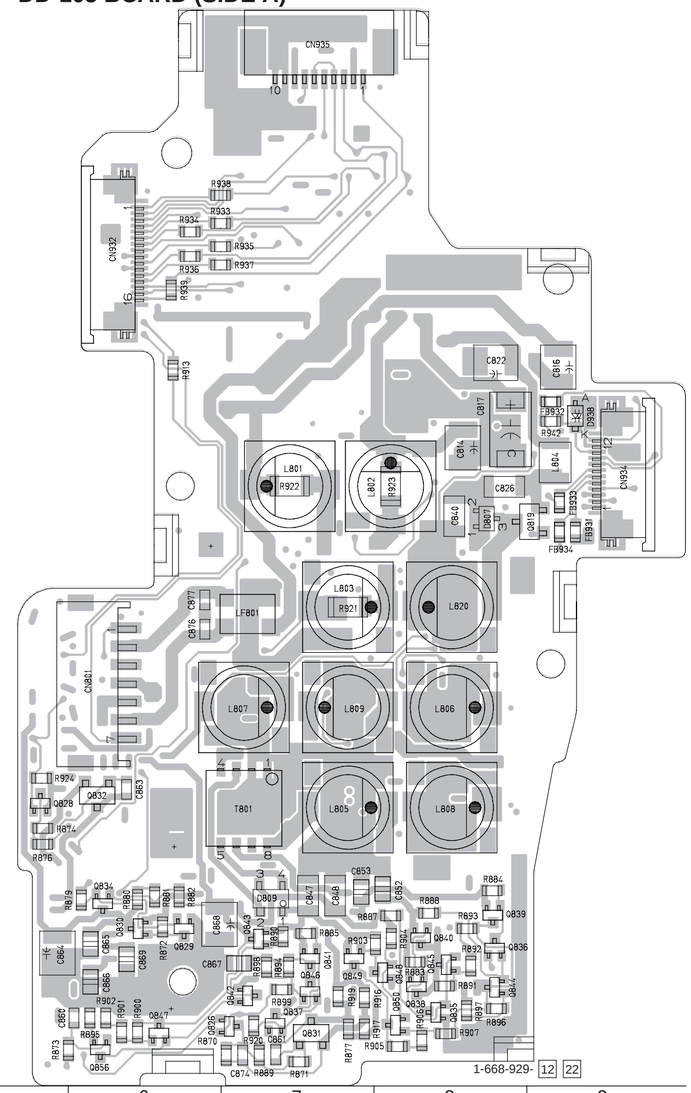

# DD-105 BOARD

POWER

-REF.NO.: 2-000 SERIES-
XX MARK : NO MOUNT
NO MARK : CAMERA REC mode(LCD ON)
( ) : CAMERA REC mode(COLOR EVF ON)
< > : CAMERA REC mode(B/W EVF ON)

**DD-105 BOARD**
**CAMERA REC**

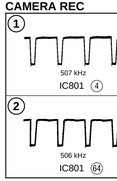

# SECTION 5
# ADJUSTMENTS

Refer to page 3 as Table for distinction functions of models and classification

## 5-1. CAMERA SECTION ADJUSTMENTS

### 1-1. PREPARATIONS BEFORE ADJUSTMENT (CAMERA SECTION)

#### 1-1-1. List of Service Tools

- Oscilloscope
- Color monitor
- Vectorscope
- Adjusting driver
- Regulated power supply
- Digital voltmeter

| Ref. No. | Name | Parts Code | Usage |
|---|---|---|---|
| J-1 | Filter for color temperature correction (C14) | J-6080-058-A | Auto white balance adjustment/check<br>White balance adjustment/check |
| J-2 | ND filter 1.0 | J-6080-808-A | White balance check |
| | ND filter 0.3 | J-6080-818-A | White balance check |
| J-3 | Pattern box PTB-450 | J-6082-200-A | |
| J-4 | Color chart for pattern box | J-6020-250-A | |
| J-5 | Adjusting remote commander (RM-95-remodeled partly) (Note 1) | J-6082-053-B | |
| J-6 | Siemens star | J-6080-875-A | For checking the flange back |
| J-7 | Multi CPC jig | J-6082-311-A | For adjusting LCD block |
| J-8 | CPC-7 jig | J-6082-382-A | For adjusting the video section |
| J-9 | Power code (Note 2) | J-6082-223-A | For connecting the battery terminal and DC power supply |
| J-10 | AFM DEV jig | J-6082-312-A | For adjusting the deviation |
| J-11 | Clear chart | J-6080-621-A | |
| J-12 | Extension cable (16P, 0.5 mm) | J-6082-357-A | For extension between the CD-197/198 board (CN401) and VC-195 board (CN501) |
| J-13 | IR receiver jig | J-6082-383-A | For adjusting the IR transmitter |
| J-14 | Extension cable (48P, 0.8 mm) | J-6082-188-A | For extension between the DD-105 board (CN931) and VC-195 board (CN914) |

**Note 1:** If the micro processor IC in the adjusting remote commander is not the new micro processor (UPD7503G-C56-12), the pages cannot be switched. In this case, replace with the new micro processor (8-759-148-35).

**Note 2:** Connect the adjusting remote commander to the LANC jack, and set the HOLD switch to the "ADJ" side, or press the battery switch of the battery terminal using adhesive tape, etc.

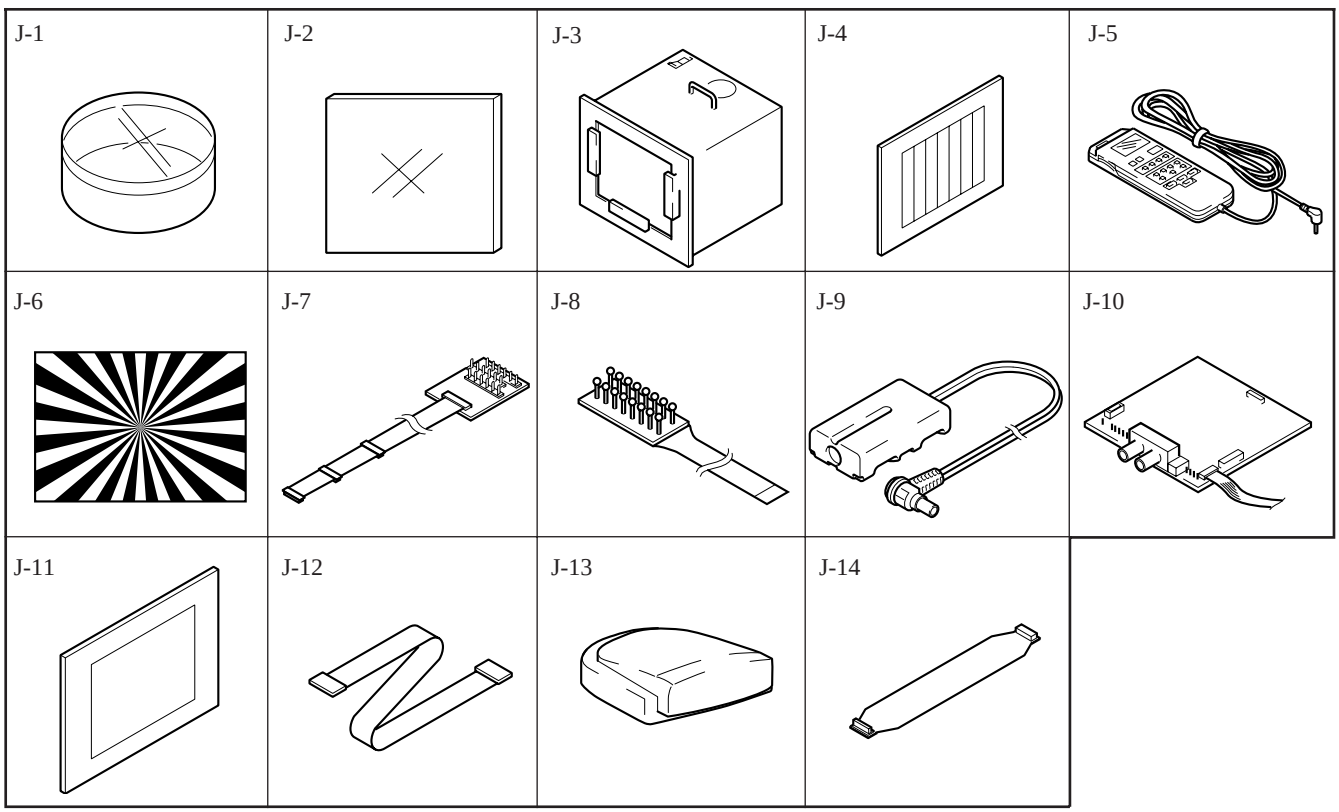


*Fig. 5-1-1.*

### 1-1-2. Preparations

**Note 1:** For details of how remove the cabinet and boards, refer to "2. DISASSEMBLY".

**Note 2:** When performing only the adjustments, the lens block and boards need not be disassembled.

1) Connect the equipment for adjustments according to Fig. 5-1-3, 4.
2) By setting the "Forced Camera Power ON mode", the camera power can be turned ON even if the front panel block (MA-312/331 board, power switch, microphone unit) has been removed. When removing the front panel block disconnect the following connector.
   1. VC-195 board CN903 (23P 0.5mm)
3) The intelligent accessory shoe (Intelligent accessory shoe model) or video light (Video light model) need not be assembled. If removing it. disconnect the following connector.
   1. VC-195 board CN909 (10P, 0.5mm)

**Note 3:** As removing the cabinet (R) (removing the VC-195 board CN911) means removing the lithium 3V power supply (CF-50/51 board) , data such as date, time, user-set menus will be lost. After completing adjustments, reset these data. If the cabinet (R) has been removed, the self-diagnosis data, data on history of use (total drum rotation time etc. ) will be lost. Before removing, note down the self-diagnosis data and data on the history use. (Refer to the "Service Mode" of "VIDEO SECTION ADJUSTMENT" for the data on the history use.)

**Note 4:** Setting the "Forced Camera Power ON" Mode
1) Select page: 0, address: 01, and set data: 01.
2) Select page: D, address: 10, set data: 01, and press the PAUSE button of the adjusting remote commander.
The above procedure will enable the camera power to be turned on with the front panel block removed. After completing adjustments, be sure to exit the "Forced Camera Power ON Mode".

**Note 5:** Exiting the "Forced Camera Power ON" Mode
1) Select page: 0, address: 01, and set data: 01.
2) Select page: D, address: 10, set data: 00, and press the PAUSE button of the adjusting remote commander.
3) Select page: 0, address: 01, and set data: 00.

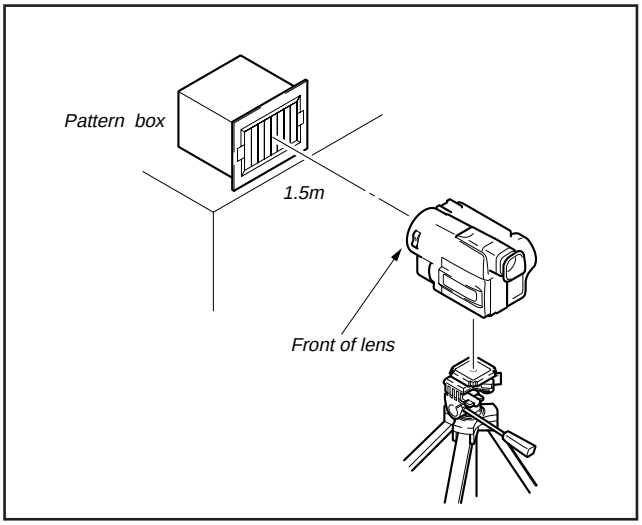


***Fig. 5-1-2.***

## 2.5 INCH LCD MODEL

**Note 1 :** 2.5" LCD model : CCD-TRV3E/TRV13E/TRV23E/ TRV65E/TRV69E

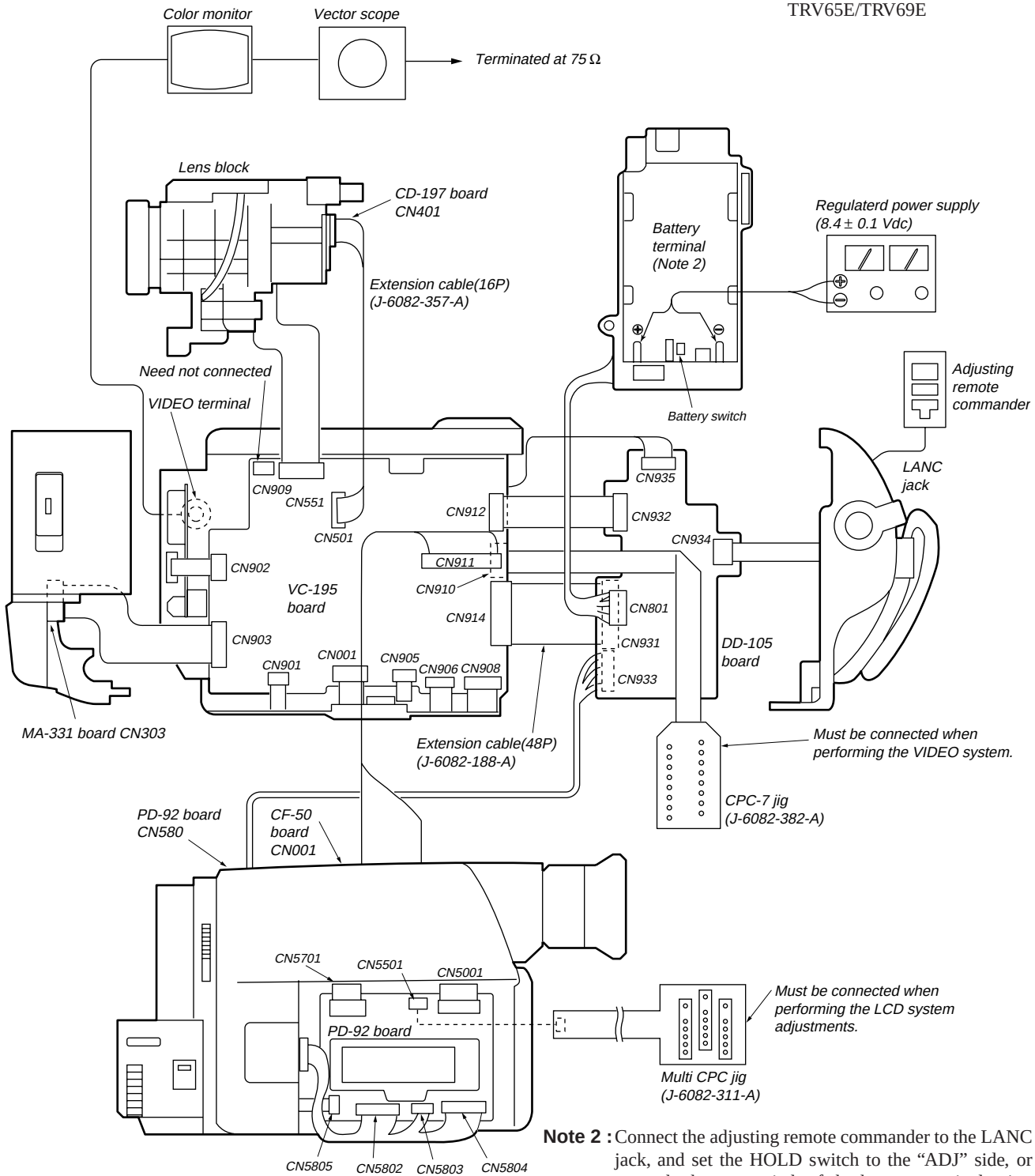


**Note 2 :** Connect the adjusting remote commander to the LANC jack, and set the HOLD switch to the "ADJ" side, or press the battery switch of the battery terminal using adhesive tape, etc. or use the AC power adaptor.

***Fig. 5-1-3.***

**3/3.5 INCH LCD MODEL**

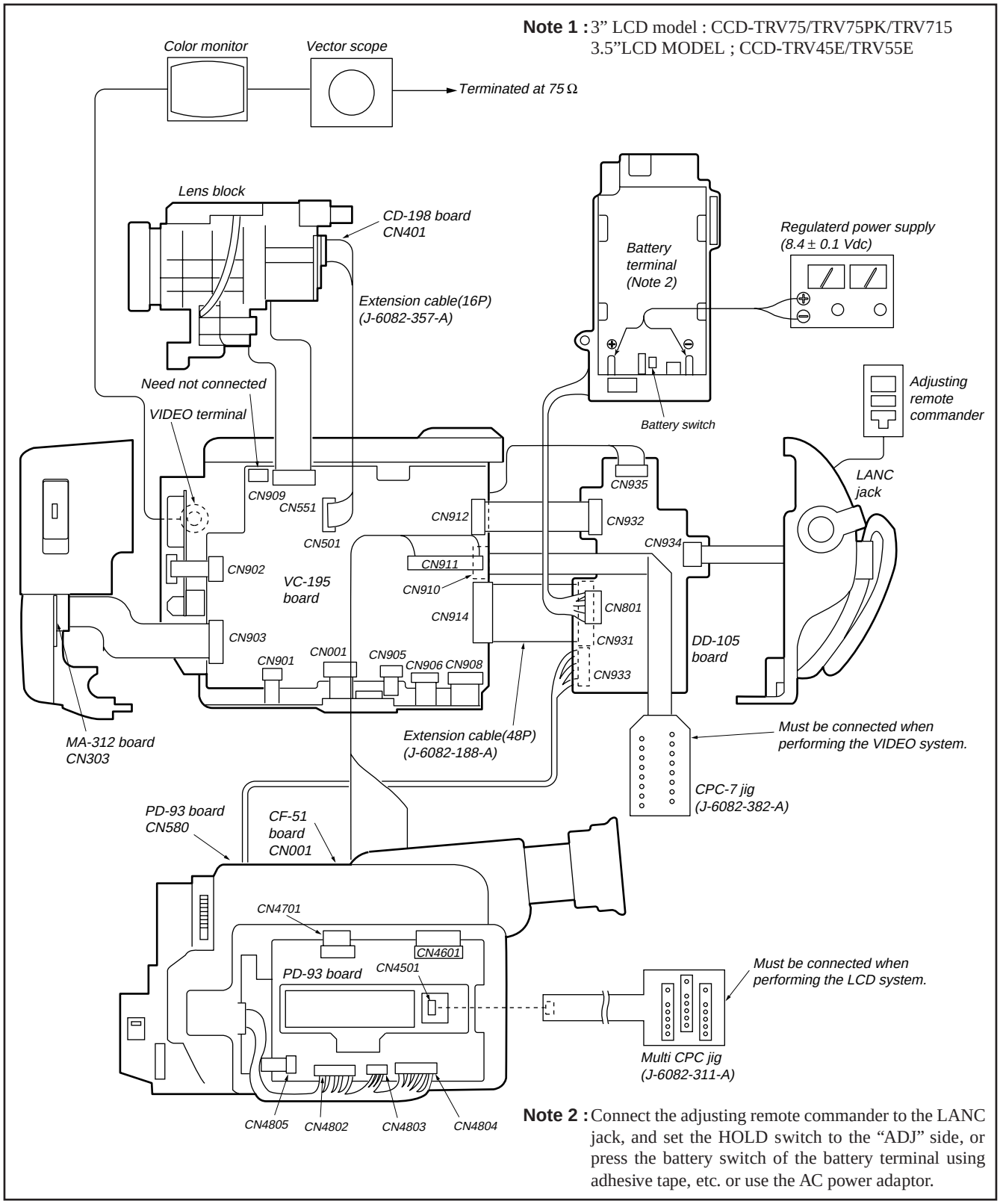


***Fig. 5-1-4.***

### 1-1-3.Precaution

### 1. Setting the Switch

Unless otherwise specified, set the switches as follows and perform adjustments without loading cassette.

1. POWER switch (MA-312/331 board) ..... CAMERA
2. NIGHT SHOT switch (Lens Block) ..... OFF (Night shot model)
3. DEMO MODE (Menu display) ..... OFF
4. DIGITAL ZOOM (Menu display) ..... OFF
5. STEADY SHOT (Menu display) ..... OFF
6. DISPLAY (Menu display) ..... V-OUT/LCD
7. FOCUS switch (MF-8500/MR-8500) ..... MANUAL (Manual Focus model)
8. PROGRAM AE (CF-50/51 board) ..... Auto
9. BACK LIGHT (CF-50/51 board) ..... OFF
10. PICTURE EFECT (CF-50/51 board) ..... OFF
11. 16 : 9 WIDE (Menu display) ..... OFF

### 2. Adjusting Procedure

Adjust in the given order.

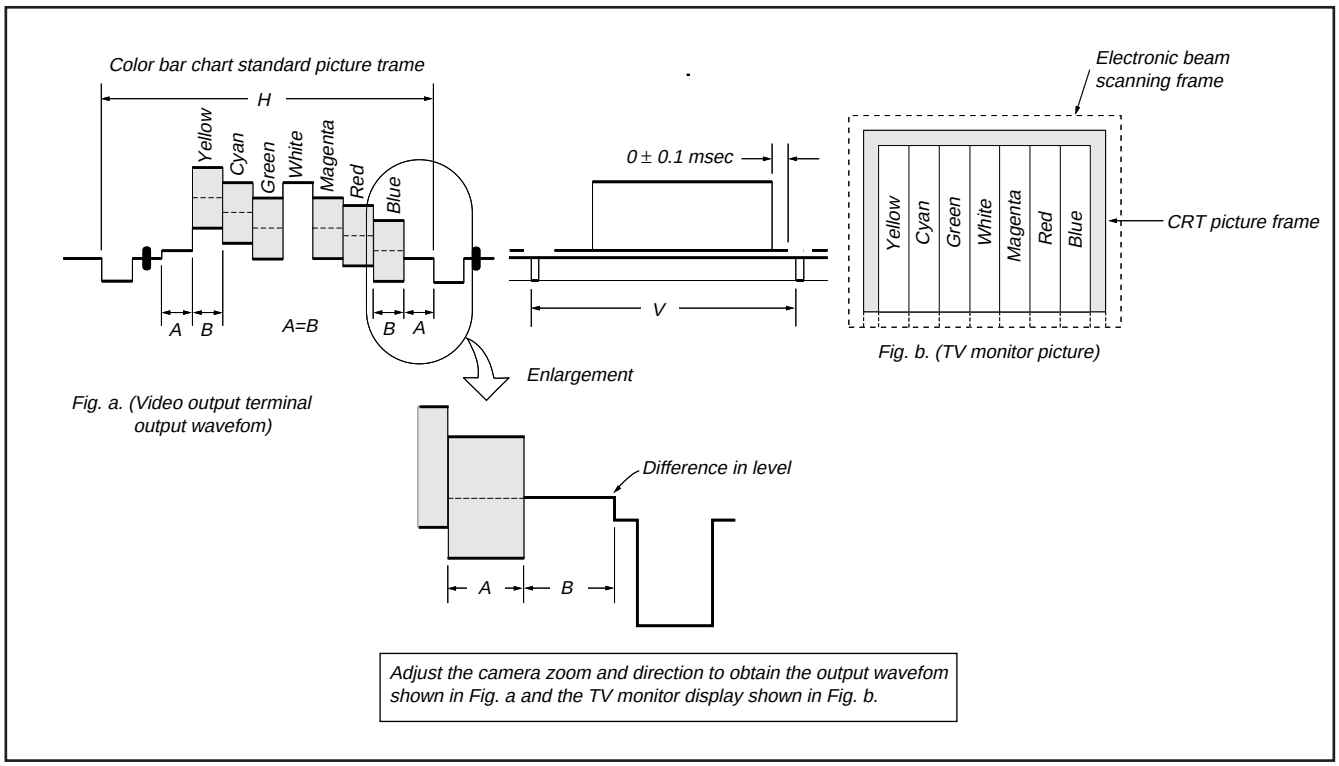


***Fig. 5-1-5.***

### 3. Subject

1) Color bar chart (Standard picture frame)
   Adjust the picture frame as shown in Fig. 5-1-5. if adjustments are performed using the color bar chart. (Standard picture frame)
2) White pattern (Standard picture frame)
   Remove the color bar chart from the pattern box, and insert a clear chart in its place. (Do not perform zoom operations during this time.)
3) Chart for flange back adjustment
   Combine a white A0 size (1189 mm x 841 mm) paper to a black one, and make the chart shown in Fig. 5-1-6.

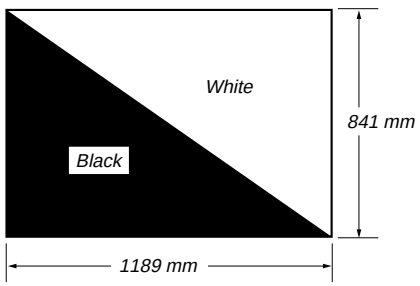


***Fig. 5-1-6.***

**Note :** Use the non-reflecting and non-glazing vellum paper whose size is more than A0, and make the boundary between white and black to be smoothly flat.

### 1-1-4. Adjusting Remote Commander

The adjusting remote commander is used for changing the calculation coefficient in signal processing, EVR data, etc. The adjusting remote commander performs bi-directional communication with the unit using the remote commander signal line (LANC). The resultant data of this bi-directional communication is written in the non-volatile memory.

#### 1. Using the adjusting remote commander

1) Connect the adjusting remote commander to the LANC terminal.
2) Adjust the HOLD switch of the adjusting remote commander to "HOLD" (SERVICE position).

If it has been properly connected, the LCD on the adjusting remote commander will display as shown in Fig. 5-1-7.

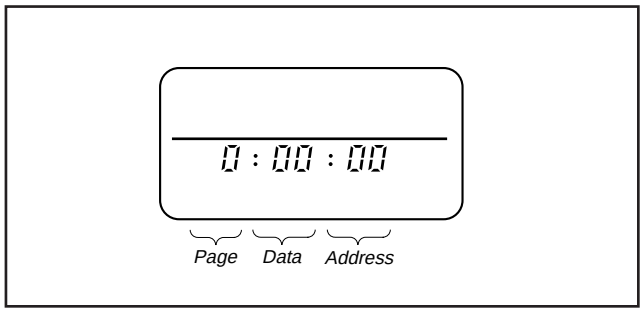


***Fig. 5-1-7.***

3) Operate the adjusting remote commander as follows.
   - Changing the page
     The page increases when the EDIT SEARCH+ button is pressed, and decreases when the EDIT SEARCH– button is pressed. There are altogether 16 pages, from 0 to F.

| Hexadecimal notation | 0 | 1 | 2 | 3 | 4 | 5 | 6 | 7 | 8 | 9 | A | B | C | D | E | F |
|---|---|---|---|---|---|---|---|---|---|---|---|---|---|---|---|---|
| LCD Display | 0 | 1 | 2 | 3 | 4 | 5 | 6 | 7 | 8 | 9 | A | b | c | d | E | F |
| Decimal notation conversion value | 0 | 1 | 2 | 3 | 4 | 5 | 6 | 7 | 8 | 9 | 10 | 11 | 12 | 13 | 14 | 15 |

***Table 5-1-1.***

   - Changing the address
     The address increases when the FF (▶▶) button is pressed, and decreases when the REW (◀◀) button is pressed. There are altogether 256 addresses, from 00 to FF.
   - Changing the data (Data setting)
     The data increases when the PLAY (►) button is pressed, and decreases when the STOP (■) button is pressed.
     There are altogether 256 data, from 00 to FF.
   - Writing the adjustment data
     The PAUSE button must be pressed to write the adjustment data (D, E, F page) in the nonvolatile memory.
     (The new adjustment data will not be recorded in the nonvolatile memory if this step is not performed.)
4) Select page: 0, address: 01, and set the data to 01, and enables Page D and E, F to be adjusted.
5) After completing all adjustments, set data: 00 to page: 0, address: 01 and turn off the main power supply (8.4V) once.

#### 2. Precautions upon using the adjusting remote commander

Mishandling of the adjusting remote commander may erase the correct adjustment data at times. To prevent this, it is recommended that all adjustment data be noted down before beginning adjustments and new adjustment data after each adjustment.

### 1-1-5. Data Processing

The calculation of the DDS display and the adjusting remote commander display data (hexadecimal notation) are required for obtaining the adjustment data of some adjustment items. In this case, after converting the hexadecimal notation to decimal notation, calculate and convert the result to hexadecimal notation, and use it as the adjustment data. Table 5-1-2. indicates the hexadecimal notation-the decimal notation calculation table.

**Hexadecimal notation-Decimal notation**

② ↓

| The lower digits of the hexadecimal notation / The upper digits of the hexadecimal notation | 0 | 1 | 2 | 3 | 4 | 5 | 6 | 7 | 8 | 9 | A (A) | B (b) | C (c) | D (d) | E (E) | F (F) |
|---|---|---|---|---|---|---|---|---|---|---|---|---|---|---|---|---|
| 0 | 0 | 1 | 2 | 3 | 4 | 5 | 6 | 7 | 8 | 9 | 10 | 11 | 12 | 13 | 14 | 15 |
| 1 | 16 | 17 | 18 | 19 | 20 | 21 | 22 | 23 | 24 | 25 | 26 | 27 | 28 | 29 | 30 | 31 |
| 2 | 32 | 33 | 34 | 35 | 36 | 37 | 38 | 39 | 40 | 41 | 42 | 43 | 44 | 45 | 46 | 47 |
| 3 | 48 | 49 | 50 | 51 | 52 | 53 | 54 | 55 | 56 | 57 | 58 | 59 | 60 | 61 | 62 | 63 |
| 4 | 64 | 65 | 66 | 67 | 68 | 69 | 70 | 71 | 72 | 73 | 74 | 75 | 76 | 77 | 78 | 79 |
| 5 | 80 | 81 | 82 | 83 | 84 | 85 | 86 | 87 | 88 | 89 | 90 | 91 | 92 | 93 | 94 | 95 |
| 6 | 96 | 97 | 98 | 99 | 100 | 101 | 102 | 103 | 104 | 105 | 106 | 107 | 108 | 109 | 110 | 111 |
| 7 | 112 | 113 | 114 | 115 | 116 | 117 | 118 | 119 | 120 | 121 | 122 | 123 | 124 | 125 | 126 | 127 |
| 8 | 128 | 129 | 130 | 131 | 132 | 133 | 134 | 135 | 136 | 137 | 138 | 139 | 140 | 141 | 142 | 143 |
| 9 | 144 | 145 | 146 | 147 | 148 | 149 | 150 | 151 | 152 | 153 | 154 | 155 | 156 | 157 | 158 | 159 |
| A (A) | 160 | 161 | 162 | 163 | 164 | 165 | 166 | 167 | 168 | 169 | 170 | 171 | 172 | 173 | 174 | 175 |
| ①→ B (b) | 176 | 177 | 178 | 179 | 180 | 181 | 182 | 183 | 184 | 185 | 186 | 187 | 188 | 189 | 190 | 191 |
| C (c) | 192 | 193 | 194 | 195 | 196 | 197 | 198 | 199 | 200 | 201 | 202 | 203 | 204 | 205 | 206 | 207 |
| D (d) | 208 | 209 | 210 | 211 | 212 | 213 | 214 | 215 | 216 | 217 | 218 | 219 | 220 | 221 | 222 | 223 |
| E (E) | 224 | 225 | 226 | 227 | 228 | 229 | 230 | 231 | 232 | 233 | 234 | 235 | 236 | 237 | 238 | 239 |
| F (F) | 240 | 241 | 242 | 243 | 244 | 245 | 246 | 247 | 248 | 249 | 250 | 251 | 252 | 253 | 254 | 255 |

**Note:** ( ) indicate the adjusting remote commander display.

**(Example)** In the case that the DDS display and the adjusting remote commander display are BD (bd).
As the upper digit of the hexadecimal notation is B (b), and the lower digit is D (d), the intersection "189" of the ① and ② in the above table is the decimal notation to be calculated.

***Table 5-1-2.***

## 1-2. INITIALIZATION OF D, E, F PAGE DATA

### 1. Initializing the D,E,F Page Data

**Note 1: If "Initializing the D, E, F Page Data" is performed, all data of the D page, E page and F page will be initialized. (It is impossible to initialize a single page.)**

**Note 2:** If the D,E,F page data has been initialized, "Modification of D, E, F Page Data" and all adjustments need to be performed again.

**Note 3:** < > : NTSC model (CCD-TRV75/TRV75PK/TRV715)
[ ] : PAL model (CCD-TRV3E/TRV13E/TRV23E/TRV45E/TRV55E/TRV65E/TRV69E)

| | |
|---|---|
| Adjusting page | D |
| Adjusting Address | 00 to 6F |
| Adjusting page | F |
| Adjusting Address | 00 to FF |
| Adjusting page | E |
| Adjusting Address | 00 to FF |

Initializing Method:

1) Select page: 0, address: 01, and set data: 01.
2) Select page: 2, address: 00, and set data: 55 <NTSC> or data : 51 [PAL].
3) Select page: 2, address: 01, set data: 55<NTSC> or data : 51 [PAL], and press the PAUSE button of the adjusting remote commander.
4) Select page: 2, address: 02, and check that the data is 01.
5) Select page: 3, address: 00, and set data: 29.
6) Select page: 3, address: 01, set data: 29, and press the PAUSE button of the adjusting remote commander.
7) Select page: 0, address: 01, and set data: 00.
8) Perform "Modification of D,E,F Page Data".

### 2. Modification of D, E, F Page Data

If the D, E, F page data has been initialized, change the data of the "Fixed data-2" address shown in the following tables by manual input.

Modifying Method:

1) Before changing the data, select page: 0, address: 01, and set data: 01.
2) New data for changing are not shown in the tables because they are different in destination. When changing the data, copy the data built in the same model.

**Note :** If copy the data built in the different model, the camcorder may not operate.

3) When changing the data, press the PAUSE button of the adjusting remote commander each time when setting new data to write the data in the non-volatile memory.
4) Check that the data of adjustment addresses is the initial value. If not, change the data to the inital value.
5) After compleating "Modification of D, E, F Paga Data" select page: 0, address: 01, and set data: 00. Also perform all adjustments.

### 3. D Page Table

**Note1 :**

Fixed data-1 : Initialized data.
(Refer to “1. Initializing the D,E,F Page Data”.)

Fixed data-2 : Modified data.
(Refer to “2. Modification of D, E, F Page Data”).

| Address | Initial Value | | Remark |
|---|---|---|---|
| | NTSC | PAL | |
| 00 to 0F | | | |
| 10 | 00 | 00 | Fixed data-1 (Initialized data) |
| 11 | 00 | 00 | |
| 12 | 00 | 00 | |
| 13 | | | Fixed data-2 (Modified data, copy the data built in the same model.) |
| 14 | | | |
| 15 | | | |
| 16 | | | |
| 17 | | | |
| 18 | | | |
| 19 | | | |
| 1A | | | |
| 1B | | | |
| 1C | | | |
| 1D | | | |
| 1E | | | |
| 1F | | | |
| 20 | | | |
| 21 | | | |
| 22 | | | |
| 23 | | | |
| 24 | | | |
| 25 | | | |
| 26 | | | |
| 27 | | | |
| 28 | | | |
| 29 | | | |
| 2A | | | Fixed data-1 (Initialized data) |
| 2B | | | |
| 2C | | | |
| 2D | | | |
| 2E | | | Fixed data-2 |
| 2F | | | |
| 30 | 88 | 88 | Battery end adj. |
| 31 | 8D | 8D | |
| 32 | A8 | A8 | |
| 33 | BD | BD | |
| 34 | C8 | C8 | |
| 35 | | | Fixed data-2 (Modified data, copy the data built in the same model.) |
| 36 | | | |
| 37 | | | |
| 38 | | | |
| 39 | | | |
| 3A | | | |
| 3B | | | |
| 3C | | | |
| 3D | | | |
| 3E | | | |
| 3F | | | |
| 40 | | | |
| 41 | | | |
| 42 | | | |
| 43 | | | |
| 44 | | | |
| 45 | | | |
| 46 | | | |
| 47 | | | |
| 48 | | | |
| 49 | | | |
| 4A | | | |

| Address | Initial Value | | Remark |
|---|---|---|---|
| | NTSC | PAL | |
| 4B | | | Fixed data-1 (Initialized data) |
| 4C | | | |
| 4D | | | |
| 4E | | | |
| 4F | | | |
| 50 | | | Fixed data-2 (Modified data, copy the data built in the same model.) |
| 51 | | | |
| 52 | | | |
| 53 | | | |
| 54 | | | |
| 55 | | | |
| 56 | | | |
| 57 | | | |
| 58 | | | |
| 59 | | | |
| 5A | | | |
| 5B | | | |
| 5C | | | |
| 5D | | | |
| 5E | | | |
| 5F | | | |
| 60 | | | Fixed data-1 (Initialized data) |
| 61 | | | |
| 62 | | | |
| 63 | | | |
| 64 | | | |
| 65 | | | |
| 66 | | | |
| 67 | | | |
| 68 | | | |
| 69 | | | |
| 6A | | | |
| 6B | | | |
| 6C | | | |
| 6D | | | |
| 6E | | | |
| 6F | | | |

**4. F Page table**

**Note 1:**

Fixed data-1 : Initialized data.
( Refer to "1. Initializing the D,E,F Page Data".)

Fixed data-2 : Modified data.
(Refer to "2. Modification of D, E, F Page Data").

**Note 2:** There are three models classified by CCD imager types as shown below, and the initial value of adjustment is different according to the model.

NTSC 760H model : CCD-TRV75/TRV75PK/TRV715
PAL 760H model : CCD-TRV45E/TRV55E/TRV65E/TRV69E
PAL 510H model : CCD-TRV3E/TRV13E/TRV23E

**Note 3 :** There are three models classified by VTR formats as shown below, and the initial value of adjustment is different according to the model.

NTSC Hi8 model : CCD-TRV75/TRV75PK/TRV715
PAL Hi8 model : CCD-TRV65E/TRV69E
PAL Standard8 model : CCD-TRV3E/TRV13E/TRV23E/ TRV45E/TRV55E

| Address | Initial Value | | Remark |
|---|---|---|---|
| | NTSC | PAL | |
| 00 to 0F | | | |
| 10 | 00 | 00 | Emergency memory address |
| 11 | 00 | 00 | |
| 12 | 00 | 00 | |
| 13 | 00 | 00 | |
| 14 | 00 | 00 | |
| 15 | 00 | 00 | |
| 16 | 00 | 00 | |
| 17 | 00 | 00 | |
| 18 | 00 | 00 | |
| 19 | 00 | 00 | |
| 1A | 00 | 00 | |
| 1B | 00 | 00 | |
| 1C | | | Fixed data-2 |
| 1D | | | |
| 1E | | | |
| 1F | | | |
| 20 | | | |
| 21 | D2 | <D2>, [D0] | G-CAM flip adj.<br>< > : CCD-TRV3E/TRV13E/TRV23E<br>[ ] : CCD-TRV45E/TRV55E/TRV65E/TRV69E |
| 22 | | | Fixed data-2 |
| 23 | | | |
| 24 | | | Fixed data-1 |
| 25 | | | (Color reproduction adj.) |
| 26 | | | Fixed data-2 |
| 27 | | | |
| 28 | | | |
| 29 | | | Fixed data-1 |
| 2A | | | |
| 2B | | | Fixed data-2 |
| 2C | A0 | A0 | 28MHz origin osc. adj. |
| 2D | | | Fixed data-2 |
| 2E | | | Fixed data-1 |
| 2F | 80 | 80 | Hall adj. |
| 30 | 80 | 80 | |
| 31 | 08 | 18/08 | Max gain adj.<br>Note 2 : 510H model/ 760H model |
| 32 | | | Fixed data-1 |
| 33 | | | |
| 34 | 1B | 1B | Color reproduction adj. |
| 35 | | | Fixed data-1 |
| 36 | 42 | 42 | Color reproduction adj. |
| 37 | | | Fixed data-1 |
| 38 | | | |
| 39 | | | |

| Address | Initial Value | | Remark |
|---|---|---|---|
| | NTSC | PAL | |
| 3A | 89 | 89 | Auto white balance adj. |
| 3B | 59 | 59 | |
| 3C | 38 | 38 | IRIS IN/OUT adj. |
| 3D | 41 | 41 | |
| 3E | 25 | 25 | Flange back adj. |
| 3F | 00 | 00 | |
| 40 | 19 | 19 | |
| 41 | 00 | 00 | |
| 42 | 35 | 35 | |
| 43 | 52 | 52 | Angular velocity sensor |
| 44 | 52 | 52 | sensitivity adj. |
| 45 | 7A | 7A | 1.5MHz deviation adj. |
| 46 | 8D | 8D | 1.7MHz deviation adj. |
| 47 | 7A | 7A | BPF f0 adj. |
| 48 | | | Fixed data-1 |
| 49 | 6B | 6B | Y OUT level adj. |
| 4A | 40 | 40 | AFC f0 adj. |
| 4B | 9A | 9A | C OUT level adj. |
| 4C | | | Fixed data-1 |
| 4D | 7B | 7B | Filter f0 adj. |
| 4E | 60 | 60 | RP filter f0 adj. |
| 4F | | | Fixed data-1 |
| 50 | | | |
| 51 | | | |
| 52 | | | |
| 53 | 40 | 40 | REC Y current adj. |
| 54 | 40 | 40 | ( Addresses 57 to 5A are fixed |
| 55 | 5F | 40 | data addresses. ) |
| 56 | 5F | 40 | Note 3 : Hi8 model/ Standard8 model |
| 57 | A0 | A1/80 | |
| 58 | 80 | 95/80 | |
| 59 | 90 | A1/80 | |
| 5A | 80 | 95/80 | |
| 5B | 50 | 50 | REC L level adj. |
| 5C | 50 | 50 | ( Addresses 63 to 64 are fixed |
| 5D | 43 | 50 | data addresses. ) |
| 5E | 43 | 50 | |
| 5F | 66 | 66 | |
| 60 | 66 | 66 | |
| 61 | 67 | 66 | |
| 62 | 67 | 66 | |
| 63 | 7C | 7A/80 | Note 3 : Hi8 model/ Standard8 model |
| 64 | 78 | 7A/80 | |
| 65 | 80 | 80 | REC C current adj. |
| 66 | 41 | 41 | IR video deviation Adj. |
| 67 | 33 | 33 | IR audio deviation Adj. |
| 68 | C7 | C7 | IR video carrier freq. Adj. |
| 69 | 3C | 3C | CAP FG offset adj. |
| 6A | | | Fixed data-2 |
| 6B | | | Fixed data-1 |
| 6C | | | |
| 6D | | | |
| 6E | | | |
| 6F | | | |
| 70 | 3B | 3B | AWB standard data input adj. |
| 71 | FF | FF | |
| 72 | 56 | 56 | |
| 73 | 7D | 7D | |
| 74 | | | Fixed data-1 |
| 75 | | | |
| 76 | 1B | 1B | Flange back adj. |
| 77 | 54 | 54 | |
| 78 | 25 | 25 | |
| 79 | 80 | 80 | |
| 7A | 10 | 10 | |
| 7B | FF | FF | |

| Address | Initial Value | | Remark |
|---|---|---|---|
| | NTSC | PAL | |
| 7C | 0A | 0A | Switching position adj. |
| 7D | 00 | 00 | |
| 7E | 0A | 0A | |
| 7F | 00 | 00 | |
| 80 | | | Fixed data-2 |
| 81 | | | |
| 82 | | | Fixed data-1 |
| 83 | | | |
| 84 | | | Fixed data-2 |
| 85 | | | Fixed data-1 |
| 86 | | | Fixed data-2 |
| 87 | | | Fixed data-1 |
| 88 | | | |
| 89 | | | |
| 8A | | | |
| 8B | | | |
| 8C | | | |
| 8D | | | |
| 8E | | | Fixed data-2 |
| 8F | | | Fixed data-1 |
| 90 | | | |
| 91 | | | |
| 92 | | | |
| 93 | | | |
| 94 | | | Fixed data-2 |
| 95 | | | |
| 96 | | | Fixed data-1 |
| 97 | | | |
| 98 | | | Fixed data-2 |
| 99 | | | Fixed data-1 |
| 9A | | | Fixed data-2 |
| 9B | | | Fixed data-1 |
| 9C | | | Fixed data-2 |
| 9D | | | Fixed data-1 |
| 9E | | | Fixed data-2 |
| 9F | | | Fixed data-1 |
| A0 | | | Fixed data-2 |
| A1 | | | |
| A2 | | | |
| A3 | | | |
| A4 | | | |
| A5 | | | Fixed data-1 |
| A6 | | | Fixed data-2 |
| A7 | | | |
| A8 | | | |
| A9 | | | |
| AA | | | Fixed data-1 |
| AB | | | |
| AC | | | Fixed data-2 |
| AD | | | Fixed data-1 |
| AE | | | Fixed data-2 |
| AF | | | Fixed data-1 |
| B0 | | | |
| B1 | | | |
| B2 | | | |
| B3 | | | |
| B4 | | | |
| B5 | | | |
| B6 | | | |
| B7 | | | |
| B8 | | | |
| B9 | | | |
| BA | | | |
| BB | | | |
| BC | | | |
| BD | | | |

| Address | Initial Value | | Remark |
|---|---|---|---|
| | NTSC | PAL | |
| BE | | | Fixed data-2 |
| BF | | | |
| C0 | | | Fixed data-1 |
| C1 | | | |
| C2 | | | |
| C3 | | | |
| C4 | | | |
| C5 | | | Fixed data-2 |
| C6 | | | Fixed data-1 |
| C7 | | | |
| C8 | | | Fixed data-2 |
| C9 | | | |
| CA | | | Fixed data-1 |
| CB | | | |
| CC | | | |
| CD | | | |
| CE | | | |
| CF | | | |
| D0 | | | |
| D1 | | | |
| D2 | | | |
| D3 | | | |
| D4 | | | |
| D5 | | | |
| D6 | | | |
| D7 | | | |
| D8 | | | |
| D9 | | | Fixed data-2 |
| DA | | | Fixed data-1 |
| DB | | | |
| DC | | | Fixed data-2 |
| DD | | | Fixed data-1 |
| DE | | | |
| DF | | | |
| E0 | | | |
| E1 | | | |
| E2 | | | |
| E3 | | | Fixed data-2 |
| E4 | | | |
| E5 | | | Fixed data-1 |
| E6 | | | Fixed data-2 |
| E7 | | | Fixed data-1 |
| E8 | | | |
| E9 | | | |
| EA | | | |
| EB | | | Fixed data-2 |
| EC | | | |
| ED | | | Fixed data-1 |
| EE | | | |
| EF | | | |
| F0 | | | |
| F1 | | | |
| F2 | | | Fixed data-2 |
| F3 | | | Fixed data-1 |
| F4 | | | |
| F5 | FF | FF | Color reproduction adj. |
| F6 | F6 | F4 | |
| F7 | | | Fixed data-1 |
| F8 | | | |
| F9 | | | |
| FA | | | |
| FB | | | |
| FC | | | |
| FD | | | |
| FE | | | |
| FF | | | |

**5. E Page Table**

**Note 1:**

Fixed data-1 : Initialized data.
( Refer to “1. Initializing the D,E,F Page Data”.)

Fixed data-2 : Modified data.
(Refer to “2. Modification of D, E, F Page Data”).

**Note 2:** See “1-5. LCD SYSTEM ADJUSTMENT”.

| Address | Initial Value | | Remark |
|---|---|---|---|
| | NTSC | PAL | |
| 00 | | | Fixed data-1 |
| 01 | | | |
| 02 | | | |
| 03 | | | |
| 04 | | | |
| 05 | | | |
| 06 | | | |
| 07 | | | |
| 08 | | | |
| 09 | | | |
| 0A | | | |
| 0B | | | |
| 0C | | | |
| 0D | | | |
| 0E | | | |
| 0F | | | |
| 10 | | | |
| 11 | | | |
| 12 | | | |
| 13 | | | |
| 14 | | | Fixed data-2 |
| 15 | | | Fixed data-1 |
| 16 | | | |
| 17 | | | |
| 18 | | | |
| 19 | | | |
| 1A | | | |
| 1B | | | |
| 1C | | | |
| 1D | | | |
| 1E | | | |
| 1F | | | |
| 20 | | | |
| 21 | | | |
| 22 | | | |
| 23 | | | |
| 24 | | | |
| 25 | | | |
| 26 | | | |
| 27 | | | |
| 28 | | | |
| 29 | | | |
| 2A | | | |
| 2B | | | Fixed data-2 |
| 2C | | | |
| 2D | | | |
| 2E | | | |
| 2F | | | Fixed data-1 |
| 30 | | | |
| 31 | | | |
| 32 | | | |
| 33 | | | |
| 34 | | | |
| 35 | | | |
| 36 | | | |
| 37 | | | |
| 38 | | | Fixed data-2 |
| 39 | | | |
| 3A | | | |
| 3B | | | Fixed data-1 |
| 3C | | | |
| 3D | | | |
| 3E | | | |
| 3F | | | |
| 40 | | | |
| 41 | | | |
| 42 | | | |
| 43 | | | |
| 44 | | | |
| 45 | | | |
| 46 | | | |
| 47 | | | |
| 48 | | | |
| 49 | | | |
| 4A | | | |
| 4B | | | |
| 4C | | | |
| 4D | | | |
| 4E | | | |
| 4F | | | Fixed data-2 |
| 50 | | | Fixed data-1 |
| 51 | | | Fixed data-2 |
| 52 | | | |
| 53 | | | Fixed data-1 |
| 54 | | | |
| 55 | | | |
| 56 | | | |
| 57 | | | |
| 58 | | | |
| 59 | | | Fixed data-2 |
| 5A | | | |
| 5B | | | Fixed data-1 |
| 5C | | | Fixed data-2 |
| 5D | | | Fixed data-1 |
| 5E | | | |
| 5F | | | |
| 60 | | | Fixed data-2 |
| 61 | | | |
| 62 | | | |
| 63 | | | |
| 64 | | | |
| 65 | | | |
| 66 | | | |
| 67 | | | |
| 68 | | | Fixed data-1 |
| 69 | | | |
| 6A | | | |
| 6B | | | Fixed data-2 |
| 6C | | | |
| 6D | | | Fixed data-1 |
| 6E | | | Fixed data-2 |
| 6F | | | |
| 70 | | | |
| 71 | | | |
| 72 | | | Fixed data-1 |
| 73 | | | Fixed data-2 |
| 74 | | | Fixed data-1 |
| 75 | | | Fixed data-2 |
| 76 to 99 | | | Fixed data-1 |

| Address | Initial Value | | Remark |
|---|---|---|---|
| | NTSC | PAL | |
| 9A | | | Fixed data-2 |
| 9B | | | Fixed data-1 |
| 9C | | | Fixed data-2 |
| 9D | | | Fixed data-1 |
| 9E | | | |
| 9F | | | |
| A0 | | | Fixed data-2 |
| A1 | | | |
| A2 | | | |
| A3 | | | |
| A4 | | | Fixed data-1 |
| A5 | | | |
| A6 | | | |
| A7 | | | |
| A8 | | | |
| A9 | | | |
| AA | | | |
| AB | | | |
| AC | | | |
| AD | | | |
| AE | | | |
| AF | | | |
| B0 | | | |
| B1 | | | |
| B2 | | | |
| B3 | | | |
| B4 | | | |
| B5 | | | |
| B6 | | | |
| B7 | | | |
| B8 | | | |
| B9 | | | |
| BA | | | |
| BB | | | |
| BC | | | Fixed data-2 |
| BD | | | |
| BE | | | |
| BF | Note2 | Note2 | Fixed data (NTSC model)<br>VCO adj. (LCD) (PAL model) |
| C0 | | | Fixed data-2 |
| C1 | | | |
| C2 | | | Fixed data-1 |
| C3 | | | |
| C4 | | | |
| C5 | | | |
| C6 | | | |
| C7 | | | Fixed data-2 |
| C8 | | | |
| C9 | | | |
| CA | | | |
| CB | | | |
| CC | | | Fixed data-1 |
| CD | | | |
| CE | | | |
| CF | Note 2 | Note2 | Bright adj. (LCD) |
| D0 | Note 2 | Note2 | Color adj. (LCD) |
| D1 | Note 2 | Note2 | White balance adj. (LCD) |
| D2 | Note 2 | Note2 | White balance adj. (LCD) |
| D3 | Note 2 | Note2 | Contrast adj. (LCD) |
| D4 | Note 2 | Note2 | D range adj. (LCD) |
| D5 | Note 2 | Note2 | V-COM level adj. (LCD) |
| D6 | Note 2 | Note2 | VCO adj. (LCD) |
| D7 | Note 2 | Note2 | V-COM adj. (LCD) |
| D8 | | | Fixed data-1 |

| Address | Initial Value | | Remark |
|---|---|---|---|
| | NTSC | PAL | |
| D9 | Note 2 | Note2 | Fixed data (NTSC model)<br>Color adj. (LCD) (PAL model) |
| DA | | | Fixed data-1 |
| DB | | | Fixed data-2 |
| DC | | | Fixed data-1 |
| DD | | | |
| DE | | | |
| DF | | | |
| E0 | | | |
| E1 | | | |
| E2 | | | |
| E3 | | | |
| E4 | | | |
| E5 | | | |
| E6 | | | |
| E7 | | | |
| E8 | | | |
| E9 | | | |
| EA | | | Fixed data-2 |
| EB | | | |
| EC | | | Fixed data-1 |
| ED | | | |
| EE | | | |
| EF | | | Fixed data-2 |
| F0 | | | Fixed data-1 |
| F1 | | | |
| F2 | | | |
| F3 | | | Fixed data-2 |
| F4 | | | Fixed data-1 |
| F5 | | | |
| F6 | | | |
| F7 | | | |
| F8 | | | |
| F9 | | | |
| FA | | | |
| FB | | | |
| FC to FF | | | |

## 1-3. CAMERA SYSTEM ADJUSTMENTS

Before perform the camera system adjustments, Check that the specified value of "28MHz Origin Oscillation Adjustment", "Y OUT level Adjustment" and "C OUT level Adjustment" of "VIDEO SYSTEM ADJUSTMENT" are satisfied.

### 1. G-CAM flip Adjustment

Set the color reproduction conditions to optimum.

| | |
|---|---|
| Subject | Color bar chart standard picture frame |
| Measurement Point | Display data of page 1 of the adjusting remote commander (Note 1) |
| Measuring Instrument | |
| Adjustment Page | F |
| Adjustment Address | 21 |

**Note 1.** Displayed data of page 1 of the adjusting remote commander.

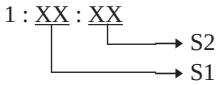


**Note 2.** [ ] : Except CCD-TRV3E/TRV13E/TRV23E
< > : CCD-TRV3E/TRV13E/TRV23E

Adjusting method:

1) Select page: 0, address: 01, and set data: 01.
2) Select page: 0, address: 03, and set data: 16.
3) Select page: F, address: 21, set data: [D2] <D0>, and press the PAUSE button of the adjusting remote commander.
4) Select page 1 of the adjusting remote commander, and compare the higher 2 digits (S1) and lower 2 digits (S2) of the 4-degits display data.
   When S1<S2
   Perform steps 5) onwards.
   When S1≧S2
   Perform steps "Processing after Completing Adjustments".
5) Select page: F, address: 21, set data: [52] <50>, and press the PAUSE button of the adjusting remote commander.

Processing after Completing Adjustments

1) Select page: 0, address: 03, and set data: 00.
2) Select page: 0, address: 01, and set data: 00.

## 2. HALL Adjustment

For detecting the position of the lens iris, adjust the hall AMP gain and offset.

| | |
|---|---|
| Subject | Not required |
| Measurement Point | DDS display data of LCD or TV monitor (Note 3) |
| Measuring Instrument | |
| Adjustment Page | F |
| Adjustment Address | 2F, 30 |
| Specified Value | 90 to 94 during IRIS OPEN (Note 1)<br>19 to 1D during IRIS CLOSE (Note 2) |

**Note 1:** Select page: 2, address: 01, set data: 01, and press the PAUSE button of the adjusting remote commander.

**Note 2:** Select page: 2, address: 01, set data: 03, and press the PAUSE button of the adjusting remote commander.

**Note 3:** DDS display data of LCD or TV monitor.

00 00XX → Object data

Adjusting method:

1) Select page: 0, address: 01, and set data: 01.
2) Select page: 0, address: 03, and set data: 03.
3) Select page: D, address: 11, set data: 02, and press the PAUSE button of the adjusting remote commander.
4) Select page: 2, address: 01, set data: 03, and press the PAUSE button.
5) Select page: F, address: 30, set data: 80, and press the PAUSE button.
6) Select page: F, address: 2F, set data: 40, and press the PAUSE button.
7) Read the DDS display data (the bottom two digits of the display data at the bottom right of the LCD display or the TV monitor), and this data is named $K_2$.
8) Select page: F, address: 2F, set data: 30, and press the PAUSE button.
9) Read the DDS display data, and this data is named $K_1$.
10) Select page: 2, address: 01, set data: 01, and press the PAUSE button.
11) Read the DDS display data, and this data is named $W_1$.
12) Select page: F, address: 2F, set data: 40, and press the PAUSE button.
13) Read the DDS display data, and this data is named $W_2$.
14) Convert $W_1$, $W_2$, $K_1$, $K_2$, to decimal notation, and obtain $W_1'$ , $W_2'$ , $K_1'$ , $K_2'$. (Refer to Table 5-1-2. “Hexadecimal notation - decimal notation conversion table”.)
15) Calculate $X_1'$ using the following equations (decimal notation calculation).

$A' = W_2' + K_1' - W_1' - K_2'$ Equation 1

$B' = W_1' - K_1'$ Equation 2

$X_1' = [1904 + (48 \times A') - (16 \times B')] / A'$ Equation 3

16) Convert $X_1'$ to hexadecimal notation, and obtain $X_1$. (Round off to one decimal place)
17) Select page: F, address: 2F, set data: $X_1$, and press the PAUSE button.
18) Select page: 2, address: 01, and set data: 01, and press the PAUSE button.
19) Select page: F, address: 30, change the data and adjust the DDS display data to “92”.
20) Press the PAUSE button of the adjusting remote commander.
21) Select page: 2, address: 01, and set data: 03, and press the PAUSE button.
22) Read the DDS display data, and this data is named $K_0$. If $K_0$ lies within the “19” to “1D” range, perform “Processing after completing adjustments”. If it is lies outside the range, perform the following adjustments.
23) Convert $K_0$ to decimal notation, and obtain $K_0'$.
24) Calculate $X_2'$ using the following equations (decimal notation calculation).

$C' = 146 - B' - K_0'$ Equation 4

$X_2' = [(119 - B') \times (X_1' - 48) + (48 \times C')] / C'$ Equation 5

( $X_1'$ and $B'$ are values obtained from equations 2) and 3) )

25) Convert $X_2'$ to hexadecimal notation, and obtain $X_2$. (Round off to one decimal place)
26) Select page: F, address: 2F, set data: $X_2$, and press the PAUSE button.
27) Select page: 2, address: 01, set data: 03, and press the PAUSE button.
28) Select page: F, address: 30, change the data and adjust the DDS display data to “1B”.
29) Press the PAUSE button of the adjusting remote commander.
30) Select page: 2, address: 01, set data: 01, and press the PAUSE button.
31) Check the DDS display data lies within the “90” to “94” range.

Processing after Completing Adjustments

1) Select page: D, address: 11, and set data: 00, and press the PAUSE button.
2) Select page: 0, address: 01, and set data: 00.
3) Select page: 2, address: 01, and set data: 00, and press the PAUSE button.
4) Select page: 0, address: 03, and set data: 00.

### 3. Flange Back Adjustment

The inner focus lens flange back adjustment is carried out automatically. In whichever case, the focus will be deviated during auto focusing/manual focusing.

### 3-1. Flange Back Adjustment(1)

| | |
|---|---|
| Subject | Flange back adjustment chart<br>(2.0 m from the front of the lens)<br>(Luminance: 300 ± 50 lux) |
| Measurement Point | Check operation on TV monitor |
| Measuring Instrument | |
| Adjustment Page | F |
| Adjustment Address | 3E to 42, 76 to 7B |

Switch setting:

1) NIGHT SHOT switch ..... OFF

Adjusting method:

1) Check that at both the zoom lens TELE end and WIDE end, the center of the chart for the flange back adjustment and center of the exposure screen coincide.
2) Select page: 0, address: 01, and set data: 01.
3) Check that the data of page: F, address: 3E to 42, 76 to 7B is the initial value (See table below).

| Address | Data | Address | Data |
|---|---|---|---|
| 3E | 25 | 77 | 54 |
| 3F | 00 | 78 | 25 |
| 40 | 19 | 79 | 80 |
| 41 | 00 | 7A | 10 |
| 42 | 35 | 7B | FF |
| 76 | 1B | | |

4) Select page: 2, address: 02, and check that the data is “00 “.
5) Select page: 2, address: 01, set data: 13, and press the PAUSE button of the adjusting remote commander.
6) Select page: 2, address: 01, set data: 15, and press the PAUSE button of the adjusting remote commander.
   (The adjustment data will be automatically input to page: F, addresses: 3E to 42, 76 to 7B.)
7) Select page: 2, address: 02, and check that the data is „01“.

Processing after Completing Adjustments

1) Turn OFF the main power supply (8.4V).
2) Perform “Flange Adjustment (2)”.

### 3-2. Flange Back Adjustment (2)

Perform this adjustment after performing “Flange Back Adjustment (1)”.

| | |
|---|---|
| Subject | Subject more than 500m away<br>(Subjects with clear contrast such as buildings, etc.) |
| Measurement Point | Check operation on TV monitor |
| Measuring Instrument | |
| Adjustment Page | F |
| Adjustment Address | 3E to 42, 76 to 7B |

Switch setting:

1) NIGHT SHOT switch ..... OFF

Adjusting method:

1) Set the zoom lens to the TELE end and expose a subject that is more than 500 m away (subject with clear contrast such as building, etc.). (Nearby subjects less than 500 m away should not be in the screen.)
2) Select page: 0, address: 01, and set data: 01.
3) Select page: 2, address: 02, and check that the data is “00”.
4) Select page: 2, address: 01, set data: 13, and press the PAUSE button of the adjusting remote commander.
5) Place a ND filter on the lens so that the optimum image is obtain.
6) Select page: 2, address: 01, set data: 29, and press the PAUSE button of the adjusting remote commander.
   (The adjustment data will be automatically input to page: F, addresses: 3E to 42, 76 to 7B.)
7) Select page: 2, address: 02, and check that the data is “01”.

Processing after Completing Adjustments

1) Select page: 0, address: 01, and set data: 00.
2) Turn OFF the main power supply (8.4V).
3) Perform “Flange Back Check”.

### 4. Flange Back Check

| | |
|---|---|
| Subject | Siemens star<br>(2.0 m from the front of the lens)<br>(Luminance: approx. 200 lux) |
| Measurement Point | Check operation on TV monitor |
| Measuring Instrument | |
| Adjustment Page | F |
| Adjustment Address | 3E to 42, 76 to 7B |

Switch setting:

1) NIGHT SHOT switch ..... OFF

Checking method:

1) Place the Siemens star 2.0m from the front of the lens.
2) To open the IRIS, decrease the luminous intensity to the Siemens star up to a point before noise appear on the image.
3) Select page: 2, address: 40, and set data: 02.
4) Select page: 2, address: 41, and set data: 01.
5) Shoot the Siemens star with the zoom TELE end.
6) Turn on the auto focus.
7) Check that the lens is focused (Note1).
8) Select page: 2, address: 21, and set data: 10.
9) Shoot the Siemens star with the zoom WIDE end.
10) Observe the TV monitor and check that the lens is focused.

**Note 1:** When the auto focus is ON, the lens can be checked if it is focused or not by observing the data on the page 1 of the adjusting remote commander.

1) Select page: 0, address: 03, and set data: 0F.
2) Page 1 shows the state of the focus.

1 : 00 : XX → Odd: Focused
Even: Unfocused

Processing after Completing Adjustments

1) Select page: 2, address: 21, and set data: 00.
2) Select page: 0, address: 03, and set data: 00.
3) Select page: 2, address: 40, and set data: 00.
4) Select page: 2, address: 41, and set data: 00.

### 5. Picture Frame Setting

| | |
|---|---|
| Subject | Color bar chart standard picture frame<br>(1.5m from the front of the lens) |
| Measurement Point | Video output terminal |
| Measuring Instrument | Oscilloscope and TV monitor |
| Specified Value | A=B, C=D, t=0 ± 0.1msec |

Setting method:

1) Adjust the zoom and the camera direction, and set to the specified position.
2) Mark the position of the picture frame on the monitor display, and adjust the picture frame to this position in following adjustments using “Color bar chart standard picture frame”.

1. Horizontal period

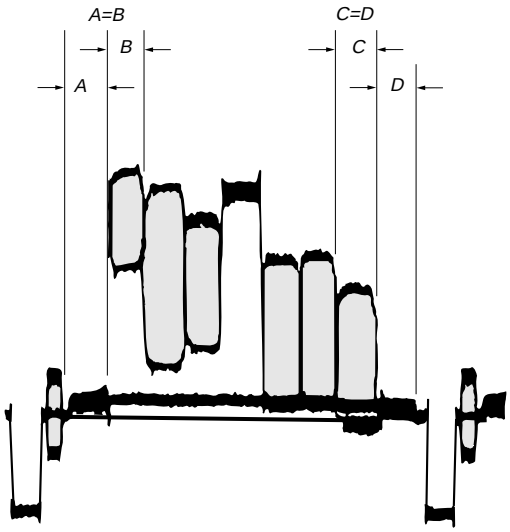


2. Vertical period

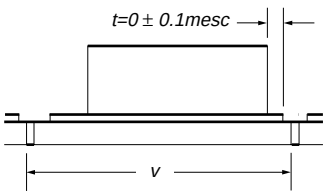


***Fig. 5-1-8.***

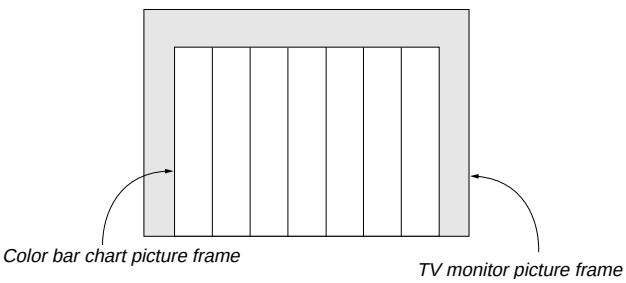


***Fig. 5-1-9.***

### 6. Color Reproduction Adjustment

Adjust the color Separation matrix coefficient so that proper color reproduction is produced.

| | |
|---|---|
| Subject | Color bar chart standard picture frame |
| Measurement Point | Video output terminal |
| Measuring Instrument | Vectorscope |
| Adjustment Page | F |
| Adjustment Address | 34, 36, F5, F6 |
| Specified Value | All color luminance points should settle within each color reproduction frame. |

**Note1:** NTSC 760H model (CCD-TRV75/TRV75PK/TRV715)
PAL 510H model (CCD-TRV3E/TRV13E/TRV23E)
PAL 760H model (CCD-TRV45E/TRV55E/TRV65E/TRV69E)

Switch setting:

1) NIGHT SHOT switch..... OFF

Adjusting method:

1) Select page: 0, address: 01, and set data: 01.
2) Select page: 2, address: 01, set data: 3D, and press the PAUSE button of the adjusting remote commander.
3) Select page: F, address: 25, set data: 3F, and press the PAUSE button of the adjusting remote commander.
4) Adjust the GAIN and PHASE of the vectorscope, and adjust the burst luminance point to the burst position of the color reproduction frame.
5) Change the data of page: F, address: 34, 36, F5 and F6, and settle each color luminance point in each color reproduction frame.

**Note 2:** Be sure to press the PAUSE button of the adjusting remote commander before changing the addresses. If not, the new data will not be written to the memory.

6) Press the PAUSE button of the adjusting remote commander.

Processing after Completing Adjustments

1) Select page: 2, address: 01, and set data: 00, and press the PAUSE button of the adjusting remote commander.
2) Select page: 0, address: 01, and set data: 00.

*For NTSC 760H model*

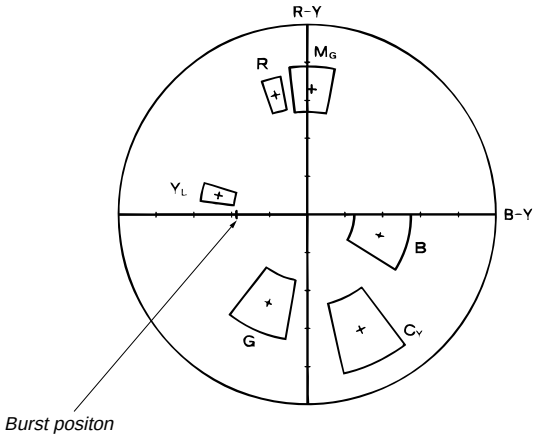


*For PAL 510H/PAL 760H model*

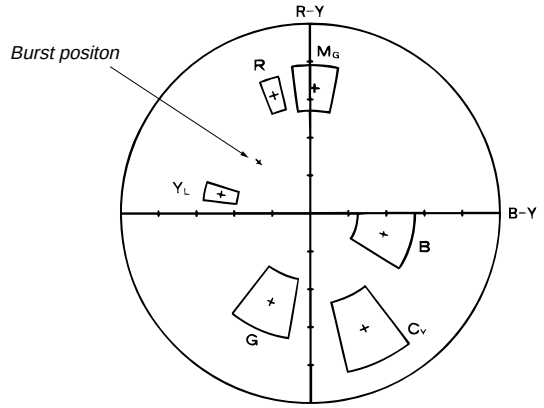


***Fig. 5-1-10.***

### 7. IRIS IN/OUT Adjustment

For the unit to judge if the white balance is indoors or outdoors in auto white balance operations, measure the light level and write it in the EEPROM.
If the level is not correct, the white balance will not be accurate.

| Subject | Clear chart (Color bar standard picture frame) |
|---|---|
| Measurement Point | DDS display of LCD or TV monitor (Note 1) |
| Measuring Instrument | |
| Adjustment Page | F |
| Adjustment Address | 3C, 3D |

**Note 1:** The right four digits of the display data at the right bottom side of the LCD and TV monitor is the LIGHT LEVEL data.

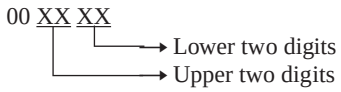


Switch setting:
1) STEADY SHOT (Menu display) ..... OFF
2) NIGHT SHOT switch ..... OFF

Adjusting method:
1) Select page: 0, address: 01, and set data: 01.
2) Select page: 0, address: 03, and set data: 06.
3) Select page: D, address: 11, and set data: 02, and press the PAUSE button of the adjusting remote commander.
4) Select page: 2, address: 40, and set data: 02.
5) Select page: 2, address: 01, set data: 0B, and press the PAUSE button of the adjusting remote commander.
6) Read the DDS display data (Note 1), and take the upper two digits as $D_1$ and the lower two as $D_2$.
7) Convert $D_1$ to decimal notation, and obtain $D_1'$. (Refer to Table 5-1-2. “Hexadecimal notation - decimal notation conversion table” of “Service mode”.)
8) Calculate $D_3'$ using the following equations. (Equations 1 and 2 are for decimal notation calculation).
   When $D_2 \geqq D0$
   $D_3' = D_1' - 21$ ..... Equation 1
   When $D_2 < D0$
   $D_3' = D_1' - 22$ ..... Equation 2
9) Convert $D_3'$ to hexadecimal notation, and obtain $D_3$.
10) Select page: F, address: 3C, set data: $D_3$, and press the PAUSE button of the adjusting remote commander.
11) Select page: 2, address: 01, set data: 09, and press the PAUSE button of the adjusting remote commander.
12) Read the DDS display data (Note 1), and take the upper two digits as $D_4$ and the lower two as $D_5$.
13) Convert $D_4$ to decimal notation, and obtain $D_4'$. (Refer to Table 5-1-2. “Hexadecimal notation - decimal notation conversion table”.)
14) Calculate $D_6'$ using the following equations. (Equations 3 and 4 are for decimal notation calculation).
   When $D_5 \geqq F0$
   $D_6' = D_4' - 13$ ..... Equation 3
   When $D_5 < F0$
   $D_6' = D_4' - 14$ ..... Equation 4
15) Convert $D_6'$ to hexadecimal notation, and obtain $D_6$.
16) Select page: F, address: 3D, set data: $D_6$, and press the PAUSE button of the adjusting remote commander.

Processing after Completing Adjustments
1) Select page: D, address: 11, and set data: 00, and press the PAUSE button of the adjusting remote commander.
2) Select page: 0, address: 01, and set data: 00.
3) Select page: 2, address: 01, and set data: 00, and press the PAUSE button of the adjusting remote commander.
4) Select page: 2, address: 40, and set data: 00.
5) Select page: 0, address: 03, and set data: 00.

### 8. MAX GAIN Adjustment

Setting the minimum illumination.
If it is not consistent, the image level required for taking subjects in low illuminance will not be produced (dark).

| Subject | Clear chart (Color bar standard picture frame) |
|---|---|
| Measurement Point | DDS display of LCD or TV monitor (Note 1) |
| Measuring Instrument | |
| Adjustment Page | F |
| Adjustment Address | 31 |
| Specified Value | C0 to FF |

**Note 1:** The right two digits of the display data at the right bottom side of the LCD and TV monitor is the object data.




**Note 2:** NTSC 760H model (CCD-TRV75/TRV75PK/TRV715)
PAL 510H model (CCD-TRV3E/TRV13E/TRV23E)
PAL 760H model (CCD-TRV45E/TRV55E/TRV65E/TRV69E)

Switch setting:
1) STEADY SHOT (Menu display) ..... OFF
2) NIGHT SHOT switch ..... OFF

Adjusting method:
1) Select page: 0, address: 01, and set data: 01.
2) Select page: D, address: 11, and set data: 02, and press the PAUSE button of the adjusting remote commander.
3) Select of page: 0, address: 03, and set data: 01.
4) Select page: 2, address: 40, and set data: 02.
5) Select page: 2, address: 56, and set data: 40.
6) Select page: 2, address: 01, set data: 19, and press the PAUSE button of the adjusting remote commander.
7) Select page: F, address: 31, set data: [18] <08>, and press the PAUSE button of the adjusting remote commander.
   Note : [ ] : 510H model
   < > : 760H model
8) Check that the DDS display data (Note 1) lies within the specified value.

Processing after Completing Adjustments
1) Select page: D, address: 11, and set data: 00, and press the PAUSE button of the adjusting remote commander.
2) Select page: 0, address: 01, and set data: 00.
3) Select page: 2, address: 01, and set data: 00, and press the PAUSE button of the adjusting remote commander.
4) Select page: 2, address: 40, and set data: 00.
5) Select page: 2, address: 56, and set data: 00.
6) Select page: 0, address: 03, and set data: 00.

### 9. Auto White Balance Standard Data Input

| | |
|---|---|
| Subject | Clear chart<br>(Color bar standard picture frame) |
| Adjustment Page | F |
| Adjustment Address | 70 to 73 |

**Note 1:** Perform "Color Reproduction Adjustment" before this adjustment.

**Note 2:** Check that the data of page: 2, address: 02 is 00. If not, turn the power of the unit OFF/ON.

Switch setting:

1) NIGHT SHOT switch ..... OFF

Adjusting method:

1) Select page: 0, address: 01, and set data: 01.
2) Wait for 2 seconds.
3) Select page: 2, address: 01, and set data: 11, and press the PAUSE button of the adjusting remote commander.
4) Select page: 2, address: 01, and set data: 0D, and press the PAUSE button of the adjusting remote commander.
   (When the standard data is take in, the data will be automatically input to page: F, address: 70 to 73.)
5) Select page: 2, address: 02, and check that the data is "01".
6) Perform "Auto White Balance Adjustment".

Processing after Completing Adjustments

1) Select page: 2, address: 01, and set data: 00, and press the PAUSE button of the adjusting remote commander.
2) Select page: 0, address: 01, and set data: 00.

### 10. Auto White Balance Adjustment

Adjust to the proper auto white balance output data.
If it is not correct, auto white balance and color reproducibility will be poor.

| | |
|---|---|
| Subject | Clear chart<br>(Color bar standard picture frame) |
| Filter | Filter C14 for color temperature correction |
| Measurement Point | DDS display of LCD or TV monitor (Note 1) |
| Measuring Instrument | |
| Adjustment Page | F |
| Adjustment Address | 3A, 3B |
| Specified Value | R ratio: 2B40 to 2BC0<br>B ratio: 5E40 to 5EC0 |

**Note 1:** Perform "Auto White Balance Standard Data Input" before this adjustment.

**Note 2:** The right four digits of the display data at the right bottom side of the LCD and TV monitor is the object data.

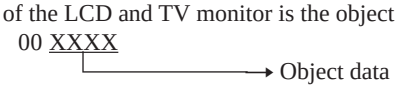


Switch setting:

1) NIGHT SHOT switch ..... OFF

Adjusting method:

1) Place the C14 filter for color temperature correction on the lens.
2) Select page: 0, address: 01, and set data: 01.
3) Select page: D, address: 11, and set data: 02, and press the PAUSE button of the adjusting remote commander.
4) Select page: 2, address: 01, and set data: 3F, and press the PAUSE button of the adjusting remote commander.
5) Select page: 0, address: 03, and set data: 04.
6) Select page: F, address: 3A, and change the data, and adjust the average value of the DDS display data(Note 2) to the R ratio specified value.
7) Press the PAUSE button of the adjusting remote commander.
8) Select page: 0, address: 03, and set data: 05.
9) Select page: F, address: 3B, and change the data, and adjust the average value of the DDS display data(Note 2) to the B ratio specified value.
10) Press the PAUSE button of the adjusting remote commander.

Processing after Completing Adjustments

1) Select page: D, address: 11, and set data: 00, and press the PAUSE button of the adjusting remote commander.
2) Select page: 0, address: 01, and set data: 00.
3) Select page: 2, address: 01, and set data: 00, and press the PAUSE button of the adjusting remote commander.
4) Select page: 0, address: 03, and set data: 00.

### 11. White Balance Check

| | |
|---|---|
| Subject | Clear chart<br>(Color bar standard picture frame) |
| Filter | Filter C14 for color temperature correction<br>ND filter 1.0 and 0.3 |
| Measurement Point | video output terminal |
| Measuring Instrument | Vectorscope |
| Specified Value | Fig. 5-1-11. A to C |

Switch setting:

1) NIGHT SHOT switch ..... OFF

Checking method:

1) Check that the lens is not covered with either filter.
2) Select page: 2, address: 01, set data: 0F, and press the PAUSE button of the adjusting remote commander.
3) Check that the center of the white luminance point is within the circle shown Fig. 5-1-11.A.
4) Select page: 2, address: 01, set data: 00, and press the PAUSE button of the adjusting remote commander.
5) Select page: 2, address: 01, set data: 23, and press the PAUSE button of the adjusting remote commander.
6) Place the C14 filter on the lens.
7) Check that the center of the white luminance point settles in the circle shown Fig. 5-1-11.B.
8) Remove the C14 filter, and place the ND filter 1.3 (1.0 +0.3) on the lens.
9) Check that the white luminance point stopped moving, and then remove the ND filter 1.3.
10) Check that the center of the white luminance point settles within the circle shown Fig. 5-1-11.C.

Processing after Completing Adjustments

1) Select page: 2, address: 01, and set data: 00, and press the PAUSE button of the adjusting remote commander.

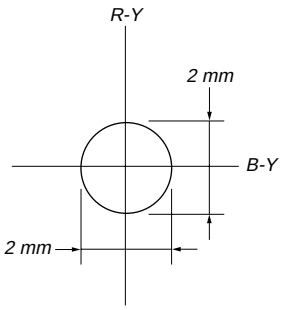


***Fig.5-1-11. A***

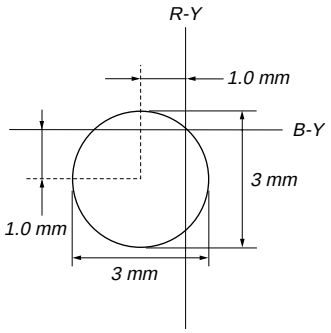


***Fig.5-1-11. B***

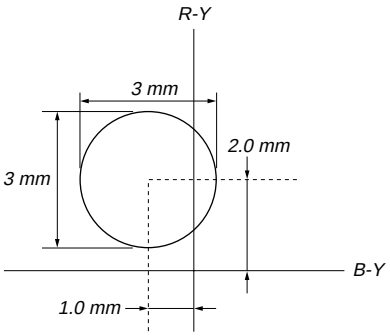


***Fig.5-1-11. C***

### 12. Angular Velocity Sensor Sensitivity Adjustment (CCD-TRV45E/TRV55E/TRV65E/TRV69E/TRV75/TRV75PK/TRV715)

- This adjustment is performed only when replacing the angular velocity sensor.
  Although this adjustment need not be performed when the circuit is damaged, etc., check the operations.
- Note down the sensitivity displayed on the angular velocity sensor of the repair parts. At this time, note down also to which board it was attached to.
  Be sure to check because if attached incorrectly, the screen will vibrate up and down or left and right during hand-shake correction operations.

Precautions on the Parts Replacement
There are two types of repair parts.
Type A : ENC03EA or ENC 03JA
Type B : ENC03EB or ENC 03JB
Replace the broken sensor with a same type sensor. If replace with other parts, the image will vibrate up and down or left and right during hand-shake correction operations. After replacing, re-adjust according to the adjusting method after replacement.

Precautions on Angular Velocity Sensor
The sensor incorporates a precision oscillator. Handle it with care as if it dropped, the balance of the oscillator will be disrupted and operations will not be performed properly.

| | |
|---|---|
| Adjustment page | F |
| Adjustment Address | 43, 44 |

**Note:** The sensor sensitivity of SE451 and SE452 of the SE-66/67 board is written only on the repair parts.

Adjusting method:
1) Select page: 0, address: 01, and set data: 01.
2) Read the sensor sensitivity written on SE451 of the SE-66/67 board, and take this as $S_{451}$.
3) Read the sensor sensitivity written on SE452 of the SE-66/67 board, and take this as $S_{452}$.
4) Calculate $D_{43}'$ and $D_{44}'$ using the following equation (decimal calculation).
   NTSC model(CCD-TRV75/TRV75PK/TRV715)
   $D_{43}' = 85 / S_{451}$
   $D_{44}' = 90 / S_{452}$
   PAL model (CCD-TRV45E/TRV55E/TRV65E/TRV69E)
   $D_{43}' = 118 / S_{451}$
   $D_{44}' = 106 / S_{452}$
5) Convert $D_{43}'$ and $D_{44}'$ into hexadecimal digits, to obtain $D_{43}$ and $D_{44}$. (Round off decimal points)
6) Select page: F, address: 43, set data: $D_{43}$, and press the PAUSE button of the adjusting remote commander.
7) Select page: F, address: 44, set data: $D_{44}$, and press the PAUSE button of the adjusting remote commander.

Processing after Completing Adjustments
1) Select page: 0, address: 01, and set data: 00.
2) Check that the steady shot operations have been performed normally.

## 1-4. MONOCHROME ELECTRONIC VIEWFINDER SYSTEM ADJUSTMENTS

**Note:** NTSC model: CCD-TRV75/TRV75PK/TRV715
PAL model : CCD-TRV3E/TRV13E/TRV23E/TRV45E/
TRV55E/TRV65E/TRV69E

### 1-4-1. Horizontal Slant Check

| Mode | Playback |
|---|---|
| Signal | Alighment tape :<br>For checking operations<br>(WR5-5NSP (NTSC))<br>(WR5-5CSP (PAL))<br>Monoscope section |
| Specified Value | ± 1.5 ° |

Adjusting method:
1) Adjust RV904 (BRIGHT) (VF-99 board) so that the CRT can be seen easily and clearly.
2) Check that the difference between the horizontal line and the tilt of the black mask satisfies the specified value.

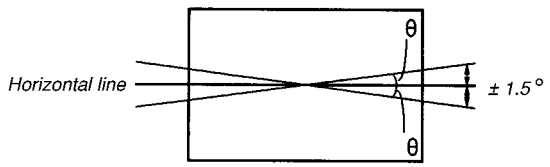


*Specified value : The image should be within ± 1.5° of the horizontal line.*

***Fig. 5-1-12.***

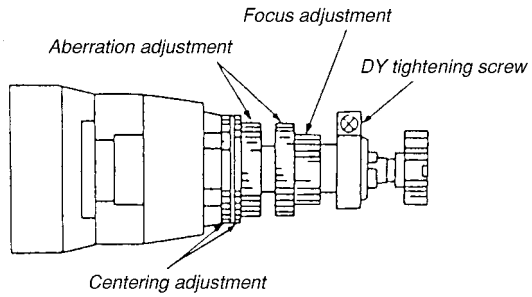


***Fig. 5-1-13.***

### 1-4-2. Centering Adjustment

| Mode | Playback |
|---|---|
| Signal | Alighment tape :<br>For checking operations<br>(WR5-5NSP (NTSC))<br>(WR5-5CSP (PAL))<br>Monoscope section |
| Specified Value | ± 4% |

Adjusting method:
1) Use the centering adjustment ring and adjust so that the left, right, top, and bottom sides of the display are uniform. (Refer to Fig. 5-1-13.)

**Note :** As the centering position changes due to earth magnetism, rotate it 360˚ in the horizontal direction, and adjust with the center section of the modifying position.

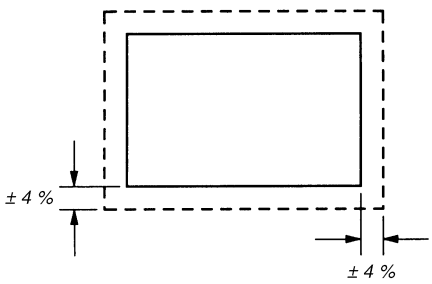


*Adjustment value : ± 4 %*

***Fig. 5-1-14.***

### 1-4-3. Focus Adjustment

| Mode | Playback |
|---|---|
| Signal | Alighment tape :<br>For checking operations<br>(WR5-5NSP (NTSC))<br>(WR5-5CSP (PAL))<br>Monoscope section |

Adjusting method:
1) Adjust the focus ring to obtain the optimum focus. (Refer to Fig. 5-1-13.)

**VF-99 BOARD (SIDE A)**

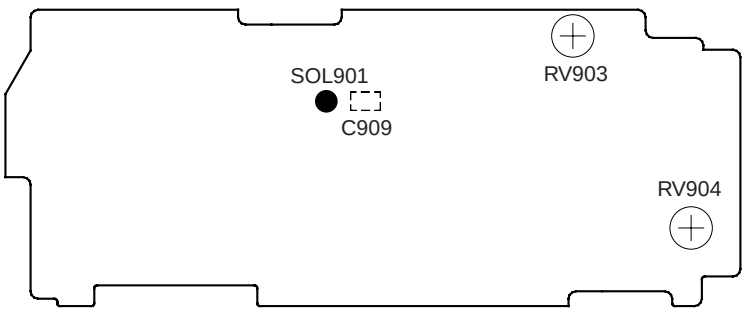

### 1-4-4. Aberration Adjustment

| | |
|---|---|
| Mode | VTR stop |
| Signal | Dot pattern |
| Specified Value | b1≦2 • a1<br>b2≦0.8 • a2 |

Adjusting method:

1) Adjust the aberration adjustment ring so that the tracing of the dot satisfies the specified value.
2) If the centering becomes displaced here, perform the centering adjustment from the beginning again.

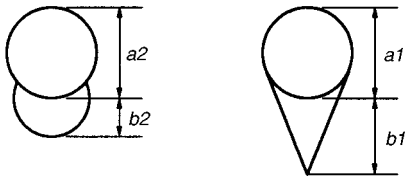


*Fig. 5-1-15.*

### 1-4-5. Horizontal Amplitude Adjustment (VF-99 board)

| | |
|---|---|
| Mode | Playback |
| Signal | Alighment tape :<br>For checking operations<br>(WR5-5NSP (NTSC))<br>(WR5-5CSP (PAL))<br>Monoscope section |
| Adjusting Element | C909 (SOL901) |
| Specified Value | ± 1.5 ° |

Adjusting method:

1) Rotate RV903, and adjust the top and bottom sides of the monoscope image to the top and bottom edges of the display.
2) Rotate RV904 so that the brightness is the normal level.
3) Solder or unsolder SOL901 pattern of the H size adjustment capacitor (C909) to “short” or “open”, so that the horizontal direction over scan becomes 14 ± 6% (Left and right totals).

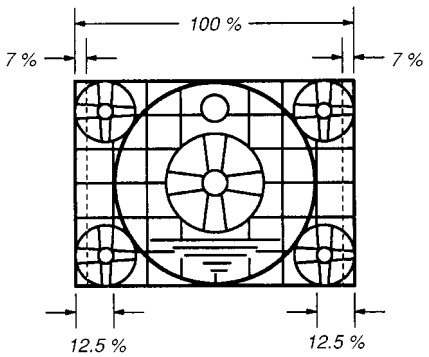


| SOL901 | Size H |
|---|---|
| Open | Small |
| Short | Big |

**VF-99 BOARD (SIDE A)**

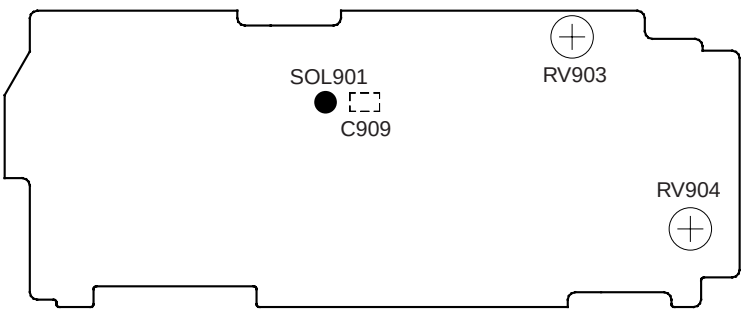


*Fig. 5-1-16.*

### 1-4-6. Vertical Amplitude Adjustment (VF-99 board)

| | |
|---|---|
| Mode | Playback |
| Signal | Alighment tape :<br>For checking operations<br>(WR5-5NSP (NTSC))<br>(WR5-5CSP (PAL))<br>Monoscope section |
| Adjusting Element | RV903 |
| Specified Value | 10 ± 3% |

Adjusting method:

1) Adjust RV903 so that the vertical direction over scan becomes 10 ± 3% (Top and bottom totals).

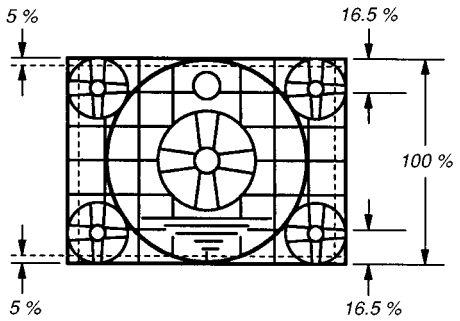


***Fig. 5-1-17.***

### 1-4-7. Brightness Adjustments (VF-99 board)

| | |
|---|---|
| Mode | Playback |
| Signal | Alighment tape :<br>For checking operations<br>(WR5-5NSP (NTSC))<br>(WR5-5CSP (PAL))<br>Monoscope section |
| Specified Value | RV904 |

Adjusting method:

1) Rotate RV904, and adjust so that the bright/dark sections of the gray scale are displayed correctly. (The bright section should be unsatisfactory till the cross hatch appears vague in the monoscope circle. The dark section should be unsatisfactory till the darkest section and the second darkest section of the gray scale cannot be differentiated.)

### 1-4-8. Horizontal Amplitude, Vertical Amplitude, Focus Check

"1-4-5. Horizontal Amplitude Adjustment" and "1-4-6. Vertical Amplitude Adjustment" should both satisfy the specified values. If not, perform the adjustments from the beginning again. In this case, perform "1-4-7. Brightness, Contrast Adjustments" again.
Moreover, check the focus, and if it found to be vague, perform "1-4-3. Focus Adjustment" and "1-4-4. Aberration Adjustment".

**VF-99 BOARD (SIDE A)**

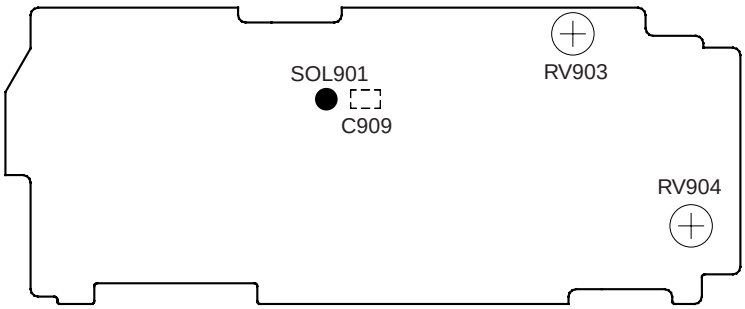

## 1-5. LCD SYSTEM ADJUSTMENT

**Note1:** The back light (fluorescent tube) is driven by a high voltage AC power supply. Therefore, do not touch the back light holder to avoid electrical shock.

**Note2:** When replacing the LCD unit, be careful to prevent damages caused by static electricity.

**Note3:** Set the brightness to the center using the LCD BRIGHT button.

**Note4:** 2.5"LCD model:
PD-92board, Ref. No.5000 series
3"/3.5"LCD model:
PD-93board, Ref. No.4000 series

**Note5:** 2.5" LCD model :
CCD-TRV3E/TRV13E/TRV23E/TRV65E/TRV69E
3" LCD model : CCD-TRV75/TRV75PK/TRV715
3.5" LCD model : CCD-TRV45E/TRV55E

### [Adjusting connector]

Most of the measuring points for adjusting the LCD display are concentrated in the following connector.
CN5501 of the PD-92 board (2.5"LCD model)
CN4501 of the PD-93 board (3"/3.5"LCD model)
Connect the measuring instruments via the multi CPC jig (J-6082-311-A).
The following table shows the Pin No. and signal name of the connector.

| Pin No. | Signal name | Pin No. | Signal name |
|---|---|---|---|
| 1 | VB | 2 | VCO VOLTAGE. |
| 3 | VG | 4 | PANEL COM |
| 5 | VR | 6 | N.C. |
| 7 | SYNC / HD | 8 | H START |
| 9 | GND | 10 | GND |

### [LCD type check]

By measuring the resistor value between Pin ⑥ of CN5501/4501 and Pin ⑩ of CN5501/4501, the type of LCD can be discriminated.

PD-92board CN5501

| Resistor value | LCD type | Model |
|---|---|---|
| 8.2kΩ | 2.5" TYPE S (61k) | CCD-TRV23E |
| 6.8kΩ | 2.5" TYPE S (84k) | CCD-TRV65E/TRV69E |
| 3.9kΩ | 2.5" TYPE C PAL | CCD-TRV3E/ TRV13E |

PD-93board CN4501

| Resistor value | LCD type | Model |
|---|---|---|
| 4.7kΩ | 3" TYPE S NTSC | CCD-TRV75/TRV75PK/ TRV715 |
| 6.8kΩ | 3.5" TYPE S PAL | CCD-TRV45E/TRV55E |

### 1. LCD Initial Data Input

| Mode | VTR stop |
|---|---|
| Signal | Arbitrary |
| Adjustment Page | E |
| Adjustment Address | A5 to A7, B0 to B9, BF, C0, C1, CF, D0 to DD |

Adjusting method:
1) Select page: 0, address: 01, and set data: 01.
2) Select page: D, and input the data in the following table.

**Note:** To write in the non-volatile memory (EEPROM), press the PAUSE button of the adjusting remote commander each time to set the data.

3) Select page: 0, address: 01, and set data: 00.

| Address | Data | Remark |
|---|---|---|
| A5 | 53 | Fixed value |
| A6 | 96 | Fixed value |
| A7 | 68 | Fixed value |
| B0 | 3F | Fixed value |
| B1 | C8 | Fixed value |
| B2 | 1F | Fixed value |
| B3 | 1F | Fixed value |
| B4 | 00 | Fixed value |
| B5 | 00 | Fixed value |
| B6 | Note1 | Fixed value |
| B7 | 4E | Fixed value |
| B8 | 08 | Fixed value |
| B9 | 00 | Fixed value |
| BF | 80 | [VCO adjustment] <Fixed value> |
| C0 | Note2 | Fixed value |
| C1 | Note3 | Fixed value |
| CF | 69/84 | Bright adjustment (Note 5) |
| D0 | 7A/77 | Color adjustment (Note 5) |
| D1 | AA/98 | White balance adjustment (Note 5) |
| D2 | 9C/7B | White balance adjustment (Note 5) |
| D3 | B1/DC | Contrast adjustment (Note 5) |
| D4 | B1/80 | D range adjustment (Note 5) |
| D5 | 94/89 | V-COM level adjustment (Note 5) |
| D6 | 80 | VCO adjustment |
| D7 | 80 | V-COM level adjustment |
| D8 | 80 | Fixed value |
| D9 | Note4 | [Color adjustment] <Fixed value> |
| DA | 80 | Fixed value |
| DB | 52 | Fixed value |
| DC | 99 | Fixed value |
| DD | 99 | Fixed value |

< > : NTSC model only
[ ] : PAL model only

**Note1:** B0: NTSC model
F0: PAL model

**Note2:** A4: 2.5" LCD model
8B: 3" LCD model
91: 3.5" LCD model

**Note3:** D8: 2.5" LCD TYPE S model
CF: 2.5" LCD TYPE C model
B8: 3" LCD model
B7: 3.5" LCD model

**Note4:** 00: NTSC model
7A: LCD TYPE S PAL model
77: LCD TYPE C PAL model

**Note5:** LCD TYPE S/LCD TYPE C

### 2. VCO Adjustment (PD-92/93 board)

Set the VCO freerun frequency. If deviated, the LCD screen will be blurred.

| | |
|---|---|
| Mode | VTR stop |
| Signal | No signal |
| Measurement point | Pin ② of CN5501/4501 (VCO VOLTAGE) of PD-92/93 board |
| Measuring instrument | Oscilloscope |
| Adjustment page | E |
| Adjustment address | D6 (NTSC)<br>D6, BF (PAL) |
| Specified value | A = 2.75 ± 0.02V<br>(LCD TYPE S model)<br>A = 1.70 ± 0.02V<br>(LCD TYPE C model) |

**Note1:** NTSC model: CCD-TRV75/TRV75PK/TRV715
PAL model: CCD-TRV3E/TRV13E/TRV23E/TRV45E/ TRV55E/TRV65E/TRV69E

**Note2 :** LCD TYPE S model : CCD-TRV23E/TRV45E/ TRV55E/TRV65E/TRV69E/ TRV75/TRV75PK/TRV715
LCD TYPE C model : CCD-TRV3E/TRV13E

Adjusting method:

1) Select page: 0, address: 01, and set data: 01.
2) Select page: 3, address: 01, set data: 55, and press the PAUSE button of the adjusting remote commander.
3) Select page: 2, address: 7D, and set data: 00.
4) Select page: E, address: D6, change the data and set the VCO VOLTAGE (A) to the specified value.
5) Press the PAUSE button of the adjusting remote commander.
7) Only for PAL model, select page: E, address: D6, and read the data ($D_{D6}$).
8) Only for PAL model, calculate the adjustment data (hexadecimal) from the following equations (hexadecimal calculation), and input to address: BF. (Refer to Table 5-1-2. Hexadecimal-Decimal conversion Table.)

   CCD-TRV23E/TRV65E/TRV69E :
   $D_{BF} = D_{D6}$
   CCD-TRV45E/TRV55E :
   When $D_{D6} \geqq 10$
   $D_{BF} = D_{D6} - 10$
   When $D_{D6} < 10$
   $D_{BF} = 00$
   CCD-TRV3E/TRV13E :
   When $D_{D6} \geqq 55$
   $D_{BF} = D_{D6} - 55$
   When $D_{D6} < 55$
   $D_{BF} = 00$

**Note2:** After setting data, be sure to press the PAUSE button.

9) Select page: 3, address: 01, set data: 00, and press the PAUSE button of the adjusting remote commander.
10) Select page: 0, address: 01, and set data: 00.

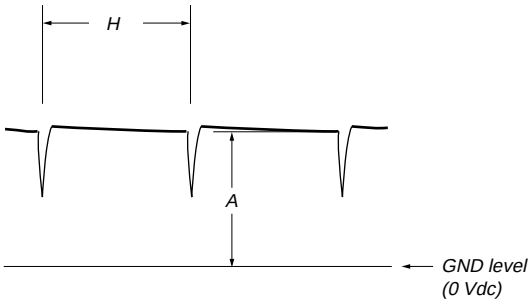


***Fig. 5-1-18.***

### 3. D range Adjustment (PD-92/93 board)

Set the D range of the RGB decoder used to drive the LCD to the specified value. If deviated, the LCD screen will become blackish or saturated (whitish).

| | |
|---|---|
| Mode | VTR stop |
| Signal | No signal |
| Measurement point | Pin ③ of CN5501/4501 (VG) of PD-92/93 board<br>External trigger : Pin ④ of CN5501/ CN4501 (PANEL COM) |
| Measuring instrument | Oscilloscope |
| Adjustment page | E |
| Adjustment address | D4 |
| Specified value | A = 3.62 ± 0.05V<br>(LCD TYPE S model)<br>A = 2.98 ±0.05V<br>(LCD TYPE C model) |

**Note1 :** Press the DISPLAY button and erase the screen indictors on the LCD screen.

**Note2 :** LCD TYPE S model : CCD-TRV23E/TRV45E/ TRV55E/TRV65E/TRV69E/ TRV75/TRV75PK/TRV715
LCD TYPE C model : CCD-TRV3E/TRV13E

Adjusting method:

1) Select page: 0, address: 01, and set data: 01.
2) Select page: 3, address: 01, set data: 55, and press the PAUSE button of the adjusting remote commander.
3) Select page: 2, address: 7D, and set data: 00.
4) Select page: E, address: D4, change the data and set the voltage (A) between the reversed waveform pedestal and non-reversed waveform pedestal to the specified value.
5) Press the PAUSE button of the adjusting remote commander.
6) Select page: 3, address: 01, set data: 00, and press the PAUSE button of the adjusting remote commander.
7) Select page: 0, address: 01, and set data: 00.

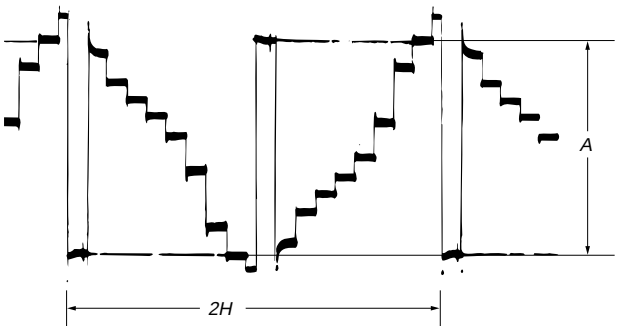


***Fig. 5-1-19.***

### 4. Bright Adjustment (PD-92/93 board)

Set the level of the VIDEO signal for driving the LCD to the specified value. If deviated, the screen image will be blackish or saturated (whitish).

| | |
|---|---|
| Mode | VTR stop |
| Signal | No signal |
| Measurement point | Pin ③ of CN5501/4501 (VG) of PD-92/93 board<br>External trigger : Pin ④ of CN5501/CN4501 (PANEL COM) |
| Measuring instrument | Oscilloscope |
| Adjustment page | E |
| Adjustment address | CF |
| Specified value | A = 1.94 ± 0.05V<br>(LCD TYPE S model)<br>A = 1.34 ± 0.05V<br>(LCD TYPE C model) |

**Note1 :** LCD TYPE S model : CCD-TRV23E/TRV45E/TRV55E/TRV65E/TRV69E/TRV75/TRV75PK/TRV715
LCD TYPE C model : CCD-TRV3E/TRV13E

Adjusting method:
1) Select page: 0, address: 01, and set data: 01.
2) Select page: 3, address: 01, set data: 55, and press the PAUSE button of the adjusting remote commander.
3) Select page: 2, address: 7D, and set data: 40.
4) Select page: E, address: CF, change the data and set the voltage (A) between the pedestal and white to the specified value. (The data of address: CF should be “41” to “BF”.)
5) Press the PAUSE button of the adjusting remote commander.
6) Select page: 3, address: 01, set data: 00, and press the PAUSE button of the adjusting remote commander.
7) Select page: 2, address: 7D, and set data: 00.
8) Select page: 0, address: 01, and set data: 00.

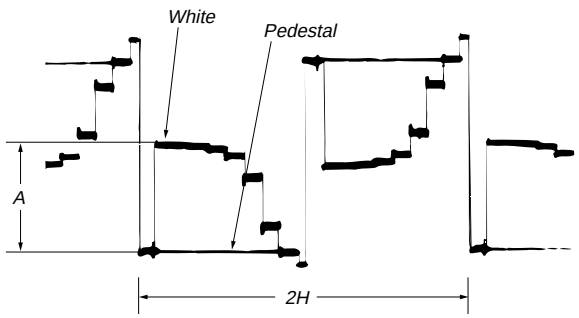


*Fig. 5-1-20.*

### 5. Contrast Adjustment (PD-92/93 board)

Set the level of the VIDEO signal for driving the LCD to the specified value. If deviated, the screen image will be blackish or saturated (whitish).

| | |
|---|---|
| Mode | VTR stop |
| Signal | No signal |
| Measurement point | Pin ③ of CN5501/4501 (VG) of PD-92/93 board<br>External trigger : Pin ④ of CN5501/CN4501 (PANEL COM) |
| Measuring instrument | Oscilloscope |
| Adjustment page | E |
| Adjustment address | D3 |
| Specified value | A = 3.52 ± 0.07V<br>(LCD TYPE S model)<br>A = 2.54 ± 0.07V<br>(LCD TYPE C model) |

**Note1 :** LCD TYPE S model : CCD-TRV23E/TRV45E/TRV55E/TRV65E/TRV69E/TRV75/TRV75PK/TRV715
LCD TYPE C model : CCD-TRV3E/TRV13E

Adjusting method:
1) Select page: 0, address: 01, and set data: 01.
2) Select page: 3, address: 01, set data: 55, and press the PAUSE button of the adjusting remote commander.
3) Select page: 2, address: 7D, and set data: 00.
4) Select page: E, address: D3, change the data and set the voltage (A) between the pedestal (0 IRE) and 100 IRE to the specified value.
5) Press the PAUSE button of the adjusting remote commander.
6) Select page: 3, address: 01, set data: 00, and press the PAUSE button of the adjusting remote commander.
7) Select page: 0, address: 01, and set data: 00.

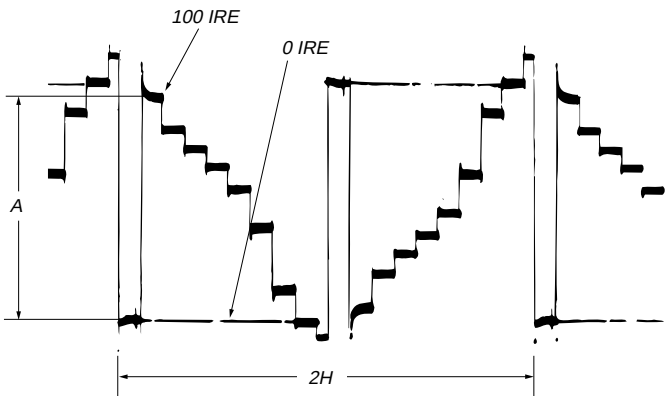


*Fig. 5-1-21.*

### 6. V-COM Level Adjustment (PD-92/93 board)

Set the common electrode drive signal level of LCD to the specified value.

| | |
|---|---|
| Mode | VTR stop |
| Signal | No signal |
| Measurement point | Pin ④ of CN5501/CN4501 (PANEL COM) of PD-92/93 board |
| Measuring instrument | Oscilloscope |
| Adjustment page | E |
| Adjustment address | D5 |
| Specified value | LCD TYPE S NTSC model :<br>A = 6.50 ± 0.05V<br>2.5" LCD TYPE S PAL model :<br>A = 6.43 ± 0.05V<br>3.5" LCD TYPE S PAL model :<br>A = 6.70 ± 0.05V<br>LCD TYPE C PAL model :<br>A = 5.10 ± 0.05V |

**Note1 :** Perform "Bright Adjustment" and "Contrast Adjustment" before this adjustment.

**Note2 :** LCD TYPE S NTSC model : CCD-TRV75/TRV75PK/TRV715
LCD TYPE C PAL model : CCD-TRV3E/TRV13E
2.5" LCD TYPE S PAL model : CCD-TRV23E/TRV65E/TRV69E
3.5" LCD TYPE S PAL model : CCD-TRV45E/TRV55E

Adjusting method:

1) Select page: 0, address: 01, and set data: 01.
2) Select page: 3, address: 01, set data: 55, and press the PAUSE button of the adjusting remote commander.
3) Select page: 2, address: 7D, and set data: 00.
4) Select page: E, address: D5, change the data and set the PANEL COM signal level (A) to the specified value.
5) Press the PAUSE button of the adjusting remote commander.
6) Select page: 3, address: 01, set data: 00, and press the PAUSE button of the adjusting remote commander.
7) Select page: 0, address: 01, and set data: 00.

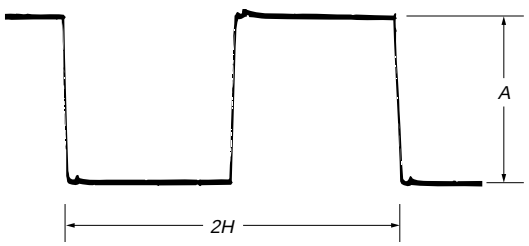


*Fig. 5-1-22.*

### 7. Color Adjustment (PD-92/93 board)

Set the color saturation to the standard value. If deviated, the color will be to dark or light.

| | |
|---|---|
| Mode | VTR stop |
| Signal | No signal |
| Measurement point | Pin ③ of CN5501/4501 (VG) of PD-92/93 board<br>External trigger : Pin ④ of CN5501/CN4501 (PANEL COM) |
| Measuring instrument | Oscilloscope |
| Adjustment page | E |
| Adjustment address | D0 (NTSC)<br>D0, D9 (PAL) |
| Specified value | 3" LCD TYPE S model :<br>A = 0.05 ± 0.05V<br>2.5" LCD TYPE S (61k) PAL model :<br>A = 0.13 ± 0.05V<br>2.5" LCD TYPE S (84k) PAL model :<br>A = 0.12 ± 0.05V<br>3.5" LCD TYPE S PAL model :<br>A = 0.07 ± 0.05V<br>2.5" LCD TYPE C PAL model :<br>A = 0.05 ± 0.05V |

**Note1:** 3" LCD TYPE S NTSC model :
CCD-TRV75/TRV75PK/TRV715
2.5" LCD TYPE S (61k) PAL model : CCD-TRV23E
2.5" LCD TYPE S (84k) PAL model : CCD-TRV65E69E
3.5" LCD TYPE S PAL model : CCD-TRV45E/TRV55E
2.5" LCD TYPE C PAL model : CCD-TRV3E/TRV13E

Adjusting method:

1) Select page: 0, address: 01, and set data: 01.
2) Select page: 3, address: 01, set data: 57, and press the PAUSE button of the adjusting remote commander.
3) Select page: 2, address: 7D, and set data: 20.
4) Select page: E, address: D0, change the data and set the voltage (A) between the green and white to the specified value.
5) Press the PAUSE button of the adjusting remote commander.
6) Only for PAL model, select page: E, address: D9, and set the same data as page: E, address: D0, and press the PAUSE button of the adjusting remote commander.
7) Select page: 3, address: 01, set data: 00, and press the PAUSE button of the adjusting remote commander.
8) Select page: 2, address: 7D, and set data: 00.
9) Select page: 0, address: 01, and set data: 00.

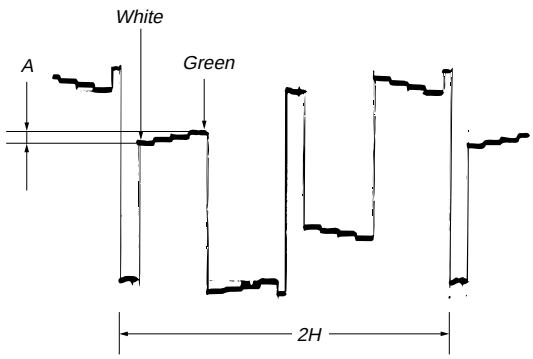


*Fig. 5-1-23.*

### 8. V-COM Adjustment (PD-92/93 board)

Set the DC bias of the common electrode drive signal of LCD to the specified value.
If deviated, the LCD display will move, producing flicker and conspicuous vertical lines.

| | |
|---|---|
| Mode | VTR stop |
| Signal | No signal |
| Measurement point | Check on LCD display |
| Measuring instrument | |
| Adjustment page | E |
| Adjustment address | D7 |
| Specified value | The brightness difference between the section Ⓐ and section Ⓑ is minimum. |

**Note1 :** Perform “Bright Adjustment" and “Contrast Adjustment” before this adjustment.

Adjusting method:

1) Select page: 0, address: 01, and set data: 01.
2) Select page: 3, address: 01, set data: 51, and press the PAUSE button of the adjusting remote commander.
3) Select page: 2, address: 7D, and set data: 87.
4) Select page: E, address: D7, change the data so that the brightness of the section A and that of the section B is equal.
5) Press the PAUSE button of the adjusting remote commander.
6) Select page: 3, address: 01, set data: 00, and press the PAUSE button of the adjusting remote commander.
7) Select page: 2, address: 7D, and set data: 00.
8) Select page: 0, address: 01, and set data: 00.

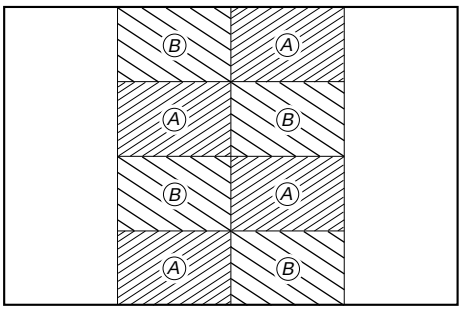


***Fig. 5-1-24.***

### 9. White Balance Adjustment (PD-92/93 board)

Correct the white balance.
If deviated, the LCD screen color cannot be reproduced.

| | |
|---|---|
| Mode | VTR stop |
| Signal | No signal |
| Measurement point | Check on LCD display |
| Measuring instrument | |
| Adjustment page | E |
| Adjustment address | D1, D2 |
| Specified value | The LCD screen should not be colored. |

**Note1:** Check the white balance only when replacing the following parts. If necessary, adjust them.

1. LCD panel
2. Light induction plate
3. IC5502/4502

**Note2 :** LCD TYPE S NTSC model : CCD-TRV75/TRV75PK/TRV715
LCD TYPE S PAL model : CCD-TRV23E/TRV45E/TRV55E/TRV65E/TRV69E
LCD TYPE C model : CCD-TRV3E/TRV13E

Adjusting method:

1) Select page: 0, address: 01, and set data: 01.
2) Select page: 3, address: 01, set data: 51, and press the PAUSE button of the adjusting remote commander.
3) Select page: 2, address: 7D, and set data: 03.
4) Select page: E, address: D1 and D2, and set the data to the initial value.

**Note:** To write in the non-volatile memory (EEPROM), press the PAUSE button of the adjusting remote commander each time to set the data.

| Address | Data | | |
|---|---|---|---|
| | LCD TYPE S | | LCD TYPE C |
| | NTSC | PAL | PAL |
| D1 | 98 | 94 | 97 |
| D2 | 88 | 81 | 8D |

5) Check that the LCD screen is not colored. If colored, change the data of page: E, address: D1 and D2 so that the LCD screen is not colored.

**Note:** To write in the non-volatile memory (EEPROM), press the PAUSE button of the adjusting remote commander each time to set the data.

6) Select page: 3, address: 01, set data: 00, and press the PAUSE button of the adjusting remote commander.
7) Select page: 2, address: 7D, and set data: 00.
8) Select page: 0, address: 01, and set data: 00.

## 5-2. MECHANICAL SECTION ADJUSTMENT

### Mechanism Parts Adjustments

For details on the adjustments and checks of mechanical section and replacements of mechanism parts, refer to the separate volume- "8 mm Video Mechanism Adjustment Manual VII B Mechanism ".

### 2-1. OPERATING WITHOUT A CASSETTE

1) Refer to "Section 2 DISASSEMBLY" and supply the power with the cabinet removed. (So that the mechanical deck can be operated.)
2) Connect the adjusting remote commander to the LANC terminal.
3) Turn on the HOLD switch of the adjusting remote commander.
4) Close the cassette compartment without loading a cassette and complete loading.
5) Select page: 0, address: 01, and set data: 01.
6) Select page: F, address: 2A, and set data: 01, and press the PAUSE button of the adjusting remote commander.
7) Select page: D, address: 10, and set data: 10, and press the PAUSE button of the adjusting remote commander.
8) Disconnect the power supply of the unit.
   By carrying out the above procedure, the unit can be operated without loading a cassette.
   Be sure to carry out "Processing after Operations" after checking the operations.
   Set the data of page: D, address: 10 to the following if the sensor ineffective mode, forced PLAYER (VTR) power supply ON mode or forced camera power supply ON mode are to be used together.
   Forced VTR power supply ON mode ..... 12
   Forced camera power supply ON mode ..... 11

**[Processing after Operations]**

1) Select page: 0, address: 01, and set data: 01.
2) Select page: F, address: 2A, and set data: 00, and press the PAUSE button of the adjusting remote commander.
3) Select page: D, address: 10, and set data: 00, and press the PAUSE button of the adjusting remote commander.
4) Select page: 0, address: 01, and set data: 00.
5) Disconnect the power supply of the unit.

### 2-2. TAPE PATH ADJUSTMENT

**1. Preparations for adjustments**

1) Clean the tape path face (tape guide, drum, capstan shaft, pinch roller).
2) Connect the adjusting remote commander to the LANC terminal.
3) Turn on the HOLD switch of the adjusting remote commander.
4) Select page: 0, address: 01, and set data: 01.
5) Select page: F, address: 2A, and set data: 04 and press the PAUSE button of the adjusting remote commander.
   ( Be sure to perform "Processing after operations" after completing adjustments.
6) Connect the oscilloscope.
   Channel 1: Pin ⑥ of CN910 of VC-195 board
   External trigger: Pin ⑪ of CN910 of VC-195 board
   ( Connect the oscilloscope via the CPC-7 jig (J-6082-382-A). )
7) Playback the alignment tape for tracking.
   WR5-1NP: For NTSC model: CCD-TRV75/TRV75PK/ TRV715
   WR5-1CP: For PAL model: CCD-TRV3E/TRV13E/ TRV23E/TRV45E/TRV55E/ TRV65E/TRV69E
8) Check that the RF waveform of the oscilloscope is flat at both the entrance and the exit.
   If not flat, perform necessary adjustment according to the separate "8 mm Video Mechanical Adjustment Manual VII (B Mechanism)".
9) Perform "Processing after operations", after completing adjustments.

CN910 of VC-195 board

**[Processing after operations]**

| Pin No. | Signal Name | Pin No. | Signal Name |
|---|---|---|---|
| 1 | LANC SIG | 9 | RF AGC OUT |
| 2 | XCPC IN | 10 | REC RF |
| 3 | IR VIDEO | 11 | RF SWP |
| 4 | AFC F0 | 12 | CAP FG |
| 5 | BPF MONI | 13 | EVF BL |
| 6 | PB RF | 14 | EVF BL 4.75V |
| 7 | RF AGC IN | 15 | VCO |
| 8 | REG GND | 16 | EVF VG |

1) Connect the adjusting remote commander, and turn on the HOLD switch.
2) Select page: 0, address: 01, and set data: 01.
3) Select page: F, address: 2A, and set data: 00.
4) Press the PAUSE buttonA of the adjusting remote commander.
5) Select page: 0, address: 01, and set data: 00.
6) Remove the power supply from the unit.

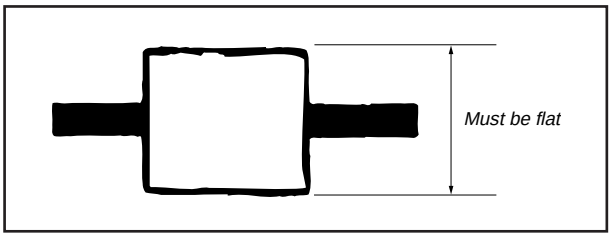


***Fig. 5-2-1.***

## 5-3. VIDEO SECTION ADJUSTMENTS

**When performing adjustments, refer to the layout diagrams for adjustment related parts beginning from page 5-60.**

## 3-1. PREPARATIONS BEFORE ADJUSTMENT

The following adjusting instruments are used for adjusting the video section.

### 3-1-1. Equipments to be Used

1) TV monitor
2) Oscilloscope: 2 phenomena, band 30 MHz or wider, with delay mode. (Use a 10:1 probe unless specified otherwise.)
3) Frequency counter
4) Pattern generator with video output terminal
5) Digital voltmeter
6) Audio generator
7) Audio level meter
8) Audio distortion meter
9) Audio attenuater
10) Regulated power supply
11) Alignment tape
    [For NTSC model]
    - For tracking adjustment (WR5-1NP)
      Part Code: 8-967-995-02
    - For video frequency characteristics adjustment (WR5-7NE) Part Code: 8-967-995-13
    - For checking Standard 8 mode operations
      For LP (WR5-4NL)
      Part Code: 8-967-995-51
      For SP (WR5-5NSP)
      Part Code: 8-967-995-42
      **Note:** The following alignment tapes can also be used.
      WR5-4NSP (8-967-995-41)
    - For checking Hi8 mode operations
      For SP (WR5-8NSE)
      Part Code: 8-967-995-43
      For LP (WR5-8NLE)
      Part Code: 8-967-995-52
    - For checking AFM stereo operations (WR5-9NS)
      Part Code: 8-967-995-23
      For checking BPF adjustment (WR5-11NS)
      Part Code: 8-967-995-71

    [For PAL model]
    - For tracking adjustment (WR5-1CP)
      Part Code: 8-967-995-07
    - For video frequency characteristics adjustment (WR5-7NE) Part Code: 8-967-995-18
    - For checking Standard 8 mode operations
      For LP (WR5-4CL)
      Part Code: 8-967-995-56
      For SP (WR5-5CSP)
      Part Code: 8-967-995-47
    - For checking Hi8 mode operations
      For SP (WR5-8CSE)
      Part Code: 8-967-995-48
      For LP (WR5-8CLE)
      Part Code: 8-967-995-57
      **Note:** The following alignment tapes can also be used.
      1) WR5-3CL (8-967-995-36)
      2) WR5-4CSP (8-967-995-46)
    - For checking AFM stereo operations (WR5-9CS)
      Part Code: 8-967-995-28
      For checking BPF adjustment (WR5-11CS)
      Part Code: 8-967-995-76
12) Remote commander for adjustment (J-6082-053-B)
13) CPC-7 jig Part Code: J-6082-382-A
    **Note :** Connect the adjusting remote commander to the LANC jack, and set the HOLD switch to the "ADJ" side, or press the battery switch of the battery terminal using adhesive tape, etc.
14) Power code Part Code: J-6082-223-A
15) AFM DEV jig (J-6082-312-A)
16) IR Receiving jig (J-6082-383-A)
17) Extension cable (48P, 0.8mm) (J-6082-188-A)

### 3-1-2. Precautions on Adjusting

1) The adjustments of this unit are performed in the VTR mode or camera mode.
   To set to the VTR mode, set the power switch to "VTR" (or "PLAYER") or set the "Forced VTR Power ON mode" using the adjusting remote commander (Note 1).
   To set to the Camera mode, set the power switch to "CAMERA" or set the "Forced Camera Power ON mode" using the adjusting remote commander (Note 2).
   After completing adjustments, be sure to exit the "Forced VTR Power ON Mode" or "Forced Camera Power ON Mode". (Note 3)
2) By setting the "Forced VTR Power ON mode" or "Forced Camera Power ON mode", the video section can be operate even if even if the front panel block (MA-312/331 board, power switch, microphone unit) has been removed. When removing the front panel block disconnect the following connector.
   1. VC-195 board CN903 (23P 0.5mm)
3) The lens block (CD-197/198 board) need not be connected except during battery end adjustment. To remove, disconnect the following connectors.
   1. VC-195 board CN501 (16P, 0.5mm)
   2. VC-195 board CN551 (23P, 0.5mm)
4) The intelligent accessory shoe (Intelligent accessory shoe model) need not be assembled. If removing it. disconnect the following connector.
   1. VC-195 board CN909 (10P, 0.5mm)
5) Cabinet (R) ( Camera function switch (CF-50/51board), LCD block, viewfinder) need not be connected. But removing the cabinet (R) (removing the VC-195 board CN911) means removing the lithium 3V power supply (CF-50/51 board) , data such as date, time, user-set menus will be lost. After completing adjustments, reset these data. If the cabinet (R) has been removed, the self-diagnosis data, data on history of use (total drum rotation time etc. ) will be lost. Before removing, note down the self-diagnosis data and data on the history use. (Refer to the "Service Mode" for the data on the history use.) To remove the cabinet (R), disconnect the following connectors.
   1. VC-195 board CN911 (50P, 0.5mm)
   2. DD-105 board CN933 (11P, 1.0mm)

**Note 1:** Setting the "Forced VTR Power ON" mode (VTR mode)
1) Select page: 0, address: 01, and set data: 01.
2) Select page: D, address: 10, set data: 02, and press the PAUSE button of the adjusting remote commander.

The above procedure will enable the VTR power to be turned on with the front panel block removed.
After completing adjustments, be sure to exit the "Forced VTR Power ON mode".

**Note 2:** Setting the "Forced Camera Power ON" mode (Camera mode)
1) Select page: 0, address: 01, and set data: 01.
2) Select page: D, address: 10, set data: 01, and press the PAUSE button of the adjusting remote commander.

The above procedure will enable the camera power to be turned on with the front panel block removed.
After completing adjustments, be sure to exit the "Forced Camera Power ON mode".

**Note 3:** Exiting the "Forced Power ON" mode
1) Select page: 0, address: 01, and set data: 01.
2) Select page: D, address: 10, set data: 00, and press the PAUSE button of the adjusting remote commander.
3) Select page: 0, address: 01, and set data: 00.

### 3-1-3. Adjusting Connectors

Some of the adjusting points of the video section are concentrated at VC-195 board CN910. Connect the measuring instruments via the CPC-7 jig (J-6082-382-A). The following table lists the pin numbers and signal names of CN910.

| Pin No. | Signal Name | Pin No. | Signal Name |
|---|---|---|---|
| 1 | LANC SIG | 9 | RF AGC OUT |
| 2 | XCPC IN | 10 | REC RF |
| 3 | IR VIDEO | 11 | RF SWP |
| 4 | AFC F0 | 12 | CAP FG |
| 5 | BPF MONI | 13 | EVF BL |
| 6 | PB RF | 14 | EVF BL 4.75V |
| 7 | RF AGC IN | 15 | VCO |
| 8 | REG GND | 16 | EVF VG |

***Table 5-3-1.***

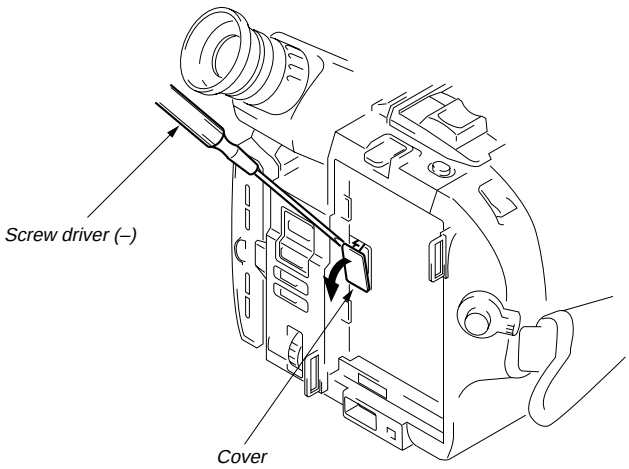


***Fig. 5-3-1.***

### 3-1-4. Connecting the Equipments

Connect the measuring instruments as shown in Fig. 5-3-2 and perform the adjustments.

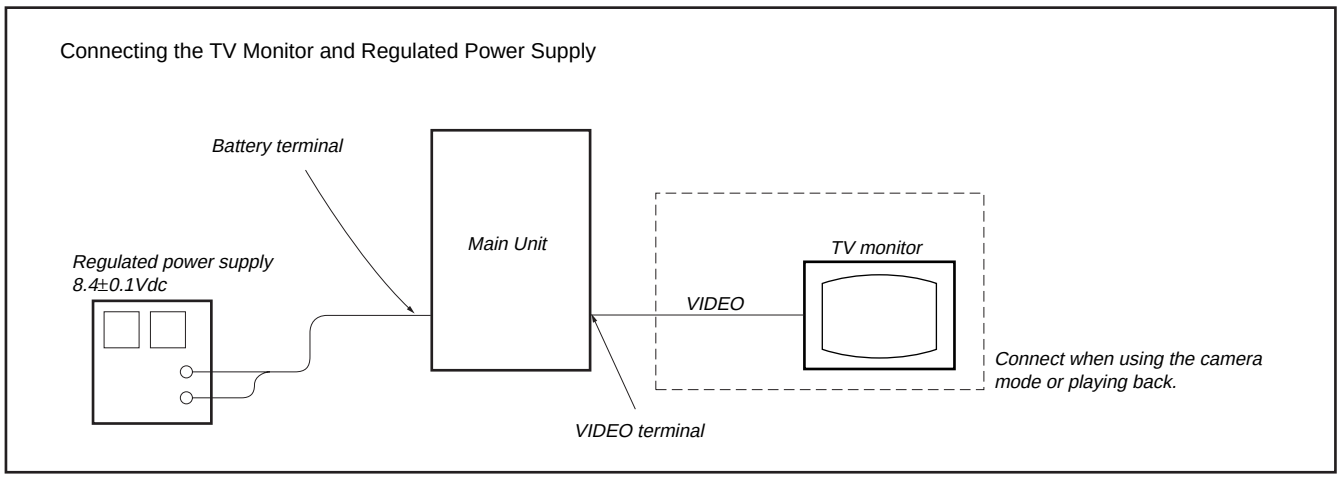


***Fig. 5-3-2.***

### 3-1-5. Alignment Tape

The following table lists alignment tapes which are available. Use the tape specified in the signal column for each adjustment. If the type of tape to be used for checking operations is not specified, use whichever type.

| Name | Record-ing mode | Tape type | Tape speed | Usage |
|---|---|---|---|---|
| Tracking<br>WR5-1NP (NTSC)<br>WR5-1CP (PAL) | Standard 8 mm | MP | SP | Tape path adjustment Switching position adjustment |
| Video frequency characteristics<br>WR5-7NE (NTSC)<br>WR5-7CE (PAL) | Hi8 | ME | SP (NTSC) LP (PAL) | Frequency characteristics adjustment |
| Operation check (SP mode)<br>WR5-5NSP (NTSC)<br>WR5-5CSP (PAL) | Standard 8 mm | MP | SP | Checking operations |
| Operation check (SP mode)<br>WR5-8NSE (NTSC)<br>WR5-8CSE (PAL) | Hi8 | ME | SP | |
| Operation check (LP mode)<br>WR5-4NL (NTSC)<br>WR5-4CL (PAL) | Standard 8 mm | MP | LP | |
| Operation check (LP mode)<br>WR5-8NLE (NTSC)<br>WR5-8CLE (PAL) | Hi8 | ME | LP | |
| AFM stereo Operation check<br>WR5-9NS (NTSC)<br>WR5-9CS (PAL) | Standard 8 mm | MP | SP | AFM stereo Checking operations |
| BPF adjustment<br>WR5-11NS (NTSC)<br>WR5-11CS (PAL) | Standard 8 mm | MP | SP | BPF adjustment |

Tape type
MP ..... Particle type metal tape
ME ..... Evaporated type metal tape

***Table 5-3-2.***

Fig. 5-3-3. shows the 75% color bar signals recorded on the alignment tape.

**Note:** Measure using the VIDEO terminal (Terminated at 75 Ω).

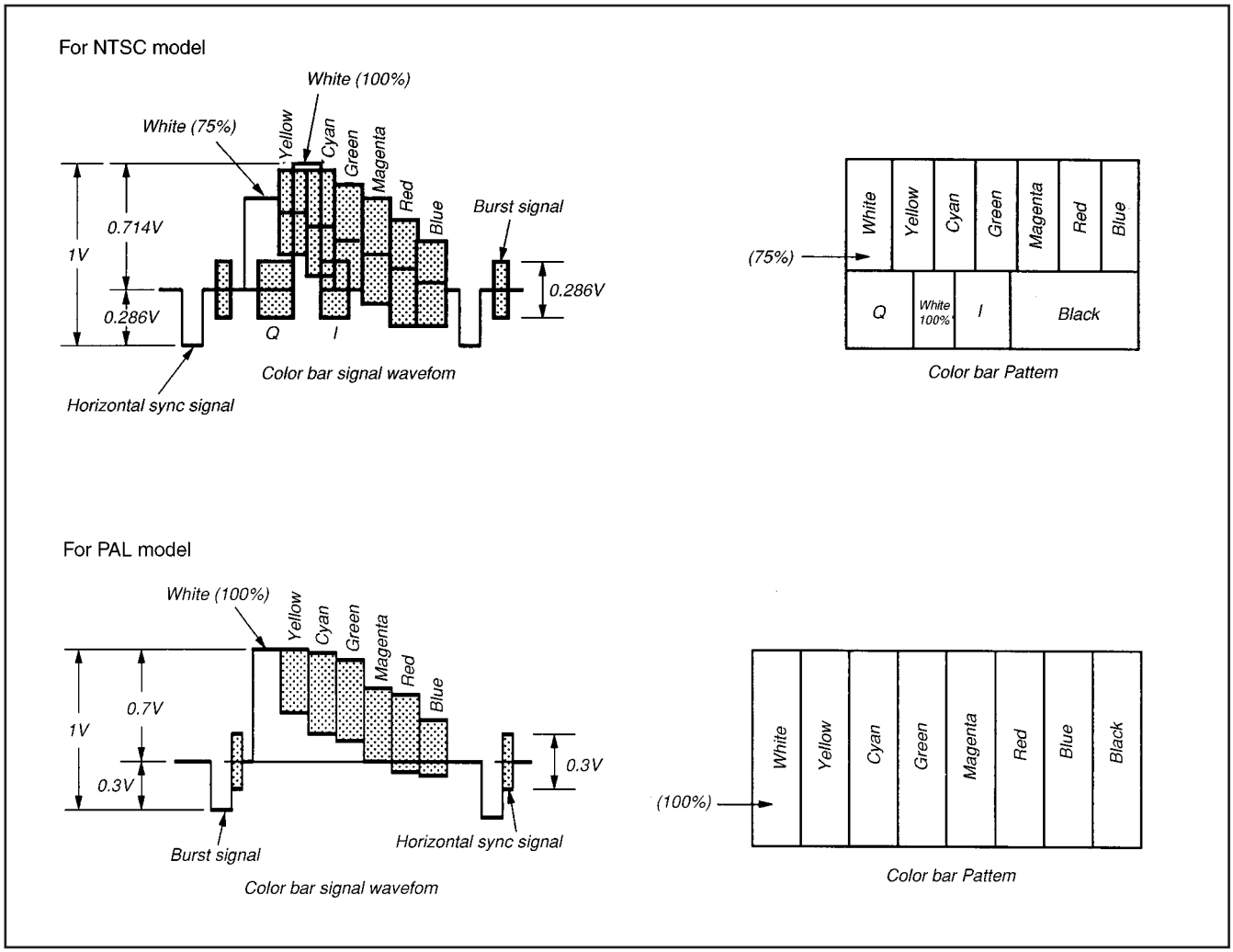


***Fig. 5-3-3. Color Bar Signals of the Alignment Tape***

### 3-1-6. Input/Output Level and Impedance

Video input/output

Phono jack, 1 Vp-p, 75Ω,
unbalanced, sync negative

S video input/output (Hi8 model)

4-pin mini DIN
Luminance signal:
1Vp-p, 75Ω, unbalanced, sync negative
Chrominance signal:
0.286Vp-p, 75Ω, unbalanced (NTSC)
0.3Vp-p, 75Ω, unbalanced (PAL)

Audio input/output

Phono jack,
Input: –7.5 dBs, input impedance more than 47 kΩ
Output: –7.5 dBs, (at load impedance 47 kΩ), impedance less than 2.2 kΩ

### 3-1-7. Recording Mode (Standard 8/Hi8) switching (Hi8 model)

The record mode (Standard 8/Hi8) of this unit switches as shown in the following table. The playback mode (Standard 8/Hi8) switches automaticaly according to the recording mode of the tape played back.

| Tape Used | Recording Mode |
|---|---|
| ME | Hi8 |
| Hi8 MP | |
| MP | Standard 8 |

### 3-1-8. Service Mode

Additional note on adjustment

**Note:** After the completion of the all adjustments, cancell the service mode by either of the following ways.

1) Unplug the main power supply and remove the lithium battery. (In this case, date and time and menu setting have been set by users are canceled. Perform resetting.)
2) After data on page: D and F is restored, select page: 0, address: 01, and return the data to 00. And when data on page: 3 is changed, return the data to the original condition.

#### 1. Test mode setting

Set/release each test mode. Select page: 0, address: 01, and set data: 01 before setting the data of page D and F.

| Page F | Address 2A |
|---|---|

| Data | Function |
|---|---|
| 00 | Normal |
| 01 | Test mode<br>Various emergency prohibitions and releases<br>Drum emergency, capstan emergency, loading motor emergency, reel emergency, tape top and end, DEW detection |

| Page D | Address 10 |
|---|---|

| Data | Function |
|---|---|
| 00 | Normal |
| 01 | Camera power ON |
| 02 | VTR power ON |
| 03 | Camera+VTR power ON |

* For page D and F, the data set will be recorded in the nonvolatile memory by pressing the PAUSE button on the adjusting remote commander. Take note that, in this case, the test mode will not be released even if the main power has been turned off (8.4 Vdc).

* Be sure to return this address data to 00 after completing adjustments/repairs and press the PAUSE button of the adjusting remote commander. And select page: 0, address: 01, and set data: 00.

### 2. Emergency Memory Address

| Page F | Address 10 to 1B |
|---|---|

| Address | Contents |
|---|---|
| 10 | 1st EMG code |
| 12 | Upper: MSW code when the mechanism starts shifting the 1st time<br>Lower: MSW code when the 1st emergency occurs |
| 13 | Lower: Target MSW code of the 1st emergency occurs |
| 14 | 2nd EMG code |
| 16 | Upper: MSW code when the mechanism starts shifting the 2nd time<br>Lower: MSW code when the 2nd emergency occurs |
| 17 | Lower: Target MSW code of the 2nd emergency occurs |
| 18 | Last EMG code |
| 1A | Upper: MSW code when the mechanism starts shifting the last time<br>Lower: MSW code when the last emergency occurs |
| 1B | Lower: Target MSW code of the last emergency occurs |

When there are no emergency, data 00 will be written in the above addresses (10 to 1B). When the first emergency occurs, the data corresponding to the emergency will be written in the address (10 to 13) for this first emergency. In the same way, when the second emergency occurs, the data corresponding to the emergency will be written in the address (14 to 17) for this second emergency.
The data corresponding to the emergency occurring the last will be written in the address (18 to 1B) for this last emergency.
Therefore the data of addresses 18 to 1B are renewed each time an emergency occurs.

**Note 1:** Be sure to rewrite the data of addresses 10 to 1B to 00 after repairs/adjustments.

**Note 2:** When rewriting the data, be sure to press the PAUSE buttton of the remote commander after setting the data.

### 2-1. EMG CODE (Emergency Code)

The codes shown in the following table which correspond to errors that occur are recorded in addresses 10, 14, and 18.

| Code | Type of Emergency |
|---|---|
| 00 | No error |
| 10 | Loading motor time-out during load |
| 11 | Loading motor time-out during unload |
| 20 | T reel emergency (reel slack) during unloading |
| 21 | S reel emergency (reel slack) during unloading |
| 22 | T reel emergency |
| 23 | S reel emergency |
| 30 | FG emergency at the start up of the capstan |
| 31 | FG emergency during the normal rotation of the capstan |
| 40 | FG emergency at the start up of the drum |
| 41 | PG emergency at the start up of the drum |
| 42 | FG emergency during the normal rotation of the drum |
| 43 | PG emergency during the normal rotation of the drum |
| 44 | Phase emergency during the normal rotation of the drum |

### 2-2. MSW Codes

- The lower parts of the data of addresses 12, 16 and 1A represent the MSW codes (mode switch, mechanism position) when errors occurs.
- The upper parts of the data of addresses 12, 16 and 1A represent, when the mechanism position is to be moved, the MSW codes at the start of movement (when moving the loading motor).
- The lower parts of the data of addresses 13, 17 and 1B represent the MSW codes of the desired movement when the mechanism position is to be moved.

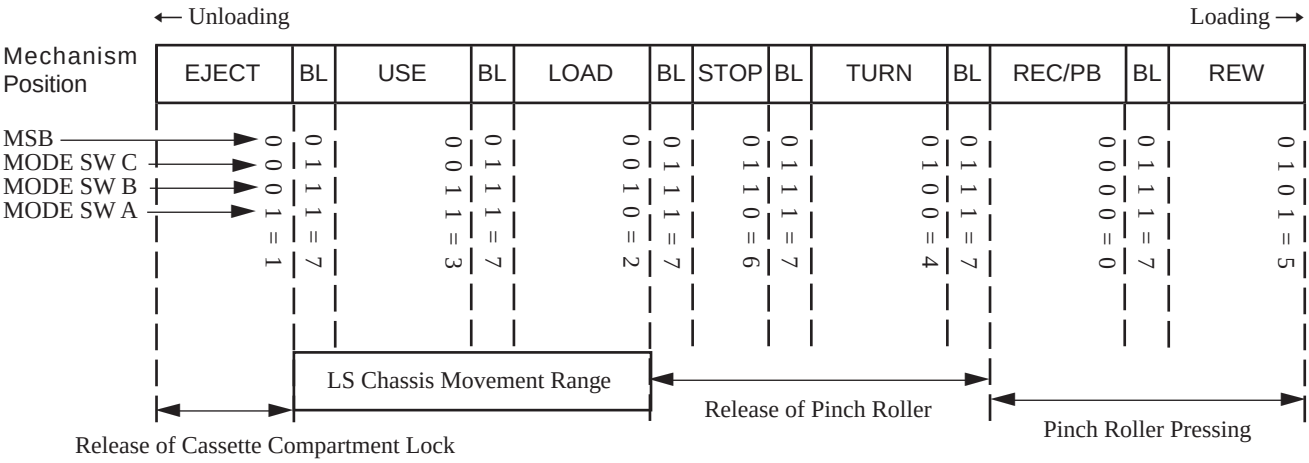


| Mechanism Position | MSW Code | Contents |
|---|---|---|
| EJECT | 1 | Position at which the cassette compartment lock is released. The mechanism will not move any further in the unloading direction. |
| BL | 7 | BLANC code. Between two codes. The mechanism will not be stopped by this code while it is operating. |
| USE | 3 | EJECT completion position. When the cassette is ejected, the mechanism will stop at this position. |
| LOAD | 2 | Code during loading/unloading. Code that is used while the LS chassis is moving. |
| STOP | 6 | Normal stop position. The pinch roller separates, the tension regulator returns, and the brakes of both reels turn on. |
| TURN | 4 | Position at which is used when the pendulum gear swings from S to T or from T to S. |
| RECP/PB | 0 | PB, REC, CUE, REV, PAUSE, FF positions.<br>The pinch roller is pressed and tension regulator is on. |
| REW | 5 | REW position. REW are carried at this position.<br>The mechanism will not move any further in the loading direction. |

### 3. Bit value discrimination

Bit values must be discriminated using the display data of the adjusting remote commander for the following items. Use the table below to discriminate if the bit value is “1” or “0”.

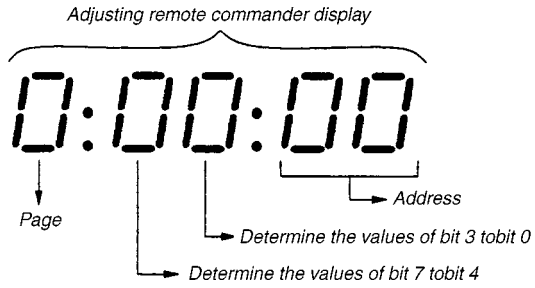


| | Remote controller display | Bit value | | | |
|---|---|---|---|---|---|
| | | bit 3 or bit 7 | bit 2 or bit 6 | bit 1 or bit 5 | bit 0 or bit 4 |
| | 0 | 0 | 0 | 0 | 0 |
| | 1 | 0 | 0 | 0 | 1 |
| | 2 | 0 | 0 | 1 | 0 |
| | 3 | 0 | 0 | 1 | 1 |
| | 4 | 0 | 1 | 0 | 0 |
| | 5 | 0 | 1 | 0 | 1 |
| | 6 | 0 | 1 | 1 | 0 |
| | 7 | 0 | 1 | 1 | 1 |
| Ⓐ→ | 8 | 1 | 0 | 0 | 0 |
| | 9 | 1 | 0 | 0 | 1 |
| | A (R) | 1 | 0 | 1 | 0 |
| | B (b) | 1 | 0 | 1 | 1 |
| | C (c) | 1 | 1 | 0 | 0 |
| | D (d) | 1 | 1 | 0 | 1 |
| Ⓑ→ | E (E) | 1 | 1 | 1 | 0 |
| | F (F) | 1 | 1 | 1 | 1 |

**(Example)** If the remote commander display data is “8E”, bit values from bit7 to bit4 can be discriminated from column Ⓐ, and those from bit3 to bit0 from column Ⓑ.

### 4. Switch check (1)

| Page 3 | Address 43 |
|---|---|

| Bit | Function | When bit value=1 | When bit value=0 |
|---|---|---|---|
| 0 | VTR MODE SW | OFF | ON |
| 1 | CAM MODE SW | OFF | ON |
| 2 | START/STOP SW | OFF | ON |
| 3 | EJECT SW | OFF | ON |
| 4 | CC DOWN SW | OFF | ON |
| 5 | | | |
| 6 | | | |
| 7 | | | |

Using method:

1) Select page: 3, address: 43.
2) By discriminating the bit value of display data, the state of the switches can be discriminated.

### 5. Switch check (2)

| Page 3 | Address 60 to 66 |
|---|---|

Using method:
1) Select page: 3, address: 60 to66.
2) By discriminating the display data, the pressed key can be discriminated.

| Address | Data | | | | | | | |
|---|---|---|---|---|---|---|---|---|
| | 00 to 0D | 0E to 29 | 2A to 46 | 47 to 68 | 69 to 90 | 91 to BE | BF to EA | EB to FF |
| 60 (AD0: IC604 ⑨③) | LASER LINK (FK-8500 S008) | STOP (FK-8500 S001) | FF (FK-8500 S003) | REC (FK-8500 S005, 007) | EDIT SEARCH (+) (FK8500 S009) | EDIT SEARCH (–) (FK8500 S010) | | No key input |
| 61 (AD1: IC604 ⑨④) | PHOTO REC (SS-8500 S004) | PAUSE (FK-8500 S002) | REW (FK-8500 S004) | PLAY (FK-8500 S006) | | | | No key input |
| 62 (AD2: IC604 ⑨⑤) | DIGITAL EFFECT (CF-50/51 S001) | PICTURE EFFECT (CF-50/51 S006) | MENU (CF-50/51 S010) | EXECUTE (CF-50/51 S015) | TIME (CF-50/51 S021) | 5sec REC (CF-50/51 S024) | PUSHING REC (CF-50/51 S024) | NORMAL REC (CF-50/51 S024) |
| 64 (AD4: IC604 ⑨⑦) | | | EXPOSURE (CF-50/51 S012) | BACK LIGHT (CF-50/51 S017) | FADER (CF-51 S027 or MF-8500 S002) | FOCUS INFINITY (MF/MR-8500 S001) | FOCUS AUTO (MF/MR-8500 S001) | FOCUS MANUAL (MF/MR-8500 S001) |
| 65 (AD5: IC604 ⑨⑧) | DATE (CF-50/51 S003) | COUNTER RESET (CF-50/51 S008) | END SEARCH (CF-50/51 S013) | TITLE (CF-50/51 S018) | DISPLAY (CF-50/51 S022) | | | No key input |
| 66 (AD6: IC604 ⑨⑨) | PROGRAM AE (CF-50/51 S004) | BRIGHT(+) (PD-92 S5801 PD-93 S4801) | BRIGHT(–) (PD-92 S5802 PD-93 S4802) | VOLUME(+) (PD-92 S5803 PD-93 S4803) | VOLUME(–) (PD-92 S5804 PD-93 S4804) | PANEL REVERSE (FP-642) | PANEL CLOSE (FP-642) | PANEL NORMAL (FP-642) |

### 6. Headphone jack check

| Page 3 | Address 45 |
|---|---|

| Bit | Function | When bit value=1 | When bit value=0 |
|---|---|---|---|
| 1 | Headphone jack | Headphone jack is used | |

Using method:
1) Select page: 3, address: 45.
2) By discriminating the bit value of display data, the state of the headphone jack can be discriminated.

### 7. Input/output selection check

| Page 3 | Address 49 |
|---|---|

| Bit | Function | When bit value=1 | When bit value=0 |
|---|---|---|---|
| 1 | | | |
| 2 | | | |
| 3 | | | |
| 4 | MIC jack | | MIC jack is used |
| 5 | AUDIO terminal | Monaural | Stereo |
| 6 | VIDEO terminal | VIDEO terminal is used | |
| 7 | S VIDEO terminal | | S VIDEO terminal is used |

Using method:
1) Select page: 3, address: 49.
2) By discriminating the bit value of display data, the state of the input/output selection can be discriminated.

### 8. LED, LCD (display window) check

| Page 3 | Address 05 | Bit5 |
|---|---|---|

Using method:
1) Select page: 3, address: 05, and set the bit value of Bit5 to “1”.
2) Check that all LED are lit and all segments of LCD (display window) are lit.
3) Select page: 3, address: 05, and set the bit value of Bit5 to “0”.

### 9. Record of Use Check

| Page 3 | Address A2 to AA |
|---|---|

| Address | Function | | Remarks |
|---|---|---|---|
| A2 | Drum rotation counted time (BCD code) | Hour (H) | 1000th place digit and 100th place digit of counted time (decimal digit) |
| A3 | | Hour (L) | 10th place digit and 1st place digit of counted time (decimal digit) |
| A4 | | Minute | |
| A5 | User initial power on date (BCD code) | Year | After setting the clock, set the date of power on next |
| A6 | | Month | |
| A7 | | Day | |
| A8 | Final condensation occurrence date (BCD code) | Year | |
| A9 | | Month | |
| AA | | Day | |

Using method:
1) The record of use data is displayed at page 3, addresses: A2 to AA.

**Note:** This data will be erased when the coin lithium battery is removed (reset).

## 3-2. SYSTEM CONTROL SYSTEM ADJUSTMENT

### 1. Initialization of D, E, F Page Data

If the D, E, F page data is erased due to some reason, perform "1-2. INITIALIZATION OF D, E, F PAGE DATA", of "5-1. CAMERA SECTION ADJUSTMENT".

### 2. Battery End Adjustment (VC-195 board)

Set the battery end voltage.
If the voltage is incorrect, the life of the battery will shorten.
The image at the battery end will also be rough.

| | |
|---|---|
| Mode | Camera recording |
| Subject | Arbitrary |
| Measurement Point | LCD display of the adjusting remote commander |
| Measuring Instrument | |
| Adjustment Page | D |
| Adjustment Address | 30 to 34 |

**Note 1:** The lens block and cabinet (R) must be connected.

Switch setting
1) AUTO FOCUS ..... OFF
2) LCD screen ..... Closed
3) NIGHT SHOT ..... OFF
(NIGHT SHOT model)

Connection:
1) Connect the regulated power supply and the digital voltmeter to the battery terminal as shown in Fig. 5-3-4.

Adjusting method:
1) Adjust the output voltage of the regulated power supply so that the digital voltmeter display is 6.1±0.1Vdc.
2) Turn off the power supply.
3) Turn on the HOLD switch of the adjusting remote commander.
4) Turn on the power supply.
5) Load a cassette, and set to the camera recording mode.
6) Select page: 0, address: 01, and set data: 01.
7) Decrease the output voltage of the regulated power supply so that the digital voltmeter display is 5.30±0.01Vdc.
8) Select page: 3, address: 5D, read the data, and this data is named Dref.
9) Select page: D, address: 30, set data: Dref, and then press the PAUSE button of the adjusting remote commander.
10) Convert Dref to decimal notation, and obtain Dref '. (Refer to Table 5-1-2. "Hexadecimal-decimal conversion table")
11) Calculate $D_{31}$', $D_{32}$', $D_{33}$' and $D_{34}$' using following equations (decimal calculation), convert it to a hexadecimal number, and input each adjustment address.
    Address: 31 $D_{31}$' = Dref ' + 5
    Address: 32 $D_{32}$' = Dref ' + 32
    Address: 33 $D_{33}$' = Dref ' + 53
    Address: 34 $D_{34}$' = Dref ' + 64

**Note 3:** After setting each data, be sure to press the PAUSE button.

12) Select page: 0, address: 01, and set data: 00.

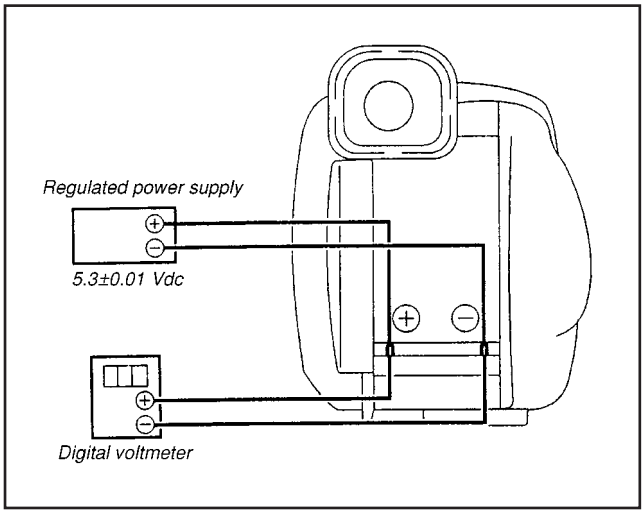


*Fig. 5-3-4.*

## 3-3. SERVO SYSTEM ADJUSTMENTS

### 1. CAP FG Offset Adjustment (VC-195 board)

Improve the capstan servo characteristic. If it is not correct. jitters will increase.

| | |
|---|---|
| Mode | Camera recording (SP mode) |
| Subject | Arbitrary |
| Measurement Point | Pin ⑫ of CN910 (CAP FG) |
| Measuring Instrument | Oscilloscope |
| Adjustment Page | F |
| Adjustment Address | 69 |
| Specified value | Duty = 50±1% |

Adjusting method:

1) Select page: 0, address: 01, and set data: 01.
2) Select page: 2, address: 01, and set data: 81, and press the PAUSE button of the adjustment remote commander. (to start up automatic CAP FG offset adjustment.)
3) Select page: 2, address: 02, and check that the data is "01".
4) Check that Duty of CAP FG signal satisfies the specified value. If not, select page: 2, address: 01, set data: 00, and press the PAUSE button, and then, repeat steps 2) to 4).
5) Select page: 2, address: 01, and set data: 00, and press the PAUSE button of the adjustment remote commander.
6) Select page: 0, address: 01, and set data: 00.

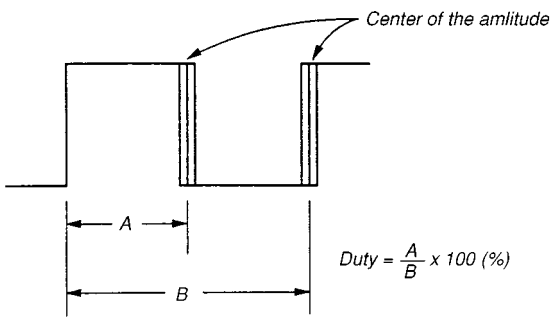


*Fig. 5-3-5.*

### 2. Switching Position Adjustment (VC-195 Board)

If deviated in this case causes switching noise or jitter on the played back screen.

| | |
|---|---|
| Mode | Playback |
| Signal | Alignment tape:<br>For tracking adjustment<br>(WR5-1NP (NTSC))<br>(WR5-1CP (PAL)) |
| Measurement Point | CH1: Pin ⑪ of CN910 (RF SWP)<br>CH2: Pin ⑥ of CN910 (PB RF) |
| Measuring Instrument | Oscilloscope |
| Adjustment Page | F |
| Adjustment Address | 7C, 7D |
| Specified Value | t1 = 0±10µsec |

**Note 1:** NTSC model : CCD-TRV75/TRV75PK/TRV715
PAL model : CCD-TRV3E/TRV13E/TRV23E/
TRV45E/TRV55E/TRV65E/TRV69E

Adjusting Method:

1) Select page: 0, address: 01, and set data: 01.
2) Select page: F, address: 2A, and set data: 20, and press the PAUSE button of the adjustment remote commander.
3) Select page: F, address: 7C, change the data and minimize "t1", and then press the PAUSE button of the adjustment remote commander. (Coarse adjustment)
4) Select page: F, address: 7D, change the data and adjust so that the switching position (t1) becomes the specified value. (Fine adjustment)
5) Press the PAUSE button of the adjustment remote commander.
6) Select page: F, address: 2A, and set data: 00, and press the PAUSE button of the adjustment remote commander.
7) Select page: 0, address: 01, and set data: 00.

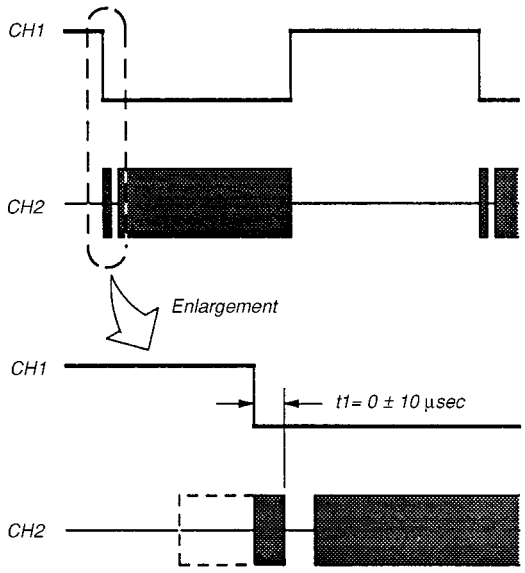


*Fig. 5-3-6.*

### 3. NTSC LP Mode Switching Position Adjustment (VC-195 Board) (CCD-TRV75/TRV75PK/TRV715)

If deviated in this case causes switching noise or jitter on the LP mode played back screen.

| | |
|---|---|
| Mode | Playback |
| Signal | Alignment tape:<br>For tracking adjustment<br>(WR5-1NP (NTSC)) |
| Measurement Point | CH1: Pin ⑪ of CN910 (RF SWP)<br>CH2: Pin ⑥ of CN910 (PB RF) |
| Measuring Instrument | Oscilloscope |
| Adjustment Page | F |
| Adjustment Address | 7E, 7F |
| Specified Value | t1 = 0±10µsec |

Adjusting Method:

1) Select page: 0, address: 01, and set data: 01.
2) Select page: F, address: 2A, set data: 60, and then press the PAUSE button of the adjustment remote commander.
3) Select page: F, address: 7E, change the data and minimize "t1", and then press the PAUSE button of the adjustment remote commander. (Coarse adjustment)
4) Select page: F, address: 7F, change the data and adjust so that the switching position (t1) becomes the specified value. (Fine adjustment)
5) Select page: F, address: 2A, set data: 00, and then press the PAUSE button of the adjustment remote commander.
6) Press the PAUSE button of the adjustment remote commander.
7) Select page: 0, address: 01, and set data: 00.

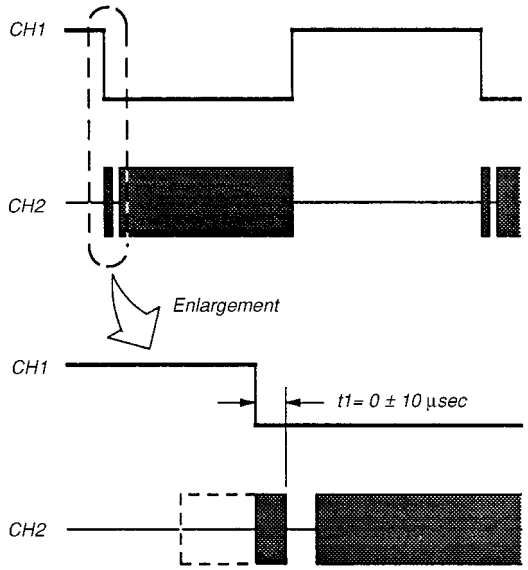


*Fig. 5-3-7.*

## 3-4. VIDEO SYSTEM ADJUSTMENTS

Video system adjustments must be performed in the following order.

[Adjusting Order]

1. 28MHz origin oscillation adjustment
2. AFC f0 adjustment
3. Filter f0 adjustment
4. Y OUT level adjustment
5. C OUT level adjustment
6. RP filter f0 adjustment
7. Hi8 REC Y current adjustment
8. Standard REC Y current adjustment
9. Hi8 REC L level adjustment
10. Standard8 REC L level adjustment
11. REC C current adjustment

### 1. 28 MHz Origin Oscillation Adjustment (VC-195 board)

Set the frequency of the clock for synchronization.
If deviated, the synchronization will be disrupted and the color will become inconsistent.

| | |
|---|---|
| Mode | VTR stop |
| Signal | No signal |
| Measurement Point | Pin ㊻ of IC202 or pin ⑫ of IC501 |
| Measuring Instrument | Frequency counter |
| Adjustment Page | F |
| Adjustment Address | 2C |
| Specified Value | Pin ㊻ of IC202 :<br>f=3579545±17Hz (NTSC)<br>f=4433618.75±17Hz (PAL)<br>Pin ⑫ of IC501 :<br>f=14318181±68Hz (NTSC)<br>f=14187500±55Hz (PAL) |

**Note 1:** NTSC model : CCD-TRV75/TRV75PK/TRV715
PAL model : CCD-TRV3E/TRV13E/TRV23E/TRV45E/TRV55E/TRV65E/TRV69E

Adjusting method:

1) Select page: 0, address: 01, and set data: 01.
2) Select page: 3, address: 01, set data: 41, and press the PAUSE button of the adjusting remote commander.
3) Select page: 2, address: 61, and set data: 30.
4) Select page: F, address: 2C, change the data and set the clock frequency(f) to the specified value.
5) Press the PAUSE button of the adjusting remote commander.
6) Select page: 2, address: 61, and set data: 10.
7) Select page: 3, address: 01, set data: 00, and press the PAUSE button of the adjusting remote commander.
6) Select page: 0, address: 01, and set data: 00.

### 2. AFC f0 Adjustment (VC-195 board)

Adjust the pull-in range of the A/D converted clock generator during playback.

| | |
|---|---|
| Mode | VTR stop |
| Signal | No signal |
| Measurement Point | Pin ④ of CN910 (AGC f0) |
| Measuring Instrument | Digital voltmeter |
| Adjustment Page | F |
| Adjustment Address | 4A |
| Specified Value | A = 2.10±0.05Vdc |

Adjusting method:

1) Select page: 0, address: 01, and set data: 01.
2) Select page: 3, address: 01, set data: 4D, and press the PAUSE button of the adjusting remote commander.
3) Select page: F, address: 4A, change the data and set the DC voltage (A) to the specified value.
4) Press the PAUSE button of the adjusting remote commander.
5) Select page: 3, address: 01, set data: 00, and press the PAUSE button of the adjusting remote commander.
6) Select page: 0, address: 01, and set data: 00.

### 3. Filter f0 Adjustment (VC-195 board)

Minimize the chroma signal residual components during composite video signal input.

| | |
|---|---|
| Mode | VTR stop |
| Signal | No signal |
| Measurement Point | Pin ③ of CN910 (IR VIDEO) |
| Measuring Instrument | Oscilloscope |
| Adjustment Page | F |
| Adjustment Address | 4D |
| Specified Value | Minimum residual chroma signal components (A = Bellow 12mV) |

Switch setting:

LASER LINK ..... ON (Red LED is lit)

Adjusting method:

1) Select page: 0, address: 01, and set data: 01.
2) Select page: 3, address: 01, set data: 4F, and press the PAUSE button of the adjusting remote commander.
3) Select page: F, address: 4D, change the data and minimize the residual chroma signal components (A).
4) Press the PAUSE button of the adjusting remote commander.
5) Select page: 3, address: 01, set data: 00, and press the PAUSE button of the adjusting remote commander.
6) Select page: 0, address: 01, and set data: 00.

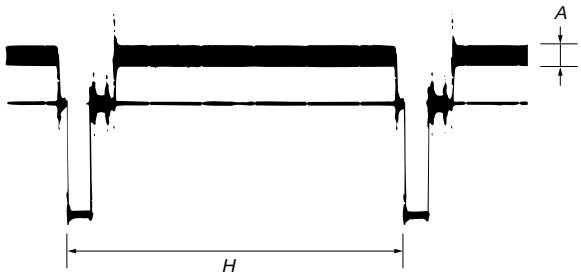


***Fig. 5-3-8.***

### 4. Y OUT Level Adjustment (VC-195 board)

Set the Y signal output level.

| | |
|---|---|
| Mode | VTR stop |
| Signal | No signal |
| Measurement Point | Hi8 model :<br>Y signal terminal of S VIDEO terminal (75Ω terminated )<br>Standard 8 model :<br>VIDEO terminal (75Ω terminated ) |
| Measuring Instrument | Oscilloscope |
| Adjustment Page | F |
| Adjustment Address | 49 |
| Specified Value | A = 286±5mV (NTSC)<br>A = 300±5mV (PAL) |

**Note 1:** Insert the plug into the S video terminal (Hi8 model)

Adjusting method:

1) Select page: 0, address: 01, and set data: 01.
2) Select page: 3, address: 01, set data: 41, and press the PAUSE button of the adjusting remote commander.
3) Select page: 2, address: 61, and set data: 30.
4) Select page: F, address: 49, change the data and set the SYNC level (A) to the specified value.
5) Press the PAUSE button of the adjusting remote commander.
6) Select page: 2, address: 61, and set data: 10.
7) Select page: 3, address: 01, set data: 00, and press the PAUSE button of the adjusting remote commander.
8) Select page: 0, address: 01, and set data: 00.

Hi8 model

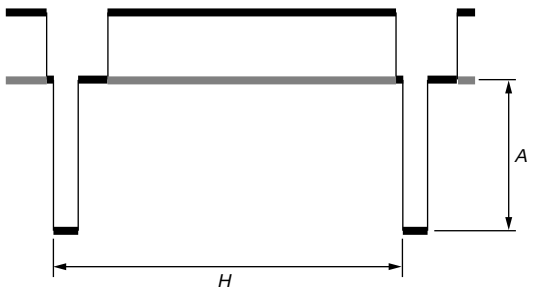


Standard 8 model

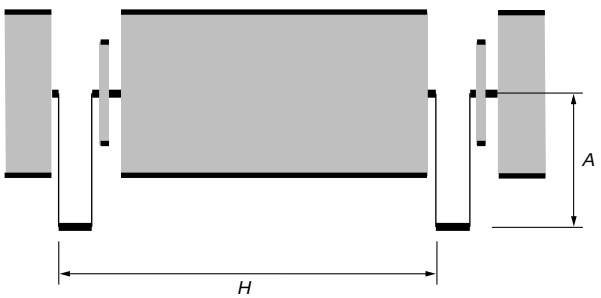


*Fig. 5-3-9.*

### 5. C OUT Level Adjustment (VC-195 board)

Set the chroma signal output level.

| | |
|---|---|
| Mode | VTR stop |
| Signal | No signal |
| Measurement Point | Hi8 model :<br>Chroma signal terminal of S VIDEO terminal (75Ω terminated )<br>Standard 8 model :<br>VIDEO terminal (75Ω terminated ) |
| Measuring Instrument | Oscilloscope |
| Adjustment Page | F |
| Adjustment Address | 4B |
| Specified Value | A = 286±5mV (NTSC)<br>A = 300±5mV (PAL) |

**Note 1:** Insert the plug into the S video terminal (Hi8 model)

Adjusting method:

1) Select page: 0, address: 01, and set data: 01.
2) Select page: 3, address: 01, set data: 41, and press the PAUSE button of the adjusting remote commander.
3) Select page: 2, address: 61, and set data: 30.
4) Select page: F, address: 4B, change the data and set the burst level (A) to the specified value.
5) Press the PAUSE button of the adjusting remote commander.
6) Select page: 2, address: 61, and set data: 10.
7) Select page: 3, address: 01, set data: 00, and press the PAUSE button of the adjusting remote commander.
8) Select page: 0, address: 01, and set data: 00.

Hi8 model

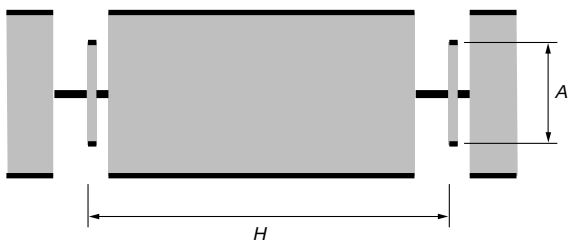


Standard 8 model

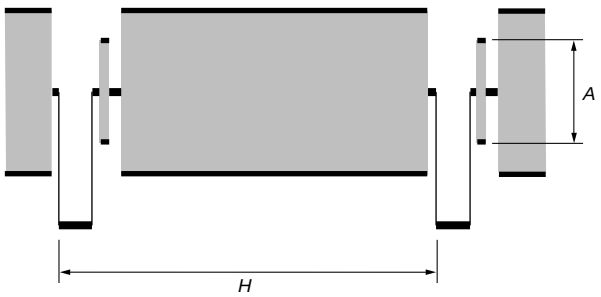


*Fig. 5-3-10.*

### 6. RP Filter f0 Adjustment (VC-195 board)

Adjust the LPF of the playback RF amplifier.

| | |
|---|---|
| Mode | VTR stop |
| Signal | No signal |
| Measurement Point | Pin ⑨ of CN910 (RF AGC OUT) |
| Measuring Instrument | Oscilloscope |
| Adjustment Page | F |
| Adjustment Address | 4E |
| Specified Value | A = Below 10mVp-p |

Connection:

1) Input a 14.2MHz, 400mVp-p CW signal to Pin ⑦ of CN910 (RF AGC IN).

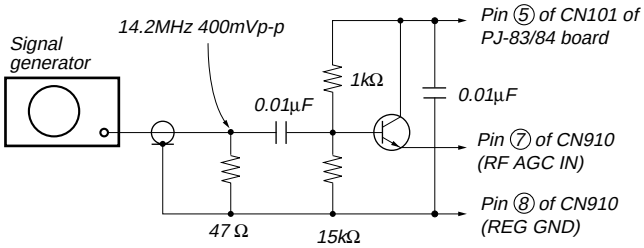


*Transistor : General NPN transistor (2SC403. etc)*
*47Ω resistor : 1-249-401-11*
*1kΩ resistor : 1-249-417-11*
*15kΩ resistor : 1-249-431-11*
*0.01µF capacitor : 1-101-004-00*

***Fig. 5-3-11.***

Adjusting method:

1) Select page: 0, address: 01, and set data: 01.
2) Select page: 3, address: 01, set data: 35, and press the PAUSE button of the adjusting remote commander.
3) Only for Standard8 model, select page: D, address: 15, after memorizing the data , set the bit value of bit0 to “1”. (Refer to “3. Bit value discrimination” of “3-1-8. Service mode”).
4) Select page: F, address: 4E, change the data and minimize the 14.2 MHz signal level (A).
5) Press the PAUSE button of the adjusting remote commander.
6) Select page: D, address: 15, and set the data memorized at step 3), and press the PAUSE button of the adjusting remote commander..
7) Select page: 3, address: 01, set data: 00, and press the PAUSE button of the adjusting remote commander.
8) Select page: 0, address: 01, and set data: 00.

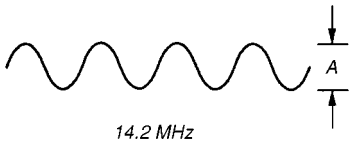


***Fig. 5-3-12.***

### 7. Hi8 REC Y Current Adjustment (VC-195 board) (CCD-TRV65E/TRV69E/TRV75/TRV75PK/TRV715)

Adjust the Y FM signal recording current.

| | |
|---|---|
| Mode | VTR recording (SP mode) |
| Signal | No signal |
| Measurement Point | Pin ⑩ of CN910 (REC RF) |
| Measuring Instrument | Oscilloscope<br>(20 MHz BW LIMIT: OFF) |
| Adjustment Page | F |
| Adjustment Address | 53 to 5A |
| Specified Value | A = 160±5mV (NTSC)<br>A = 185±5mV (PAL) |

**Note 1:** NTSC model : CCD-TRV75/TRV75PK/TRV715
PAL model : CCD-TRV65E/TRV69E

Preparations only for the model without REC switch:

1) Select page: 0, address: 01, and set data: 01.
2) Select page: D, address: 14, after memorizing the data, set the bit value of bit1 to "1". (Refer to "3. Bit value discrimination" of "3-1-8. Service mode").
3) Select page: D, address: 15, after memorizing the data , set the bit value of bit7 to "0".
4) Set to recording mode. (Use the wireless remote commander of 8mm VCR, or connect Pin ⑥ of CN935 of DD-95 board and GND with 4.7kΩ registor for a second.)
   4.7kΩ registor : 1-249-425-11

Adjusting method:

1) Insert a tape, set to recording mode.
2) Select page: 0, address: 01, and set data: 01.
3) Select page: F, address: 5C, after note down the data , set data: FF, and press the PAUSE button of the adjusting remote commander.
4) Select page: F, address: 65, after note down the data , set data: 00, and press the PAUSE button of the adjusting remote commander.
5) Select page: 3, address: 01, set data: 41, and press the PAUSE button of the adjusting remote commander.
6) Select page: F, address: 54, change the data and set the Y signal level (A) to the specified value.
7) Press the PAUSE button of the adjusting remote commander.
8) Select page: F, address: 54, and read the data ($D_{54}$).
9) Calculate the adjustment data (hexadecimal) from the following equations (hexadecimal calculation), and input each adjustment address. (Refer to Table 5-1-2. Hexadecimal-Decimal conversion Table.)
   NTSC model
   Address: 53 $D_{53} = D_{54}$
   Address: 55 $D_{55} = D_{54} + 10$
   Address: 56 $D_{56} = D_{54} + 10$
   PAL model
   Address: 53 $D_{53} = D_{54}$
   Address: 55 $D_{55} = D_{54}$
   Address: 56 $D_{56} = D_{54}$

**Note:** After setting each data, be sure to press the PAUSE button of the adjusting remote commander.

10) Write the following data in page: F, address: 57 to 5A.

| Address | Data |
|---|---|
| 57 | A0 (NTSC), A1 (PAL) |
| 58 | 80 (NTSC), 95 (PAL) |
| 59 | 90 (NTSC), A1 (PAL) |
| 5A | 80 (NTSC), 95 (PAL) |

**Note:** After setting each data, be sure to press the PAUSE button of the adjusting remote commander.

11) Select page: F, address: 5C, set the data noted down at step 3), press the PAUSE button of the adjusting remote commander.
12) Select page: F, address: 65, set the data noted down at step 4), press the PAUSE button of the adjusting remote commander.
13) Select page: 3, address: 01, set data: 00, and press the PAUSE button of the adjusting remote commander.
14) Select page: 0, address: 01, and set data: 00.

Processing after completed adjustment: only for the model without REC switch:

1) Select page: 0, address: 01, and set data: 01.
2) Select page: D, address: 14, and set the data memorized at step 2) of "Preparations only for the model without REC switch".
3) Press the PAUSE button of the adjusting remote commander.
4) Select page: D, address: 15, and set the data memorized at step 3) of "Preparations only for the model without REC switch".
5) Press the PAUSE button of the adjusting remote commander.
6) Select page: 0, address: 01, and set data: 00.

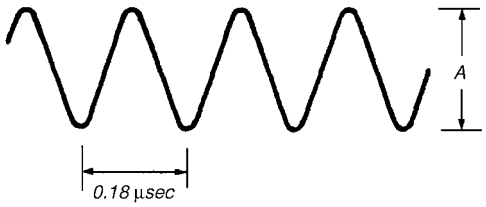


***Fig. 5-3-13.***

### 8. Standard8 REC Y Current Adjustment (VC-195 board) (CCD-TRV3E/TRV13E/TRV23E/TRV45E/TRV55E)

Adjust the Y FM signal recording current.

| | |
|---|---|
| Mode | VTR recording (SP mode) |
| Signal | No signal |
| Measurement Point | Pin ⑩ of CN910 (REC RF) |
| Measuring Instrument | Oscilloscope<br>(20 MHz BW LIMIT: OFF) |
| Adjustment Page | F |
| Adjustment Address | 53 to 5A |
| Specified Value | A = 185±5mV |

Preparations only for the model without REC switch:

1) Select page: 0, address: 01, and set data: 01.
2) Select page: D, address: 14, after memorizing the data, set the bit value of bit1 to "1". (Refer to "3. Bit value discrimination" of "3-1-8. Service mode").
3) Select page: D, address: 15, after memorizing the data , set the bit value of bit7 to "0".
4) Set to recording mode. (Use the wireless remote commander of 8mm VCR, or connect Pin ⑥ of CN935 of DD-95 board and GND with 4.7kΩ registor for a second.)
   4.7kΩ registor : 1-249-425-11

Adjusting method:

1) Insert a tape, set to recording mode.
2) Select page: 0, address: 01, and set data: 01.
3) Select page: F, address: 5C, after note down the data , set data: FF, and press the PAUSE button of the adjusting remote commander.
4) Select page: F, address: 65, after note down the data , set data: 00, and press the PAUSE button of the adjusting remote commander.
5) Select page: 3, address: 01, set data: 41, and press the PAUSE button of the adjusting remote commander.
6) Select page: F, address: 54, change the data and set the Y signal level (A) to the specified value.
7) Press the PAUSE button of the adjusting remote commander.
8) Select page: F, address: 54, and read the data ($D_{54}$).
9) Calculate the adjustment data (hexadecimal) from the following equations (hexadecimal calculation), and input each adjustment address. (Refer to Table 5-1-2. Hexadecimal-Decimal conversion Table.)
   Address: 53 $D_{53} = D_{54}$
   Address: 55 $D_{55} = D_{54}$
   Address: 56 $D_{56} = D_{54}$

**Note:** After setting each data, be sure to press the PAUSE button of the adjusting remote commander.

10) Write the following data in page: F, address: 57 to 5A.

| Address | Data |
|---|---|
| 57 | 80 |
| 58 | 80 |
| 59 | 80 |
| 5A | 80 |

**Note:** After setting each data, be sure to press the PAUSE button of the adjusting remote commander.

11) Select page: F, address: 5C, set the data noted down at step 3), press the PAUSE button of the adjusting remote commander.
12) Select page: F, address: 65, set the data noted down at step 4), press the PAUSE button of the adjusting remote commander.
13) Select page: 3, address: 01, set data: 00, and press the PAUSE button of the adjusting remote commander.
14) Select page: 0, address: 01, and set data: 00.

Processing after completed adjustment: only for the model without REC switch:

1) Select page: 0, address: 01, and set data: 01.
2) Select page: D, address: 14, and set the data memorized at step 2) of "Preparations only for the model without REC switch".
3) Press the PAUSE button of the adjusting remote commander.
4) Select page: D, address: 15, and set the data memorized at step 3) of "Preparations only for the model without REC switch".
5) Press the PAUSE button of the adjusting remote commander.
6) Select page: 0, address: 01, and set data: 00.

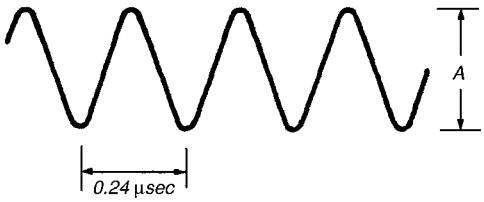


***Fig. 5-3-14.***

### 9. Hi8 REC L Level Adjustment (VC-195 board) (CCD-TRV65E/TRV69E/TRV75/TRV75PK/TRV715)

Set the recording levels of the REC AFM signal and REC ATF signal. If the level is too low, the audio S/N will deteriorated, tracking will not be stable, or SP/LP will not be discriminated properly. If too high, color beets will be produced on the self-recording/playback image.

| | |
|---|---|
| Mode | VTR recording (SP mode) |
| Signal | No signal |
| Measurement Point | Pin ⑩ of CN910 (REC RF) |
| Measuring Instrument | Oscilloscope<br>(20MHz BW LIMIT: OFF) |
| Adjustment Page | F |
| Adjustment Address | 5B to 64 |
| Specified Value | A = 10.1±0.6mV (NTSC)<br>A = 11.0±0.7mV (PAL) |

**Note 1:** Do not insert a plug into the AUDIO (R) terminal.
**Note 2:** NTSC model : CCD-TRV75/TRV75PK/TRV715
PAL model : CCD-TRV65E/TRV69E

Connection:

1) Remove C085 (0.01µF, Pin ⑯ of IC202).

**Note:** After completing "REC L Level Adjustment" and "REC C Current Adjustment", replace C085 with new parts (1-162-970-11 CERAMIC CHIP 0.01µF 10% 25V).

Preparations only for the model without REC switch:

1) Insert Hi8 ME tape.
2) Select page: 0, address: 01, and set data: 01.
3) Select page: D, address: 14, after memorizing the data, set the bit value of bit1 to "1". (Refer to "3. Bit value discrimination" of "3-1-8. Service mode").
4) Select page: D, address: 15, after memorizing the data , set the bit value of bit7 to "0".
5) Set to recording mode. (Use the wireless remote commander of 8mm VCR, or connect Pin ⑥ of CN935 of DD-95 board and GND with 4.7kΩ registor for a second.)
   4.7kΩ registor : 1-249-425-11

Adjusting method:

1) Insert Hi8 ME tape, set to recording mode.
2) Select page: 0, address: 01, and set data: 01.
3) Select page: F, address: 5B, set data: FF, and press the PAUSE button of the adjusting remote commander.
4) Select page: F, address: 65, set data: 00, and press the PAUSE button of the adjusting remote commander.
5) Select page: F, address: 5C, change the data and set the REC AFM signal level (A) to the specified value.
6) Press the PAUSE button of the adjusting remote commander.
7) Select page: F, address: 5C, read the data ($D_{5C}$).
8) Calculate the adjustment data (hexadecimal) from the following equations (hexadecimal calculation), and input each adjustment address. (Refer to Table 5-1-2. Hexadecimal-Decimal conversion Table.)

   NTSC model
   - Address: 5B $D_{5B} = D_{5C}$
   - Address: 5D $D_{5D} = D_{5C} - 0C$
   - Address: 5E $D_{5E} = D_{5C} - 0C$
   - Address: 5F $D_{5F} = D_{5C} + 12$
   - Address: 60 $D_{60} = D_{5C} + 12$
   - Address: 61 $D_{61} = D_{5C} + 13$
   - Address: 62 $D_{62} = D_{5C} + 13$

   PAL model
   - Address: 5B $D_{5B} = D_{5C}$
   - Address: 5D $D_{5D} = D_{5C}$
   - Address: 5E $D_{5E} = D_{5C}$
   - Address: 5F $D_{5F} = D_{5C} + 12$
   - Address: 60 $D_{60} = D_{5C} + 12$
   - Address: 61 $D_{61} = D_{5C} + 12$
   - Address: 62 $D_{62} = D_{5C} + 12$

**Note:** After setting each data, be sure to press the PAUSE button of the adjusting remote commander.

9) Write the following data in page: F, address: 63 to 64.

| Address | Data |
|---|---|
| 63 | 7C (NTSC), 7A (PAL) |
| 64 | 78 (NTSC), 7A (PAL) |

**Note:** After setting each data, be sure to press the PAUSE button of the adjusting remote commander.

10) Select page: 0, address: 01, and set data: 00.
11) Perform "REC C Current Adjustment".

Processing after completed adjustment: only for the model without REC switch:

1) Select page: 0, address: 01, and set data: 01.
2) Select page: D, address: 14, and set the data memorized at step 3) of "Preparations only for the model without REC switch".
3) Press the PAUSE button of the adjusting remote commander.
4) Select page: D, address: 15, and set the data memorized at step 4) of "Preparations only for the model without REC switch".
5) Press the PAUSE button of the adjusting remote commander.
6) Select page: 0, address: 01, and set data: 00.

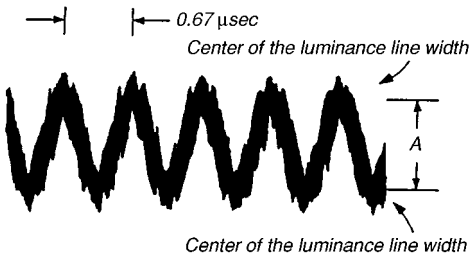


***Fig. 5-3-15.***

### 10. Standard8 REC L Level Adjustment (VC-195 board) (CCD-TRV3E/TRV13E/TRV23E/TRV45E/TRV55E)

Set the recording levels of the REC AFM signal and REC ATF signal. If the level is too low, the audio S/N will deteriorated, tracking will not be stable, or SP/LP will not be discriminated properly. If too high, color beets will be produced on the self-recording/playback image.

| | |
|---|---|
| Mode | VTR recording (SP mode) |
| Signal | No signal |
| Measurement Point | Pin ⑩ of CN910 (REC RF) |
| Measuring Instrument | Oscilloscope<br>(20MHz BW LIMIT: OFF) |
| Adjustment Page | F |
| Adjustment Address | 5B to 64 |
| Specified Value | A = 9.3±0.5mV |

**Note 1:** Do not insert a plug into the AUDIO (R) terminal.

Connection:

1) Remove C085 (0.01µF, Pin ⑯ of IC202).

**Note:** After completing "REC L Level Adjustment" and "REC C Current Adjustment", replace C085 with new parts (1-162-970-11 CERAMIC CHIP 0.01µF 10% 25V).

Preparations only for the model without REC switch:

1) Insert Srandrd8 MP tape.
2) Select page: 0, address: 01, and set data: 01.
3) Select page: D, address: 14, after memorizing the data, set the bit value of bit1 to "1". (Refer to "3. Bit value discrimination" of "3-1-8. Service mode").
4) Select page: D, address: 15, after memorizing the data , set the bit value of bit7 to "0".
5) Set to recording mode. (Use the wireless remote commander of 8mm VCR, or connect Pin ⑥ of CN935 of DD-95 board and GND with 4.7kΩ registor for a second.)
   4.7kΩ registor : 1-249-425-11

Adjusting method:

1) Insert Srandrd8 MP tape, set to recording mode.
2) Select page: 0, address: 01, and set data: 01.
3) Select page: F, address: 5B, set data: FF, and press the PAUSE button of the adjusting remote commander.
4) Select page: F, address: 65, set data: 00, and press the PAUSE button of the adjusting remote commander.
5) Select page: F, address: 5C, change the data and set the REC AFM signal level (A) to the specified value.
6) Press the PAUSE button of the adjusting remote commander.
7) Select page: F, address: 5C, read the data ($D_{5C}$).
8) Calculate the adjustment data (hexadecimal) from the following equations (hexadecimal calculation), and input each adjustment address. (Refer to Table 5-1-2. Hexadecimal-Decimal conversion Table.)

   Address: 5B $D_{5B} = D_{5C}$
   Address: 5D $D_{5D} = D_{5C}$
   Address: 5E $D_{5E} = D_{5C}$
   Address: 5F $D_{5F} = D_{5C}$
   Address: 60 $D_{60} = D_{5C}$
   Address: 61 $D_{61} = D_{5C}$
   Address: 62 $D_{62} = D_{5C}$

**Note:** After setting each data, be sure to press the PAUSE button of the adjusting remote commander.

9) Write the following data in page: F, address: 63 to 64.

| Address | Data |
|---|---|
| 63 | 80 |
| 64 | 80 |

**Note:** After setting each data, be sure to press the PAUSE button of the adjusting remote commander.

10) Select page: 0, address: 01, and set data: 00.
11) Perform "REC C Current Adjustment".

Processing after completed adjustment: only for the model without REC switch:

1) Select page: 0, address: 01, and set data: 01.
2) Select page: D, address: 14, and set the data memorized at step 3) of "Preparations only for the model without REC switch".
3) Press the PAUSE button of the adjusting remote commander.
4) Select page: D, address: 15, and set the data memorized at step 4) of "Preparations only for the model without REC switch".
5) Press the PAUSE button of the adjusting remote commander.
6) Select page: 0, address: 01, and set data: 00.

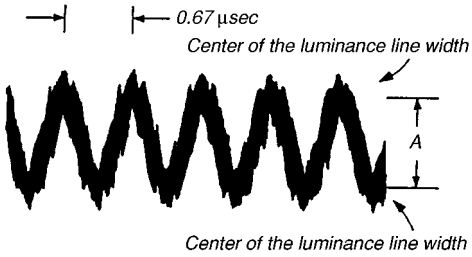


***Fig. 5-3-16.***

### 11. REC C Current Adjustment (VC-195 board)

Set the recording current levels of the REC Chroma signal. If it is too low, chroma signal noise in played back picture will increased. If too high, Y signal noises will increase and white modulation noises will be produced.

| | |
|---|---|
| Mode | VTR recording (SP mode) |
| Signal | No signal |
| Measurement Point | Pin ⑩ of CN910 (REC RF) |
| Measuring Instrument | Oscilloscope |
| Adjustment Page | F |
| Adjustment Address | 65 |
| Specified Value | Hi8 model :<br>A = 34.6±1.2mV (NTSC)<br>A = 35.7±1.2mV (PAL)<br>Standard8 model :<br>A = 30.0±1.1mV |

**Note 1:** NTSC Hi8 model: CCD-TRV75/TRV75PK/TRV715
PAL Hi8 model: CCD-TRV65E/TRV69E
PAL Standard8 model: CCD-TRV3E/TRV13E/
TRV23E/TRV45E/TRV55E

Connection:

1) Remove C085 (0.01µF, Pin ⑯ of IC202).

**Note:** After completing "REC L Level Adjustment" and "REC C Current Adjustment", replace C085 with new parts (1-162-970-11 CERAMIC CHIP 0.01µF 10% 25V).

2) Connect Pin ① of IC001 and GND with a 0.01F capacitor.
0.01µF capacitor: 1-101-004-00

Preparations only for the model without REC switch:

1) Select page: 0, address: 01, and set data: 01.
2) Select page: D, address: 14, after memorizing the data, set the bit value of bit1 to "1". (Refer to "3. Bit value discrimination" of "3-1-8. Service mode").
3) Select page: D, address: 15, after memorizing the data , set the bit value of bit7 to "0".
4) Set to recording mode. (Use the wireless remote commander of 8mm VCR, or connect Pin ⑥ of CN935 of DD-95 board and GND with 4.7kΩ registor for a second.)
4.7kΩ registor : 1-249-425-11

Adjusting method:

1) Insert a tape, set to recording mode.
2) Select page: 0, address: 01, and set data: 01.
3) Select page: 3, address: 01, set data: 41, and press the PAUSE button of the adjusting remote commander.
4) Select page: 2, address: 61, and set data: 30.
5) Select page: F, address: 65, change the data and set the REC chroma signal level (A) to the specified value.
6) Press the PAUSE button of the adjusting remote commander.
7) Select page: 2, address: 61, and set data: 10.
8) Select page: 3, address: 01, set data: 00, and press the PAUSE button of the adjusting remote commander.
9) Select page: 0, address: 01, and set data: 00.

Processing after completed adjustment: only for the model without REC switch:

1) Select page: 0, address: 01, and set data: 01.
2) Select page: D, address: 14, and set the data memorized at step 2) of "Preparations only for the model without REC switch".
3) Press the PAUSE button of the adjusting remote commander.
4) Select page: D, address: 15, and set the data memorized at step 3) of "Preparations only for the model without REC switch".
5) Press the PAUSE button of the adjusting remote commander.
6) Select page: 0, address: 01, and set data: 00.

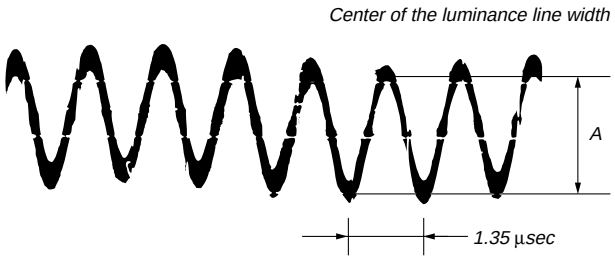


***Fig. 5-3-17.***

## 3-5. IR TRANSMITTER ADJUSTMENTS (CCD-TRV75/TRV75PK/TRV715)

Adjust using a IR receiver jig (J-6082-383-A).

Switch setting:
LASER LINK ..... (Red LED is lit)

### 1. IR Video Carrier Frequency Adjustment (VC-195 board)

| | |
|---|---|
| Mode | Camera standby |
| Subject | Arbitrary |
| Measurement Point | Pin ⑤ of CN003 of IR receiver jig (RF) ( Or Pin ⑯ of IC751 of VC-195 board) |
| Measuring Instrument | Frequency counter |
| Adjustment Page | F |
| Adjustment Address | 68 |
| Specified Value | f = 11.85±0.05MHz |

Connection of Equipment
Connect the measuring device as shown in the following figure, and adjust.

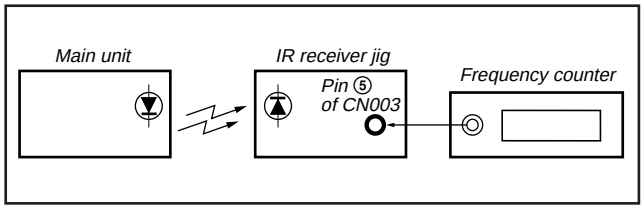


***Fig. 5-3-18.***

Adjusting method:
1) Select page: 0, address: 01, and set data: 01.
2) Select page: 3, address: 01, set data: 37, and press the PAUSE button of the adjusting remote commander.
3) Select page: F, address: 68, change the data, and set the video carrier frequency (f) to the specified value.
4) Press the PAUSE button of the adjusting remote commander.
5) Select page: 3, address: 01, set data: 00, and press the PAUSE button of the adjusting remote commander.
6) Select page: 0, address: 01, and set data: 00.

### 2. IR Video Deviation Adjustment (VC-195 board)

| | |
|---|---|
| Mode | Camera standby |
| Subject | Arbitrary |
| Measurement Point | VIDEO OUT terminal of IR receiver jig (Terminated at 75Ω) |
| Measuring Instrument | Oscilloscope |
| Adjustment Page | F |
| Adjustment Address | 66 |
| Specified Value | A = 0.87±0.04V |

Connection of Equipment
Connect the measuring device as shown in the following figure, and adjust.

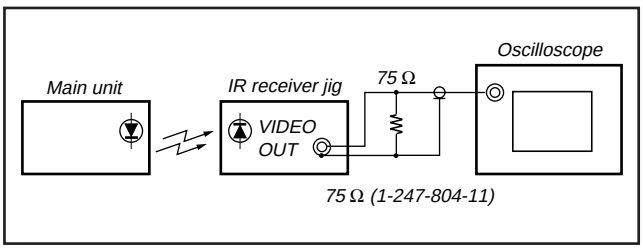


***Fig. 5-3-19.***

Adjusting method:
1) Select page: 0, address: 01, and set data: 01.
2) Select page: 3, address: 01, set data: 39, and press the PAUSE button of the adjusting remote commander.
3) Select page: F, address: 66, and change the data, set the video signal amplitude (A) to the specified value.
4) Press the PAUSE button of the adjusting remote commander.
5) Select page: 3, address: 01, set data: 00, and press the PAUSE button of the adjusting remote commander.
6) Select page: 0, address: 01, and set data: 00.

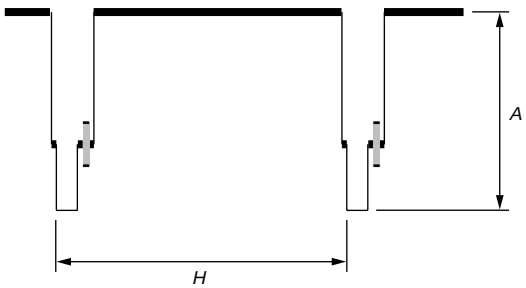


***Fig. 5-3-20.***

### 3. IR Audio Deviation Adjustment (VC-195 board)

| | |
|---|---|
| Mode | VTR recording |
| Signal | Audio signal :<br>400Hz, –7.5dBs : L or R of AUDIO terminal<br>Video signal :<br>Color bar signal : VIDEO terminal |
| Measurement Point | AUDIO L terminal and AUDIO R terminal of IR receiver jig<br>( Terminated at 47kΩ) |
| Measuring Instrument | Audio level meter |
| Adjustment Page | F |
| Adjustment Address | 67 |
| Specified Value | Signal level: –7.5±2.0dBs |

Connection of Equipment
Connect the measuring device as shown in the following figure, and adjust.

Adjusting method:
1) Select page: 0, address: 01, and set data: 01.
2) Connect the audio level meter to the AUDIO L terminal of the IR receiver jig.
3) Select page: F, address: 67, change the data and set the 400Hz audio signal level to the specified value.
4) Press the PAUSE button of the adjusting remote commander.
5) Connect the audio level meter to the AUDIO R terminal of the IR receiver jig.
6) Check that the 400Hz audio signal level is within the specified value. If outside, repeat from step 2).
7) Select page: 0, address: 01, and set data: 00.

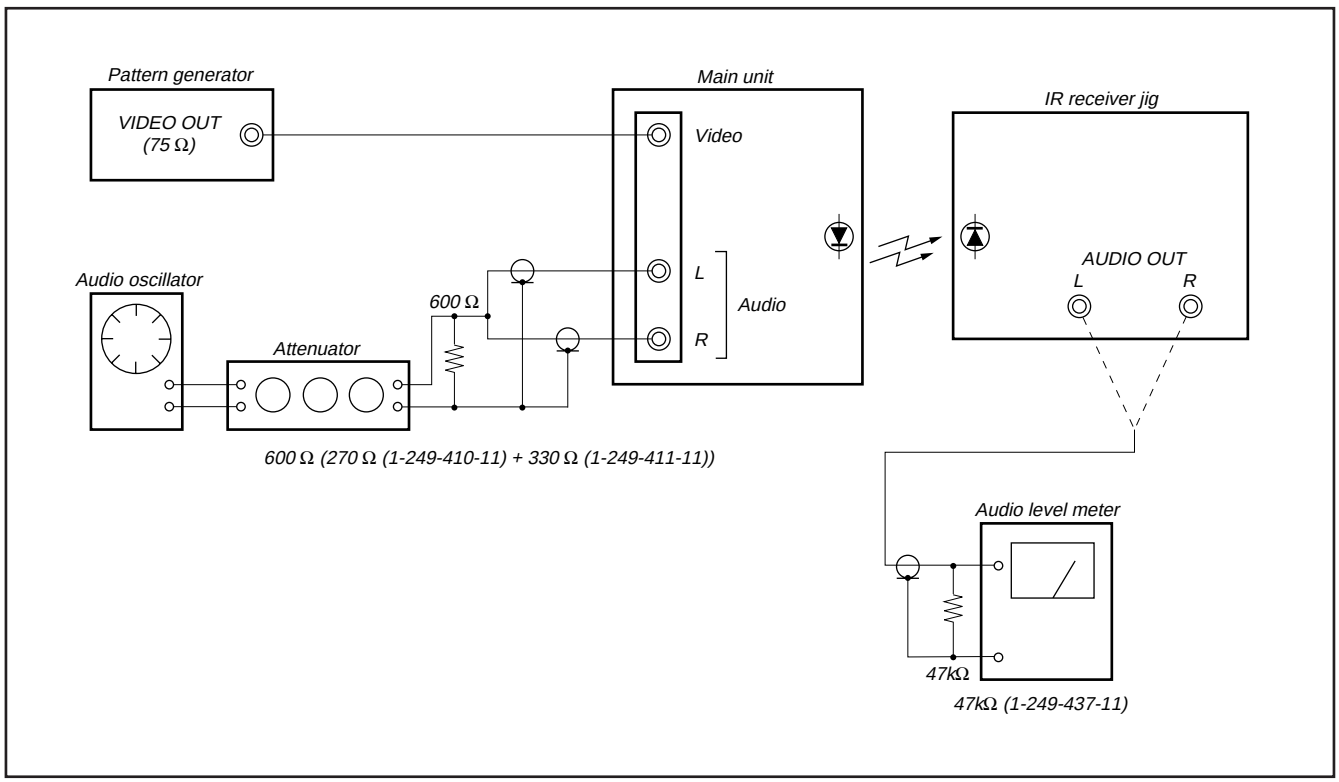


***Fig. 5-3-21.***

### 3-6. STEREO AUDIO SYSTEM ADJUSTMENT (CCD-TRV45E/TRV55E/TRV65E/TRV69E/TRV75/ TRV75PK/TRV715)

- Perform the adjustment using the color bar signal as a video signal input for VIDEO terminal.
- The items to be adjusted for the R channel will be indicated within the [ ], in regard to the adjusting items to be adjusted for both L and R channels.
- Set the Hi-Fi sound switch in the menu display to “STEREO” position unless specified otherwise.

**Note:**

1) When inputting the audio signal, input the same signal to both the L and R channels, unless specified otherwise.
2) Be sure to insert the plug (Shorting plug or dummy plug, etc) into the AUDIO terminal (Right). If the plug is not inserted, the monaural mode well be set, and correct adjustments can not be carried out.
   [Monaural mode]
   During recording ..... REC AFM RF 1.7MHz carriear will not be output.
   During playback ..... The L+R signal will be output from the AUDIO terminal (Left).

**[Connecting the measuring instruments for the audio]**

Connect the audio system measuring instruments in addition to the video system measuring instruments as shown in Fig. 5-3-22, and perform adjustments at the power switch [VTR] or [PLAYER] position.

**[Adjustment Procedure]**

1) 1.5 MHz deviation adjustment
2) 1.7 MHz deviation adjustment
3) BPF adjustment

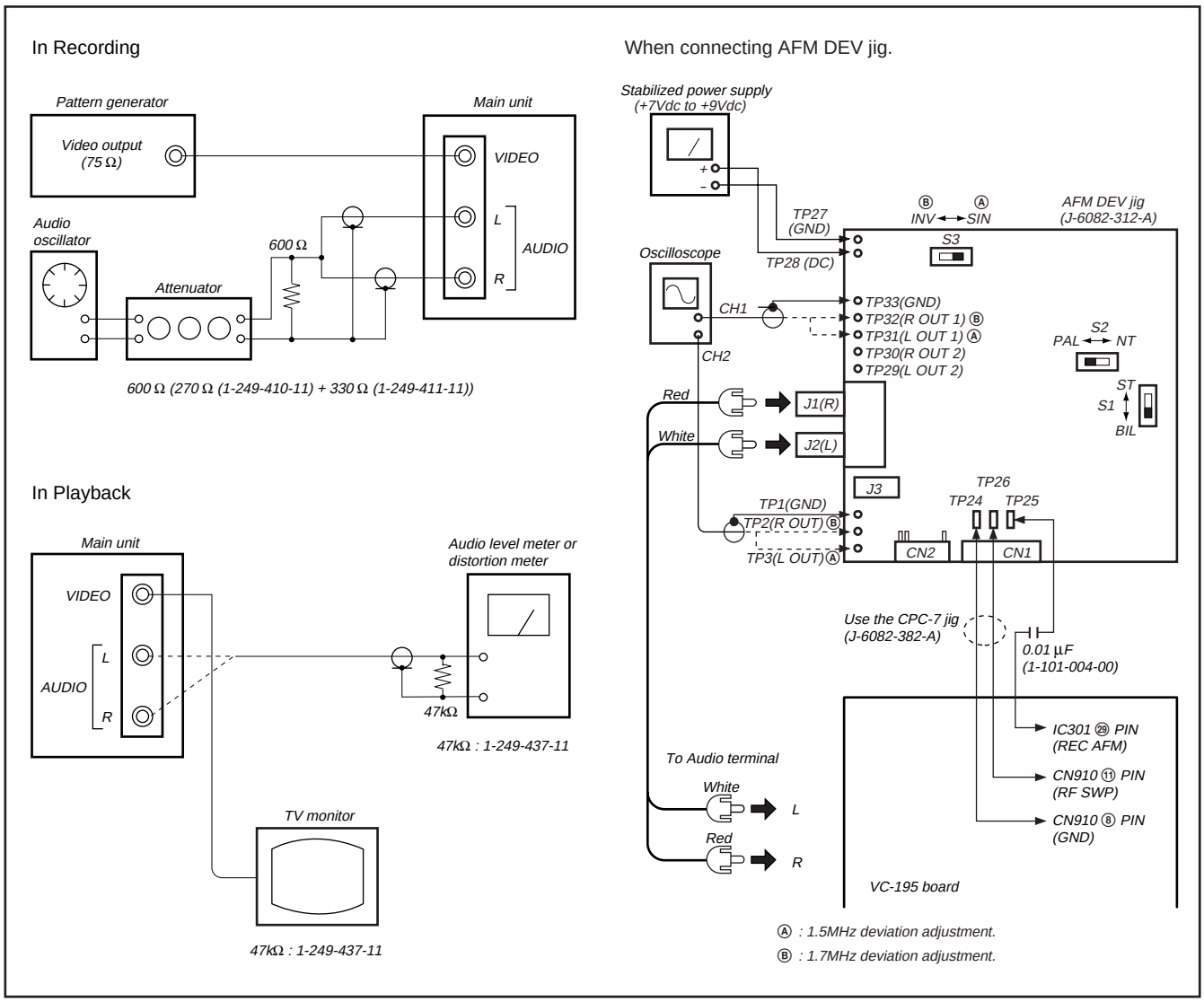


***Fig. 5-3-22.***

### 1. 1.5 MHz Deviation Adjustment (VC-195 board)

Sets the spectrum of the L-ch ((L+R)/2 signal) level modulated during recording. If deviated, the crosstalk signal of the audio signal will occur and the audio level will drop during both playback and recording.

| | |
|---|---|
| Mode | VTR recording |
| Signal | Input the AFM DEV jig output signal to the left and right audio input terminal |
| Measurement Point | CH1: AFM DEV jig TP31<br>CH2: AFM DEV jig TP3 |
| Measuring Instrument | Oscilloscope<br>ADD mode<br>CH2 INV mode |
| Adjustment Page | F |
| Adjustment Address | 45 |
| Specified Value | The level difference between CH1 signal and CH2 signal should be minimum. |

**Note 1:** NTSC model : CCD-TRV75/TRV75PK/TRV715
PAL model : CCD-TRV45E/TRV55E/TRV65E/TRV69E

Connection:

1) Connect TP24 and TP26 of the AFM DEV jig to CN910 of the VC-195 board.
   TP24(GND) ..... Pin ⑧ of CN910
   TP26(RF SWP) ..... Pin ⑪ of CN910
2) Connect TP25 (REC AFM) of the AFM DEV jig to Pin ㉙ of IC301 with a 0.01µF capacitor (1-101-004-00).
3) Connect the audio output terminal (J1 and J2) of the AFM DEV jig to AUDIO terminal of the unit.
4) Connect TP28 (DC), TP27 (GND) of the AFM DEV jig to the DC power supply (+7Vdc to +9Vdc).
5) Set the AFM DEV jig switches to the following positions.
   S1 ..... BIL Position
   S2 ..... NT Position (NTSC)
   PAL Position (PAL)
   S3 ..... SIN Position

Preparations only for the model without REC switch:

1) Select page: 0, address: 01, and set data: 01.
2) Select page: D, address: 14, after memorizing the data, set the bit value of bit1 to "1". (Refer to "3. Bit value discrimination" of "3-1-8. Service mode").
3) Select page: D, address: 15, after memorizing the data , set the bit value of bit7 to "0".
4) Set to recording mode. (Use the wireless remote commander of 8mm VCR, or connect Pin ⑥ of CN935 of DD-95 board and GND with 4.7kΩ registor for a second.)
   4.7kΩ registor : 1-249-425-11

Adjusting method :

1) Match the vertical ranges of CH1 and CH2 of the oscilloscope to each other.
2) Set the oscilloscope to the ADD mode and CH2 to the INV (invert) mode.
3) Select page: 0, address: 01, and set data: 01.
4) Select page: F, address: 45, change the data and minimize the audio signal level difference (A).
5) Press the PAUSE button of the adjusting remote commander.
6) Select page: 0, address: 01, and set data: 00.

Processing after completed adjustment: only for the model without REC switch:

1) Select page: 0, address: 01, and set data: 01.
2) Select page: D, address: 14, and set the data memorized at step 2) of "Preparations only for the model without REC switch".
3) Press the PAUSE button of the adjusting remote commander.
4) Select page: D, address: 15, and set the data memorized at step 3) of "Preparations only for the model without REC switch".
5) Press the PAUSE button of the adjusting remote commander.
6) Select page: 0, address: 01, and set data: 00.

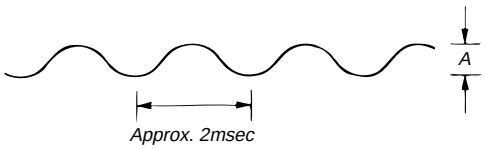


***Fig. 5-3-23.***

### 2. 1.7 MHz Deviation Adjustment (VC-195 board)

Sets the spectrum of the R-ch ((L-R)/2 signal) level modulated during recording. If deviated, the crosstalk signal of the audio signal will occur and the audio level will drop during both playback and recording.

| | |
|---|---|
| Mode | VTR recording |
| Signal | Input the AFM DEV jig output signal to the left and right audio input terminal |
| Measurement Point | CH1: AFM DEV jig TP32<br>CH2: AFM DEV jig TP2 |
| Measuring Instrument | Oscilloscope<br>ADD mode<br>CH2 normal mode |
| Adjustment Page | F |
| Adjustment Address | 46 |
| Specified Value | The level difference between CH1 signal and CH2 signal should be minimum. |

Connection:

1) Connect TP24 and TP26 of the AFM DEV jig to CN910 of the VC-195 board.
   TP24 (GND) ..... Pin ⑧ of CN910
   TP26 (RF SWP) ..... Pin ⑪ of CN910
2) Connect TP25 (REC AFM) of the AFM DEV jig to Pin ㉙ of IC301 with a 0.01μF capacitor (1-101-004-00).
3) Connect the audio output terminal (J1 and J2) of the AFM DEV jig to AUDIO terminal of the unit.
4) Connect TP28 (DC), TP27 (GND) of the AFM DEV jig to the DC power supply (+7Vdc to +9Vdc).
5) Set the AFM DEV jig switches to the following positions.
   S1 ..... BIL Position
   S2 ..... NT Position (NTSC)
   PAL Position (PAL)
   S3 ..... INV Position

Preparations only for the model without REC switch:

1) Select page: 0, address: 01, and set data: 01.
2) Select page: D, address: 14, after memorizing the data, set the bit value of bit1 to “1”. (Refer to “3. Bit value discrimination” of “3-1-8. Service mode”).
3) Select page: D, address: 15, after memorizing the data , set the bit value of bit7 to “0”.
4) Set to recording mode. (Use the wireless remote commander of 8mm VCR, or connect Pin ⑥ of CN935 of DD-95 board and GND with 4.7kΩ registor for a second.)
   4.7kΩ registor : 1-249-425-11

Adjusting method :

1) Match the vertical ranges of CH1 and CH2 of the oscilloscope to each other.
2) Set the oscilloscope to the ADD mode and CH2 to the normal mode.
3) Select page: 0, address: 01, and set data: 01.
4) Select page: F, address: 46, change the data and minimize the audio signal level difference (A).
5) Press the PAUSE button of the adjusting remote commander.
6) Select page: 0, address: 01, and set data: 00.

Processing after completed adjustment: only for the model without REC switch:

1) Select page: 0, address: 01, and set data: 01.
2) Select page: D, address: 14, and set the data memorized at step 2) of “Preparations only for the model without REC switch”.
3) Press the PAUSE button of the adjusting remote commander.
4) Select page: D, address: 15, and set the data memorized at step 3) of “Preparations only for the model without REC switch”.
5) Press the PAUSE button of the adjusting remote commander.
6) Select page: 0, address: 01, and set data: 00.

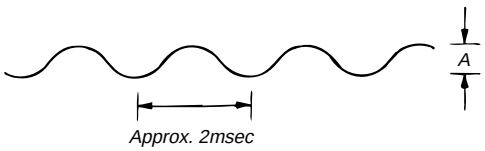


***Fig. 5-3-24.***

### 3. BPF f0 Adjustment (VC-195 board)

Sets the BPF passing frequency so that the AFM signal can separate from the playback RF signal properly. If deviated. the mono/stereo mode will be differentiated incorrectly, and noises and distortions will increase during high volume playback.

| | |
|---|---|
| Mode | Playback |
| Signal | Alignment tape:<br>For BPF adjustment<br>(WR5-11NS (NTSC))<br>(WR5-11CS (PAL)) |
| Measurement Point | Audio output terminal left or right |
| Measuring Instrument | Distortion meter |
| Adjustment Page | F |
| Adjustment Address | 47 |
| Specified Value | The Main and Sub channel distortion rate should be almost the same (within±1%) and minimum. |

**Note 1:** NTSC model : CCD-TRV75/TRV75PK/TRV715
PAL model : CCD-TRV45E/TRV55E/TRV65E/TRV69E

Adjusting method :

1) Select page: 0, address: 01, and set data: 01.
2) Set the Hi-Fi sound switch (menu display) to “2”.
3) Select page: F, address: 47, change the data and minimize the distortion rate.
4) Press the PAUSE button of the adjusting remote commander.
5) Set the Hi-Fi sound switch (menu display) to “1”.
6) Select page: F, address: 47, change the data and minimize the distortion rate.
7) Press the PAUSE button of the adjusting remote commander.
8) Repeat steps 2) to 7) and set the data of address: 47 so that the distortions rates when the Hi-Fi sound switch is set to “2” and set to “1” respectively are almost the same and minimum.
9) Press the PAUSE button of the adjusting remote commander.
10) Select page: 0, address: 01, and set data: 00.
11) Set the Hi-Fi sound switch to “STEREO”.

### 3-7. MONAURAL AUDIO SYSTEM ADJUSTMENT (CCD-TRV3E/TRV13E/TRV23E)

[Connecting the measuring instruments for the audio]
Connect the audio system measuring instruments besides the video system measuring instruments as shown Fig. 5-3-25.

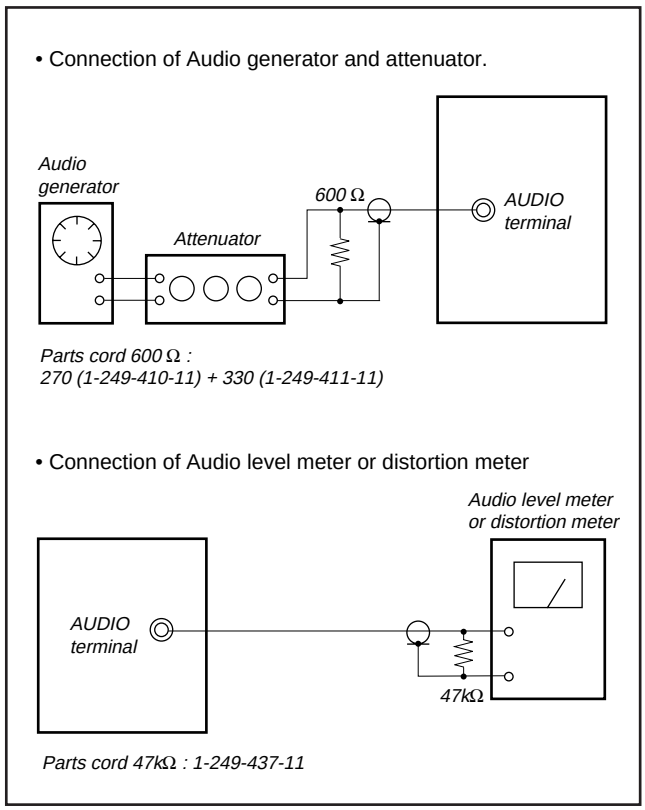


***Fig. 5-3-25.***

### 1. 1.5 MHz Deviation Adjustment (VC-195 board)

Adjust to the optimum audio FM signal distortion.
If the adjustment is not correct, its playback level will differ from that of other units.

| Mode | Playback |
|---|---|
| Signal | Alignment tape:<br>For checking the operation (WR5-5CSP) |
| Measurement Point | Audio output terminal |
| Measuring Instrument | Audio level meter |
| Adjustment Page | F |
| Adjustment Address | 45 |
| Specified Value | –7.5±0.5dBs |

Adjusting method :

1) Select page: 0, address: 01, and set data: 01.
2) Select page: F, address: 45, change the data and set the 400Hz signal level to the specified value.
3) Press the PAUSE button of the adjusting remote commander.
4) Select page: 0, address: 01, and set data: 00.

### 2. BPF Adjustment (VC-195 board)

Adjust to the optimum audio BPF characteristics of the IC.
If the adjustment is not correct, the distortion rate and S/N ratio will worsen.

| Mode | Playback |
|---|---|
| Signal | Alignment tape:<br>For BPF adjustment (WR5-11CS) |
| Measurement Point | Audio output terminal |
| Measuring Instrument | distortion meter |
| Adjustment Page | F |
| Adjustment Address | 47 |
| Specified Value | The distortion rate should be and minimum. |

Adjusting method :

1) Select page: 0, address: 01, and set data: 01.
2) Select page: F, address: 47, change the data and minimize the distortion rate.
3) Press the PAUSE button of the adjusting remote commander.
4) Select page: 0, address: 01, and set data: 00.



## 3-8. ARRANGEMENT DIAGRAM FOR ADJUSTMENT PARTS

### VC-195 BOARD (SIDE A)

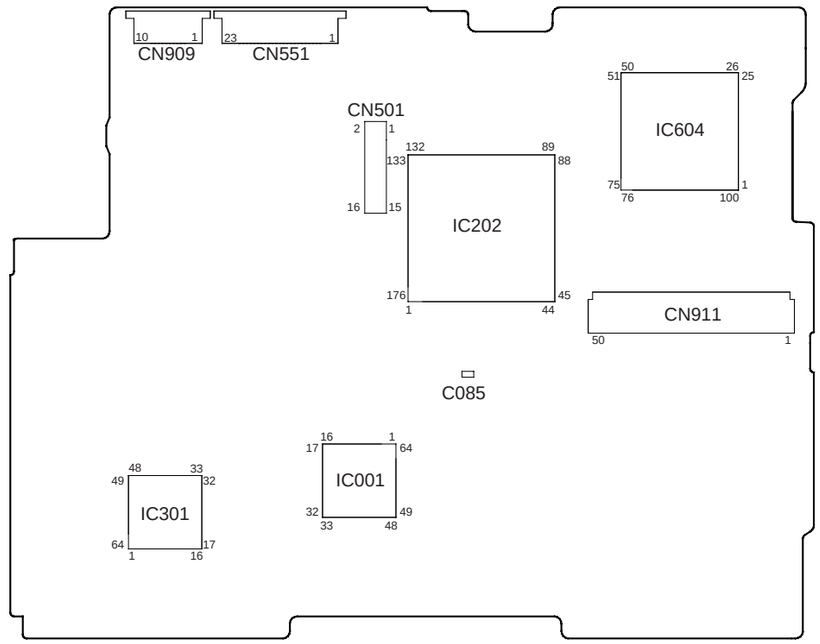


### VC-195 BOARD (SIDE B)

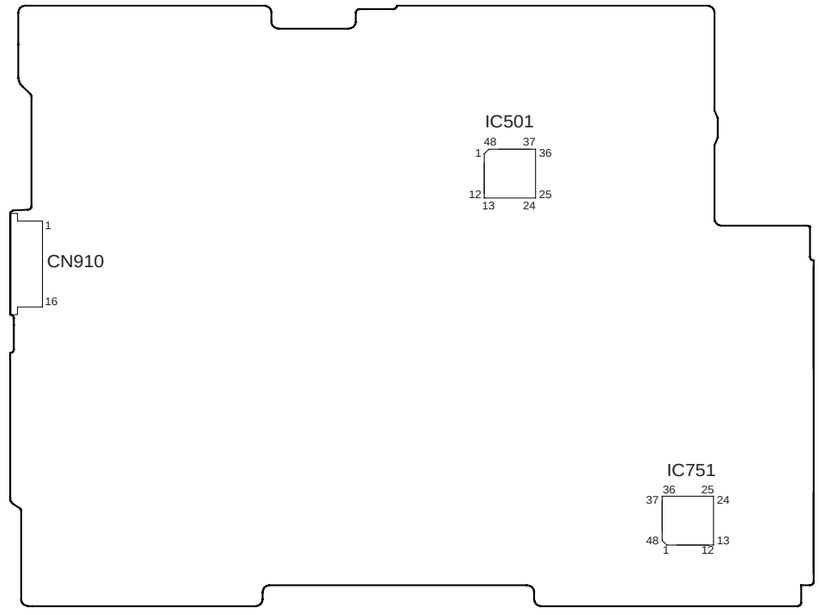

# SECTION 6
# REPAIR PARTS LIST

## 6-1. EXPLODED VIEWS

NOTE:

- Items marked "*" are not stocked since they are seldom required for routine service. Some delay should be anticipated when ordering these items.
- The mechanical parts with no reference number in the exploded views are not supplied.
- Abbreviation
  CND : Canadian Model
  EE : East European Model
  NE : North European Model
  RU : Russian Model
  HK : Hong Kong Model
  AUS : Australian Model
  JE : Tourist Model
  CN : Chinese Model

The components identified by mark ⚠ or dotted line with mark ⚠ are critical for safety.
Replace only with part number specified.

Les composants identifiés par une marque ⚠ sont critiques pour la sécurité.
Ne les remplacer que par une piéce portant le numéro spécifié.

### 6-1-1. CABINET (L) BLOCK ASSEMBLY

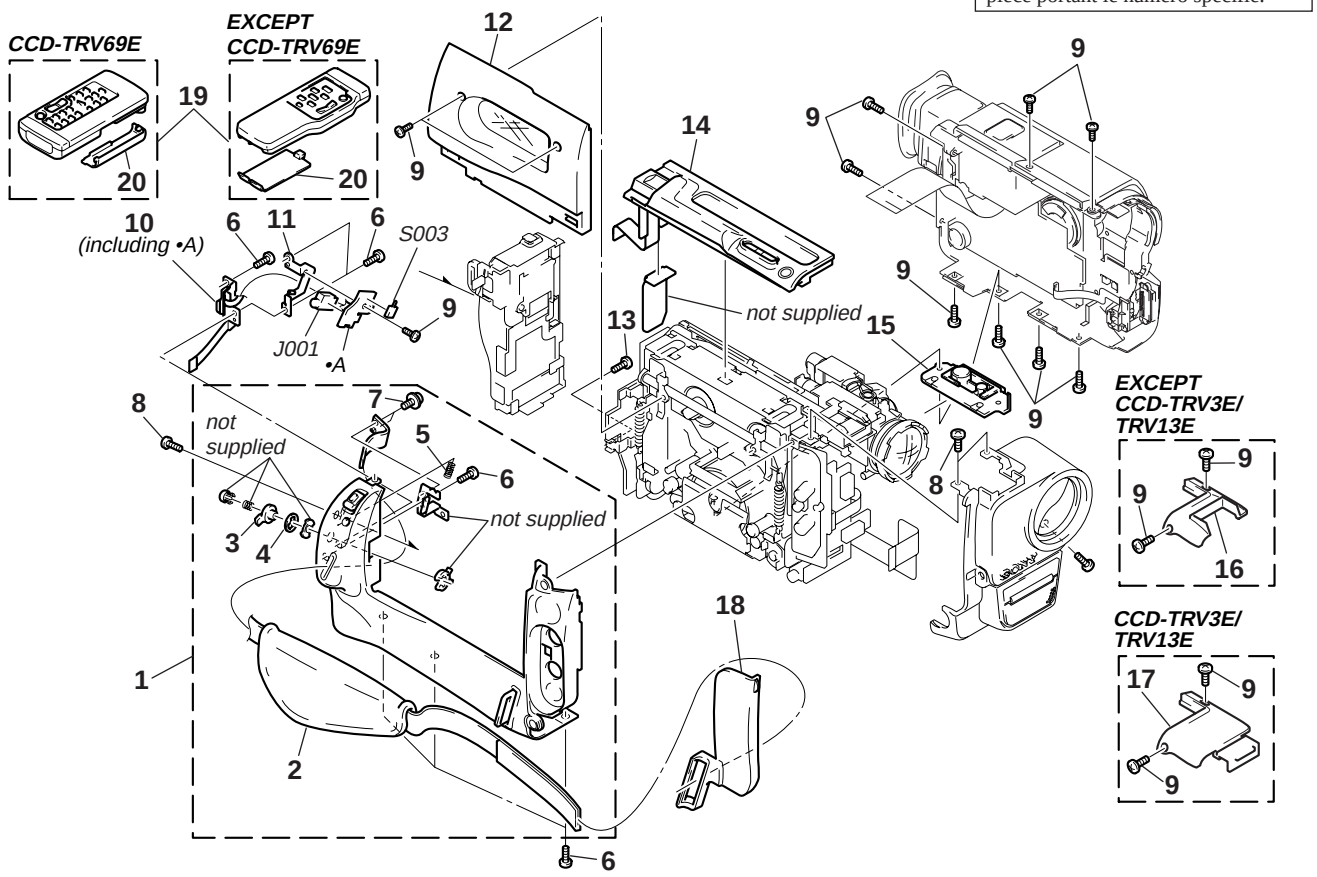


| Ref. No. | Part No. | Description | Remark |
|---|---|---|---|
| 1 | X-3948-205-1 | CABINET (L) ASSY (TRV65E) | |
| 1 | X-3948-315-1 | CABINET (L) ASSY (TRV75/TRV75PK/TRV715) | |
| 1 | X-3948-207-1 | CABINET (L) ASSY (TRV3E/TRV13E/TRV23E/TRV69E) | |
| 1 | X-3948-316-1 | CABINET (L) ASSY (TRV45E/TRV55E) | |
| 2 | 3-969-339-31 | BELT, GRIP | |
| 3 | 3-969-081-01 | KNOB, STAND-BY | |
| 4 | 3-970-854-01 | SPRING, STAND-BY | |
| 5 | 3-302-492-00 | SPRING, COMPRESSION | |
| 6 | 3-948-339-61 | TAPPING | |
| 7 | 3-679-362-11 | SCREW | |
| 8 | 3-962-826-01 | SCREW (2X4) | |
| 9 | 3-968-729-01 | SCREW (M2), LOCK ACE, P2 | |
| 10 | 1-475-619-21 | SWITCH BLOCK, CONTROL(SS-8500)(TRV55E) | |
| 10 | 1-475-619-11 | SWITCH BLOCK, CONTROL(SS-8500) (EXCEPT TRV55E) | |
| * 11 | 3-975-532-01 | HOLDER, EL | |
| 12 | X-3947-199-1 | LID ASSY, CASSETTE (TRV75:US,CND/TRV715) | |
| 12 | X-3948-222-1 | LID ASSY, CASSETTE (TRV65E/69E) | |
| 12 | X-3948-223-1 | LID ASSY, CASSETTE (TRV3E/TRV13E/TRV23E) | |
| 12 | X-3948-329-1 | LID ASSY, CASSETTE (TRV45E/TRV55E) | |
| 12 | X-3948-331-1 | LID ASSY, CASSETTE (TRV75:E,JE/TRV75PK) | |
| 13 | 3-713-786-21 | SCREW (M2X3) | |
| 14 | 1-475-617-11 | SWITCH BLOCK, CONTROL(FK-8500) (TRV3E/TRV13E) | |
| 14 | 1-475-617-31 | SWITCH BLOCK, CONTROL (FK-8500) (TRV23E/TRV65E/TRV69E) | |
| 14 | 1-475-618-21 | SWITCH BLOCK, CONTROL(FK-8500) (TRV45E/TRV55E) | |
| 14 | 1-475-618-41 | SWITCH BLOCK, CONTROL(FK-8500) (TRV75/TRV75PK/TRV715) | |
| 15 | 3-987-717-01 | SCREW, TRIPOD | |
| 16 | 3-987-639-11 | CABINET (S) (878) (TRV45E/TRV55E/TRV75/TRV75PK/TRV715) | |
| 16 | 3-987-639-01 | CABINET (S (870)) (TRV23E/TRV65E/TRV69E) | |
| 17 | 3-987-645-01 | CABINET (N)(TRV3E/TRV13E) | |
| 18 | 3-975-522-01 | COVER, JACK | |
| 19 | 1-467-574-21 | REMOTE COMMANDER (RMT-708) (EXCEPT TRV69E) | |
| 19 | 8-917-593-90 | REMOTE COMMANDER (RMT-717)(TRV69E) | |
| 20 | 3-958-131-01 | LID, BATTERY CASE (for RMT-708) | |
| 20 | 3-742-854-01 | LID, BATTERY CASE (for RMT-717) | |
| J001 | 1-565-276-31 | JACK, ULTRA SMALL 1P (LANC) | |
| S003 | 1-572-688-11 | SWITCH, PUSH (1 KEY) (EJECT) | |

### 6-1-2. FRONT PANEL BLOCK ASSEMBLY

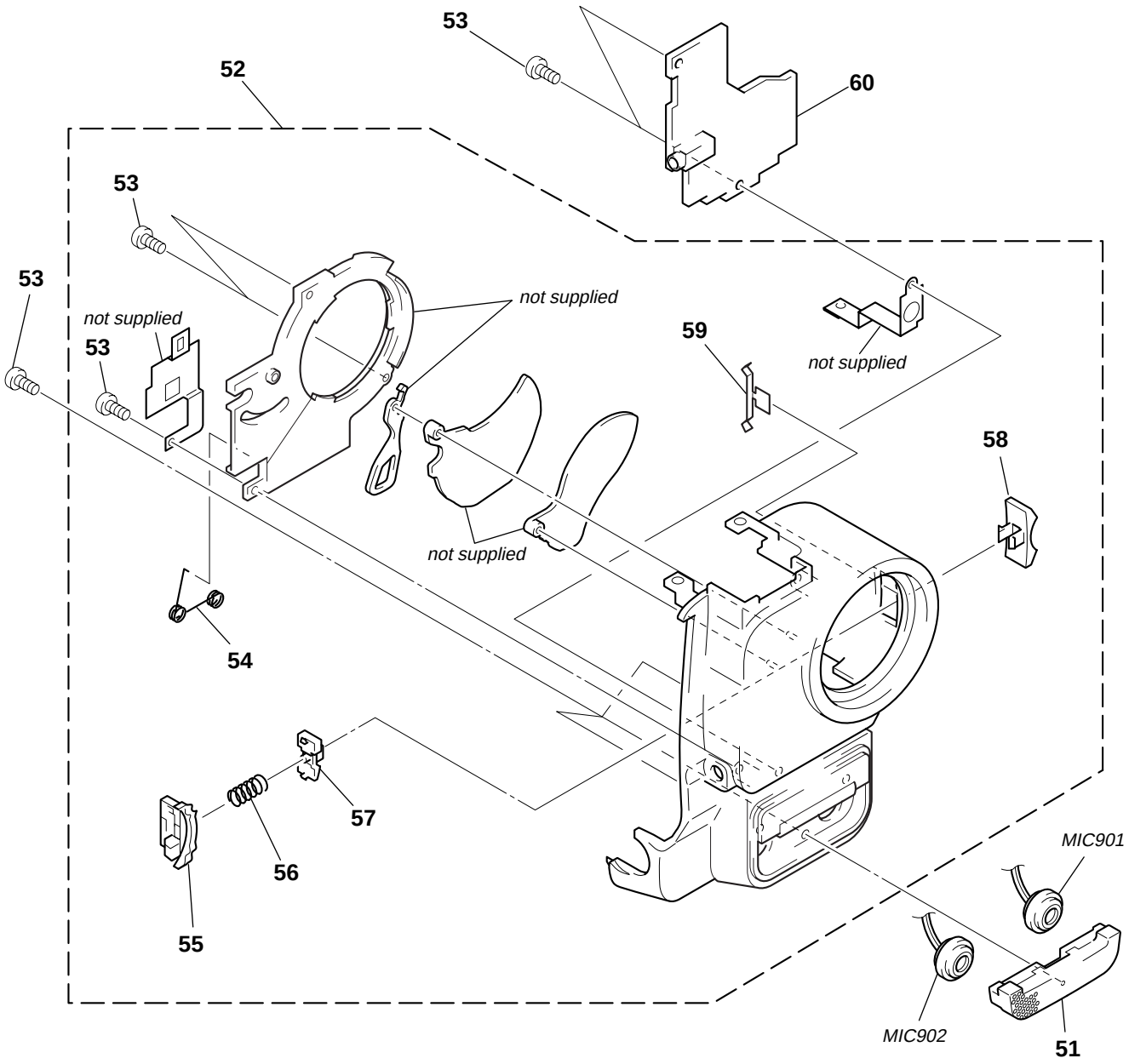


| Ref. No. | Part No. | Description | Remark |
|---|---|---|---|
| 51 | X-3948-170-1 | GRILLE (870) ASSY, MICROPHONE | |
| 52 | X-3948-189-1 | PANEL (870) ASSY, FRONT (TRV3E/TRV13E) | |
| 52 | X-3948-198-1 | PANEL (870) ASSY, FRONT (TRV23E) | |
| 52 | X-3948-197-1 | PANEL (870) ASSY, FRONT (TRV69E) | |
| 52 | X-3948-200-1 | PANEL (870) ASSY, FRONT (TRV65E) | |
| 52 | X-3948-203-1 | PANEL (887) ASSY, FRONT (TRV45E/TRV55E) | |
| 52 | X-3948-275-1 | PANEL (887) ASSY, FRONT (TRV75/TRV75PK/TRV715) | |
| 53 | 3-948-339-61 | TAPPING | |
| 54 | 3-987-882-01 | SPRING, TORSION | |
| 55 | 3-987-632-01 | HOLDER, P KNOB | |
| 56 | 3-973-619-01 | SPRING, COMPRESSION | |
| 57 | 3-987-633-01 | BUTTON, LOCK | |
| 58 | 3-987-631-01 | KNOB, P(TRV23E:E1,HK,AUS/TRV45E:AUS,E2/ TRV55E/TRV65E:AEP,EE,NE,RU/TRV75:HK,US,CND/TRV75PK) | |

| Ref. No. | Part No. | Description | Remark |
|---|---|---|---|
| 58 | 3-987-631-02 | KNOB, P (TRV3E/TRV13E/TRV23E:E2/ TRV45E:E1,HK/TRV65E:AEP,UK/TRV69E/TRV75:E/TRV715) | |
| 59 | 3-987-642-01 | SPRING, CLICK | |
| 60 | A-7073-476-A | MA-331(VZL) BOARD, COMPLETE (TRV3E/TRV13E) | |
| 60 | A-7073-478-A | MA-331(VHO) BOARD, COMPLETE (TRV45E/TRV55E) | |
| 60 | A-7073-430-A | MA-312(VHI) BOARD, COMPLETE (TRV75/TRV75PK/TRV715) | |
| 60 | A-7073-501-A | MA-331(VHO) BOARD, COMPLETE (TRV65E) | |
| 60 | A-7073-451-A | MA-331(VMM0) BOARD, COMPLETE (TRV23E/TRV69E) | |
| MIC901 | 1-542-312-11 | MICROPHONE (L-CH) | |
| MIC902 | 1-542-312-11 | MICROPHONE (R-CH) (EXCEPT TRV3E/TRV13E/TRV23E) | |

### 6-1-3. CABINET (R) BLOCK ASSEMBLY (TRV45E/TRV55E/TRV75/TRV75PK/TRV715)

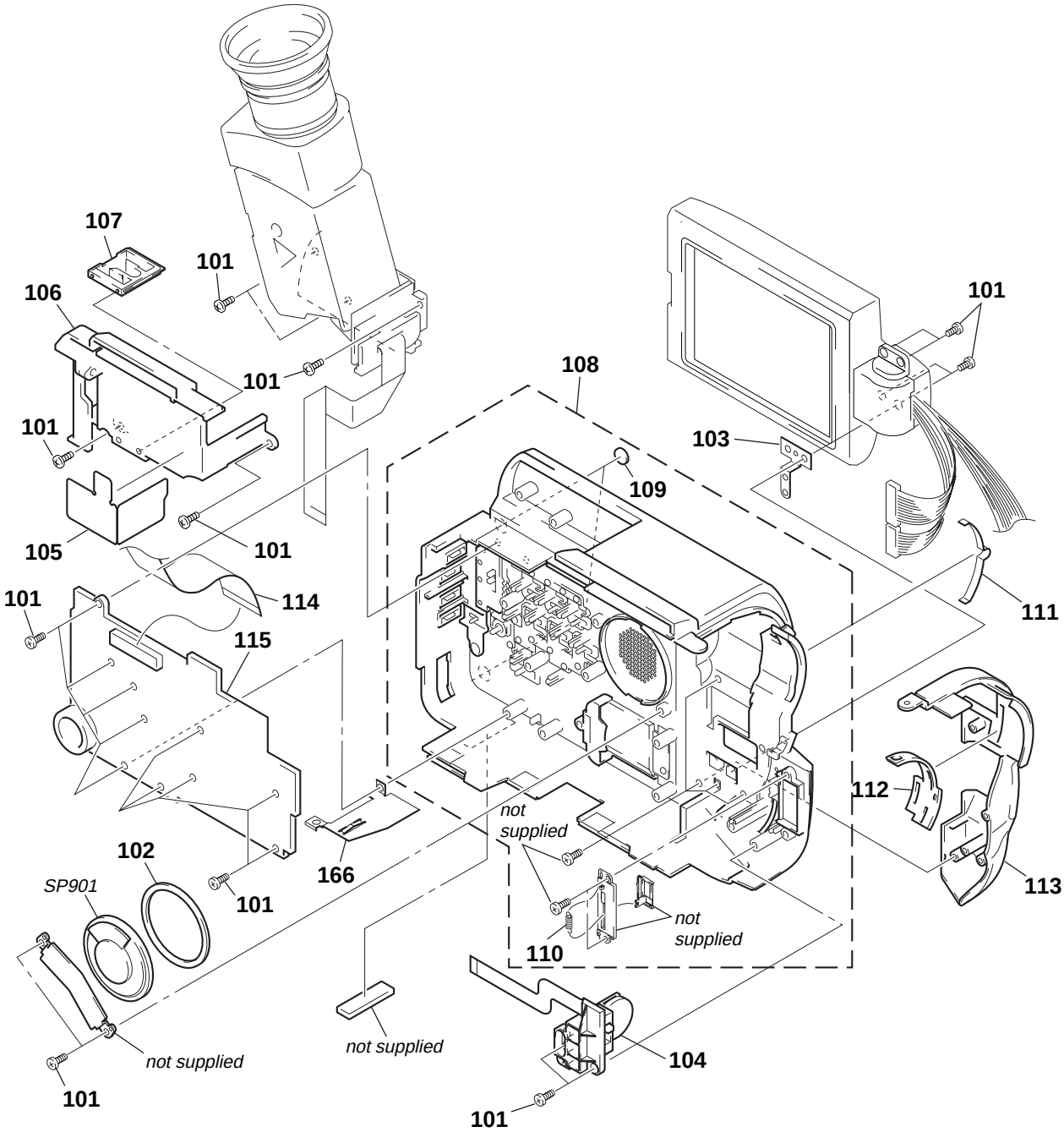


| Ref. No. | Part No. | Description | Remark |
|---|---|---|---|
| 101 | 3-948-339-61 | TAPPING | |
| 102 | 3-965-367-01 | SPACER, SP | |
| 103 | 3-987-769-01 | PLATE, HINGE GROUND | |
| 104 | 1-475-621-11 | SWITCH BLOCK, CONTROL(MR-8500) | |
| * 105 | 3-987-842-01 | SHEET, VF FLEXIBLE RETAINE | |
| 106 | 3-987-792-01 | BASE (887), VF | |
| 107 | 3-987-783-01 | LOCK, TILT | |
| 108 | X-3948-267-1 | CABINET (R) (887) ASSY (TRV75:US,CND/TRV715) | |
| 108 | X-3948-268-1 | CABINET (R) (883) ASSY (TRV45E/TRV75:E/TRV75PK) | |
| 108 | X-3948-269-1 | CABINET (R) (886) ASSY (TRV55E) | |

| Ref. No. | Part No. | Description | Remark |
|---|---|---|---|
| 109 | 3-959-978-02 | CUSHION, PANEL | |
| 110 | 3-989-121-01 | SPRING, TENSION | |
| 111 | 3-987-739-01 | SPRING, LINK PLATE | |
| 112 | 3-987-744-01 | KNOB, IR | |
| 113 | 3-987-764-01 | COVER, IR | |
| 114 | 1-783-240-11 | CABLE, FLEXIBLE FLAT (FFC-236) | |
| 115 | A-7073-431-A | CF-51(VH) BOARD, COMPLETE (TRV45E/TRV75/TRV75PK/TRV715) | |
| 115 | A-7073-479-A | CF-51(VMR) BOARD, COMPLETE (TRV55E) | |
| 116 | 3-987-770-01 | PLATE (887), GROUND | |
| SP901 | 1-504-753-21 | SPEAKER (2.8CM) | |

### 6-1-4. CABINET (R) BLOCK ASSEMBLY (TRV3E/TRV13E/TRV23E/TRV65E/TRV69E)

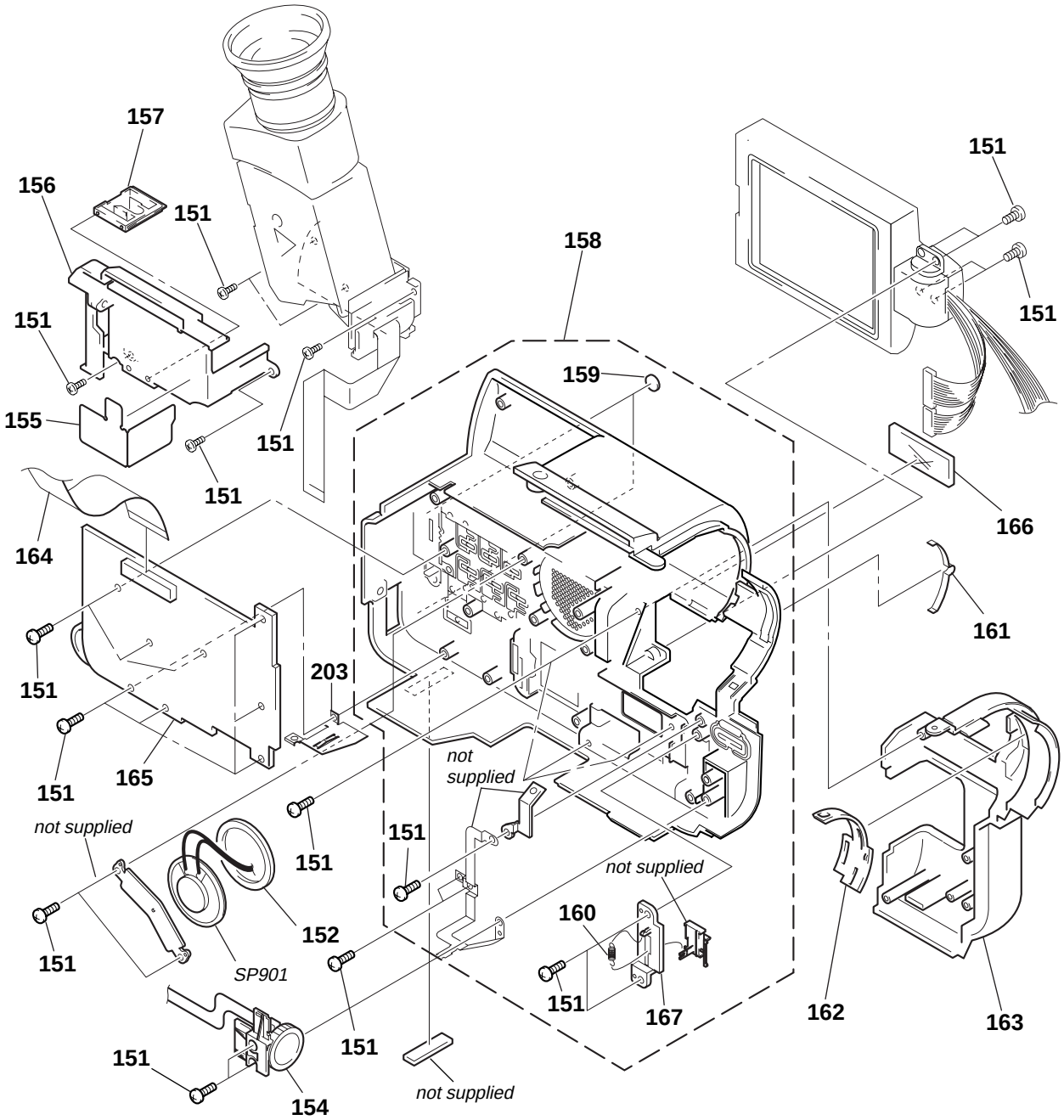


| Ref. No. | Part No. | Description | Remark |
|---|---|---|---|
| 151 | 3-948-339-61 | TAPPING | |
| 152 | 3-965-367-01 | SPACER, SP | |
| 153 | 3-987-742-01 | PLATE(878), GROUND | |
| 154 | 1-475-620-11 | SWITCH BLOCK, CONTROL(MF-8500) | |
| * 155 | 3-987-842-01 | SHEET, VF FLEXIBLE RETAINER | |
| 156 | 3-987-786-01 | BASE (878),VF (TRV13E/TRV23E) | |
| 156 | X-3948-603-1 | BASE, VF ASSY (TRV3E/TRV65E/TRV69E) | |
| 157 | 3-987-783-01 | LOCK, TILT | |
| 158 | X-3948-239-1 | CABINET (R) (878) ASSY (TRV65E:AEP,UK,CN) | |
| 158 | X-3948-243-1 | CABINET (R) (8451) ASSY (TRV13E:AEP,UK) | |
| 158 | X-3948-241-1 | CABINET (R) (872) ASSY (TRV69E) | |
| 158 | X-3948-242-1 | CABINET (R) (871) ASSY (TRV23E) | |
| 158 | X-3948-244-1 | CABINET (R) (877) ASSY (TRV65E:EE,NE,RU) | |
| 158 | X-3948-245-1 | CABINET (R) (877) ASSY (TRV13E:EE,NE,RU) | |
| 158 | X-3948-484-1 | CABINET (R) (8451E) ASSY (TRV3E) | |
| 159 | 3-959-978-02 | CUSHION,PANEL (EXCEPT TRV65E:EE,NE,RU,CN) | |

| Ref. No. | Part No. | Description | Remark |
|---|---|---|---|
| 160 | 3-987-742-01 | SPRING, TENSION | |
| 161 | 3-987-739-01 | SPRING, LINK PLATE (TRV23E/TRV65E/TRV69E) | |
| 162 | 3-987-744-01 | KNOB, IR (TRV23E/TRV65E/TRV69E) | |
| 163 | 3-987-730-01 | COVER, IR (TRV65E) | |
| 163 | 3-987-730-41 | COVER, IR (TRV3E/TRV13E) | |
| 163 | 3-987-730-21 | COVER, IR (TRV23E) | |
| 163 | 3-987-730-31 | COVER, IR (TRV69E) | |
| 164 | 1-783-240-11 | CABLE, FLEXIBLE FLAT (FFC-236) | |
| 165 | A-7073-403-A | CF-50(E7V) BOARD, COMPLETE (TRV3E/TRV13E) | |
| 165 | A-7073-412-A | CF-50(ESV) BOARD, COMPLETE (TRV23E/TRV65E/TRV69E) | |
| 166 | 3-987-729-01 | PLATE, ORNAMENTAL (TRV65E) | |
| 166 | 3-987-729-11 | PLATE, ORNAMENTAL (TRV3E/TRV13E/TRV23E) | |
| 166 | 3-987-729-41 | PLATE, ORNAMENTAL (TRV69E) | |
| 167 | 3-987-736-01 | LID,MK | |
| SP901 | 1-505-291-11 | SPEAKER (DIA 2.8CM) | |

### 6-1-5. LCD BLOCK ASSEMBLY(3/3.5INCH) (TRV45E/TRV55E/TRV75/TRV75PK/TRV715)

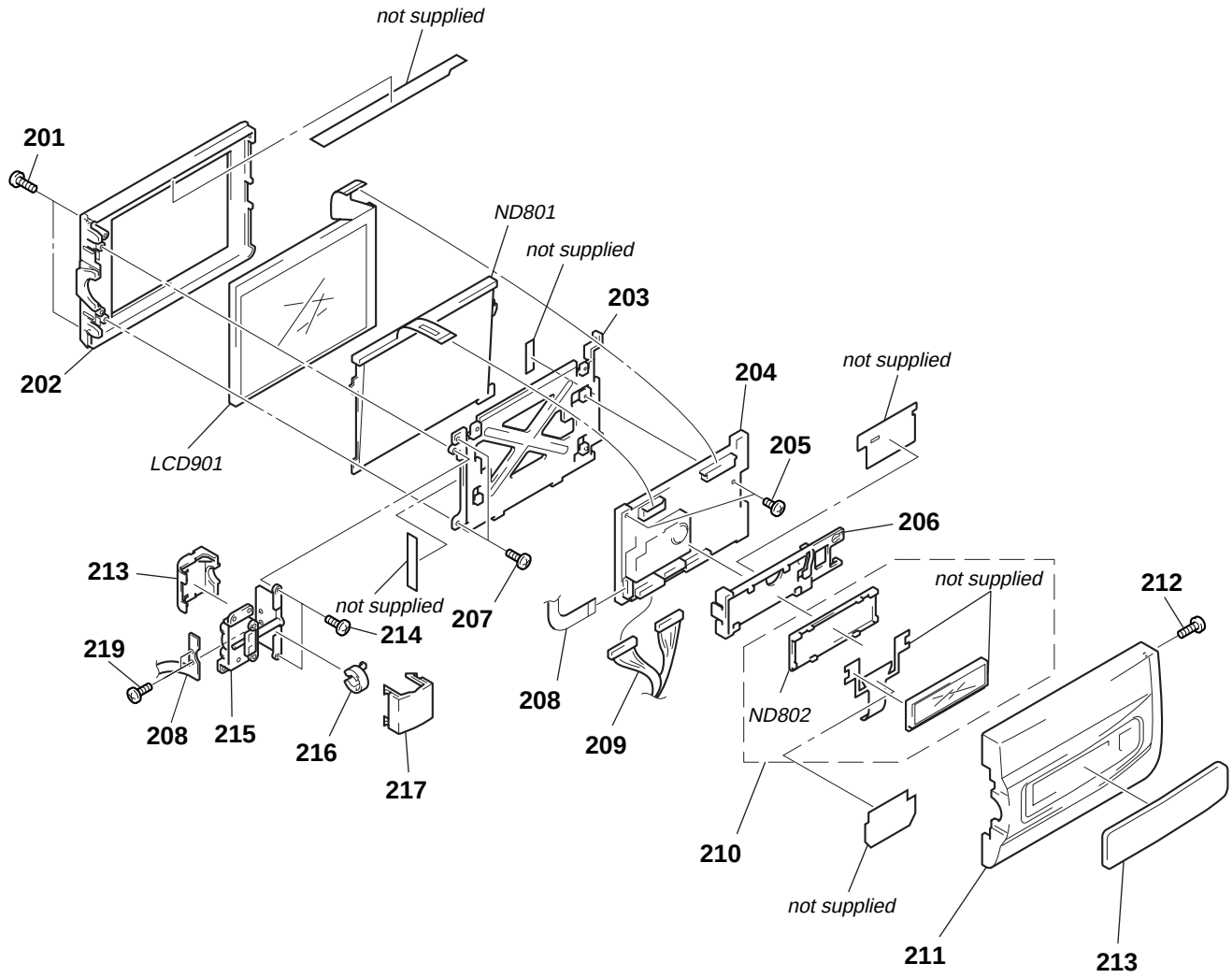


| | |
|---|---|
| The components identified by mark ⚠ or dotted line with mark ⚠ are critical for safety.<br>Replace only with part number specified. | Les composants identifiés par une marque ⚠ sont critiques pour la sécurité.<br>Ne les remplacer que par une piéce portant le numéro spécifié. |

| Ref. No. | Part No. | Description | Remark |
|---|---|---|---|
| 201 | 3-948-339-11 | SCREW, TAPPING | |
| 202 | 3-987-593-01 | CABINET (M) (885), P (TRV45E/TRV55E) | |
| 202 | 3-987-593-11 | CABINET (M) (885), P (TRV75/TRV75PK/TRV715) | |
| 203 | 3-987-594-01 | FRAME (885), PANEL | |
| 204 | A-7073-480-A | PD-93(SP3.5) BOARD, COMPLETE (TRV45E/TRV55E) | |
| 204 | A-7073-457-A | PD-93(SN3) BOARD, COMPLETE (TRV75/TRV75PK/TRV715) | |
| 205 | 3-713-786-21 | SCREW (M2X3) | |
| 206 | 3-987-597-01 | HOLDER (885), LCD | |
| 207 | 3-948-339-61 | TAPPING | |
| 208 | 1-668-963-41 | FP-642 FLEXIBLE BOARD | |
| 209 | 1-958-332-11 | HARNESS (DP-71) | |
| 210 | A-7093-486-A | INDICATION LCD BLOCK ASSY | |
| 211 | X-3948-165-1 | CABINET (C) (885) H ASSY, P | |
| 212 | 3-962-826-01 | SCREW (2X4) | |
| 213 | 3-987-601-21 | WINDOW (885), LCD (TRV75/TRV75PK/TRV715) | |

| Ref. No. | Part No. | Description | Remark |
|---|---|---|---|
| 213 | 3-987-601-31 | WINDOW (885), LCD (TRV55E) | |
| 213 | 3-987-601-41 | WINDOW (885), LCD (TRV45E) | |
| 214 | 3-948-339-01 | SCREW, TAPPING | |
| 215 | X-3948-169-1 | HINGE ASSY | |
| 216 | 3-987-623-01 | CLAMP, HARNESS | |
| 217 | 3-987-626-01 | COVER (C) (885), HINGE | |
| 218 | 3-987-625-11 | COVER (M), HINGE | |
| 219 | 4-981-286-01 | SCREW(M1.7x2), IB LOCK | |
| LCD901 | 1-803-038-21 | INDICATOR MODULE, LIQUID CRYST (TRV45E/TRV55E) | |
| LCD901 | 1-803-037-21 | INDICATOR MODULE, LIQUID CRYST (TRV75/TRV75PK/TRV715) | |
| ⚠ND801 | 1-517-753-11 | TUBE, FLUORESCENT,COLD CATHODE (TRV75/TRV75PK/TRV715) | |
| ⚠ND801 | 1-517-754-11 | TUBE, FLUORESCENT,COLD CATHODE (TRV45E/TRV55E) | |
| ⚠ND802 | 1-517-759-11 | LIGHT, BACK | |

### 6-1-6. LCD BLOCK ASSEMBLY (2.5INCH)( TRV3E/TRV13E/TRV23E/TRV65E/TRV69E)

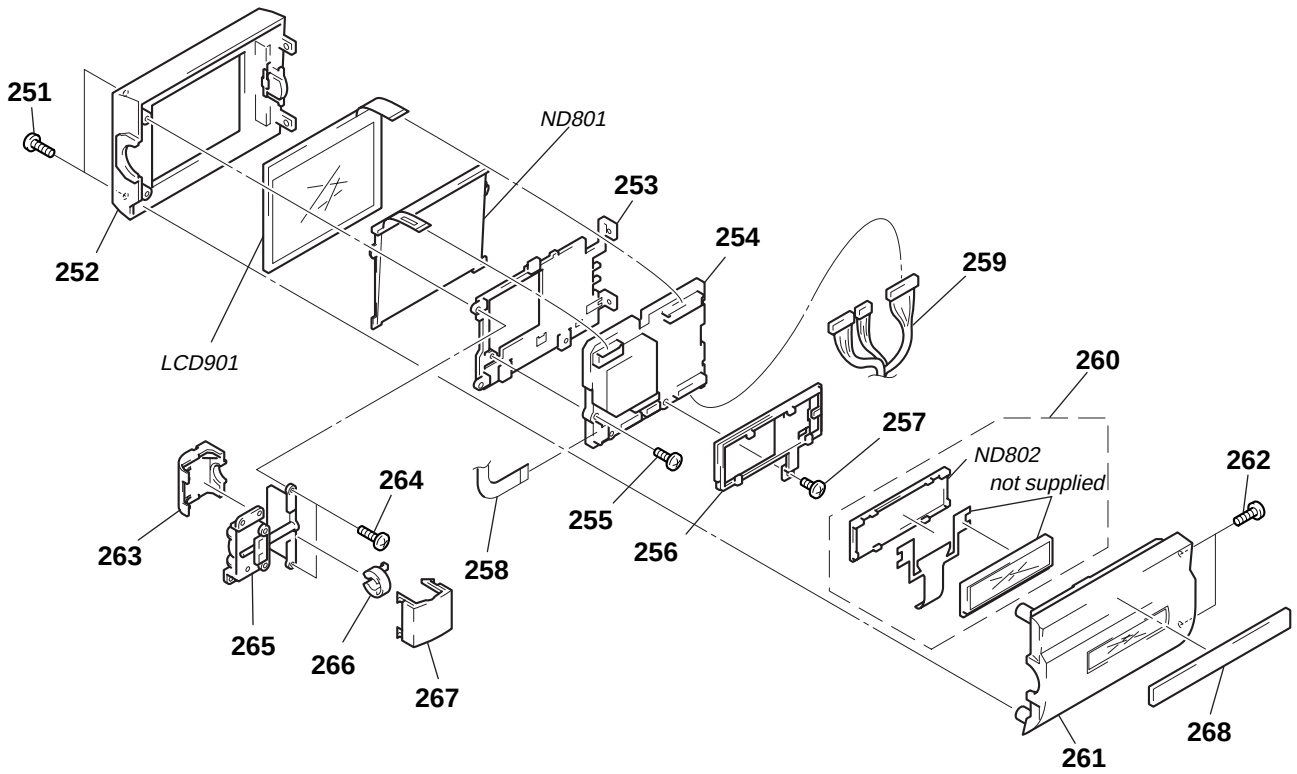


| The components identified by mark ⚠ or dotted line with mark ⚠ are critical for safety. Replace only with part number specified. | Les composants identifiés par une marque ⚠ sont critiques pour la sécurité. Ne les remplacer que par une piéce portant le numéro spécifié. |
|---|---|

| Ref. No. | Part No. | Description | Remark |
|---|---|---|---|
| 251 | 3-948-339-11 | SCREW, TAPPING | |
| 252 | X-3948-162-1 | CABINET (M) (870) ASSY, P | |
| 253 | 3-987-582-01 | FRAME (870), PANEL | |
| 254 | A-7073-502-A | PD-92(SP8) BOARD, COMPLETE (TRV65E) | |
| 254 | A-7073-452-A | PD-92(SP6) BOARD, COMPLETE | (TRV23E/TRV69E) |
| 254 | A-7073-460-A | PD-92(CP6) BOARD, COMPLETE | (TRV3E/TRV13E) |
| 255 | 3-713-786-21 | SCREW (M2X3) | |
| 256 | 3-987-584-01 | HOLDER (870), LCD | (TRV23E:E1,HK,AUS,CN/TRV65E/TRV69E) |
| 256 | 3-987-584-11 | HOLDER (870), LCD | (TRV3E/TRV13E/TRV23E:E2) |
| 257 | 3-948-339-61 | TAPPING | |
| 258 | 1-668-963-41 | FP-642 FLEXIBLE BOARD | |
| 259 | 1-958-379-11 | HARNESS (DP-70) | |
| 260 | A-7093-473-A | INDICATION LCD BLOCK ASSY | (TRV3E/TRV13E) |
| 260 | A-7093-509-A | INDICATION LCD BLOCK ASSY (TRV23E) | |
| 260 | A-7093-486-A | INDICATION LCD BLOCK ASSY | (TRV65E/TRV69E) |
| 261 | X-3948-158-1 | CABINET (C) (870) ASSY, P (TRV65E) | |
| 261 | X-3948-392-1 | CABINET (C) (846) ASSY, P (TRV3E/TRV13E) | |
| 261 | X-3948-160-1 | CABINET (C) (872) ASSY, P (TRV23E) | |
| 261 | X-3948-161-1 | CABINET (C) (878D) ASSY, P (TRV69E) | |
| 262 | 3-962-826-01 | SCREW(2X4) | |
| 263 | 3-987-625-01 | COVER (M), HINGE | |
| 264 | 3-948-339-01 | SCREW, TAPPING | |
| 265 | X-3948-169-1 | HINGE ASSY | |
| 266 | 3-987-623-01 | CLAMP, HARNESS | |
| 267 | 3-987-624-01 | COVER (C) (870), HINGE (TRV65E/TRV69E) | |
| 267 | 3-987-624-11 | COVER (C) (870), HINGE (TRV23E) | |
| 267 | 3-987-624-21 | COVER (C) (870), HINGE (TRV3E/TRV13E) | |
| 268 | 3-987-585-61 | SHEET, MODEL NAME (TRV23E) | |
| 268 | 3-987-585-71 | SHEET, MODEL NAME (TRV13E) | |
| 268 | 3-987-585-81 | SHEET, MODEL NAME (TRV65E) | |
| 268 | 3-987-585-91 | SHEET, MODEL NAME (TRV3E/TRV69E) | |
| LCD901 | 1-803-035-21 | INDICATOR MODULE, LIQUID CRYST (TRV23E) | |
| LCD901 | 1-803-036-21 | INDICATOR MODULE, LIQUID CRYST | (TRV65E/TRV69E) |
| LCD901 | 1-803-040-11 | INDICATOR MODULE, LIQUID CRYST | (TRV3E/TRV13E) |
| ⚠ND801 | 1-517-751-11 | TUBE, FLUORESCENT,COLD CATHODE | (TRV3E/TRV13E) |
| ⚠ND801 | 1-517-752-11 | TUBE, FLUORESCENT,COLD CATHODE (TRV23E) | |
| ⚠ND801 | 1-517-752-21 | TUBE, FLUORESCENT,COLD CATHODE | (TRV65E/TRV69E) |
| ⚠ND802 | 1-517-759-11 | LIGHT, BACK | |

### 6-1-7. EVF BLOCK ASSEMBLY (B/W EVF)

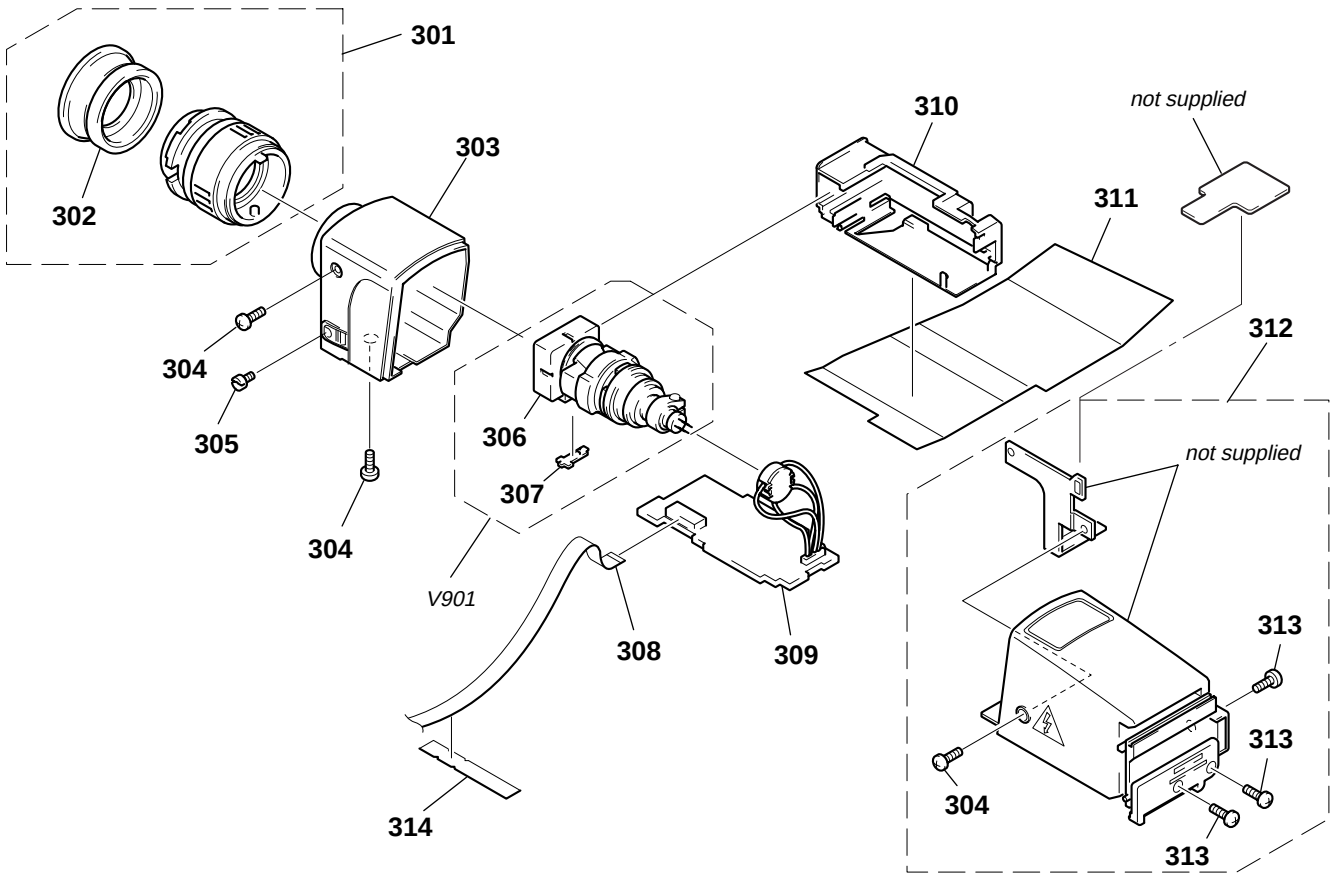


| The components identified by mark ⚠ or dotted line with mark ⚠ are critical for safety. Replace only with part number specified. | Les composants identifiés par une marque ⚠ sont critiques pour la sécurité. Ne les remplacer que par une piéce portant le numéro spécifié. |
|---|---|

| Ref. No. | Part No. | Description | Remark |
|---|---|---|---|
| 301 | X-3944-966-1 | FINDER ASSY | |
| 302 | 3-963-391-01 | EYE CUP | |
| 303 | X-3948-278-1 | CABINET (REAR) (878) B ASSY (TRV3E/TRV13E/TRV23E/TRV65E/TRV69E) | |
| 303 | X-3948-281-1 | CABINET (REAR) (887) B ASSY (TRV45E:AUS,E2/TRV55E/TRV75:US,CND/TRV75PK) | |
| 303 | X-3948-281-2 | CABINET (REAR) (887) B ASSY (TRV45E:E1,CN,HK/TRV55E/TRV75:E,JE/TRV715) | |
| 304 | 3-968-729-61 | SCREW (M2X3), LOCK ACE, P2 | |
| 305 | 3-975-898-01 | SCREW (T), F LOCK | |
| 306 | 3-977-292-01 | MASK, CRT | |
| 307 | 3-725-130-01 | COVER, HINGE VOLTAGE | |
| 308 | 1-783-241-11 | CABLE, FLEXIBLE FLAT (FFC-235) | |
| 309 | A-7066-774-A | VF-99(863) BOARD, COMPLETE (EXCEPT TRV75/TRV75PK/TRV715) | |
| 309 | A-7066-792-A | VF-99(VHL4) BOARD, COMPLETE (TRV75/TRV75PK/TRV715) | |
| 310 | X-3948-279-1 | HOLDER (878) ASSY, CRT | |
| * 311 | 3-987-844-01 | SHEET, VF (B/W) ELECTROSTATIC | |
| 312 | X-3948-277-1 | CABINET (FRONT) (878) B ASSY(TRV65E) | |
| 312 | X-3948-280-1 | CABINET (FRONT) (887) B ASSY (TRV45E:AUS,E2/TRV55E/TRV75:US,CND/TRV75PK) | |
| 312 | X-3948-280-2 | CABINET (FRONT) (887) B ASSY (TRV45E:E1,CN,HK/TRV75:E,JE) | |
| 312 | X-3948-364-1 | CABINET (FRONT) (845) B ASSY (TRV3E/TRV13E) | |
| 312 | X-3948-363-1 | CABINET (FRONT) (872) B ASSY (TRV23ETRV69E) | |
| 312 | X-3948-366-1 | CABINET (FRONT) (887D) B ASSY (TRV715) | |
| 313 | 3-948-339-61 | TAPPING | |
| * 314 | 3-987-843-01 | SHEET, VF FLEXIBLE LOCK | |
| ⚠ V901 | 1-452-673-31 | CRT ASSY (M01KXX90WB) | |

## 6-1-8. MAIN BOARDS ASSEMBLY

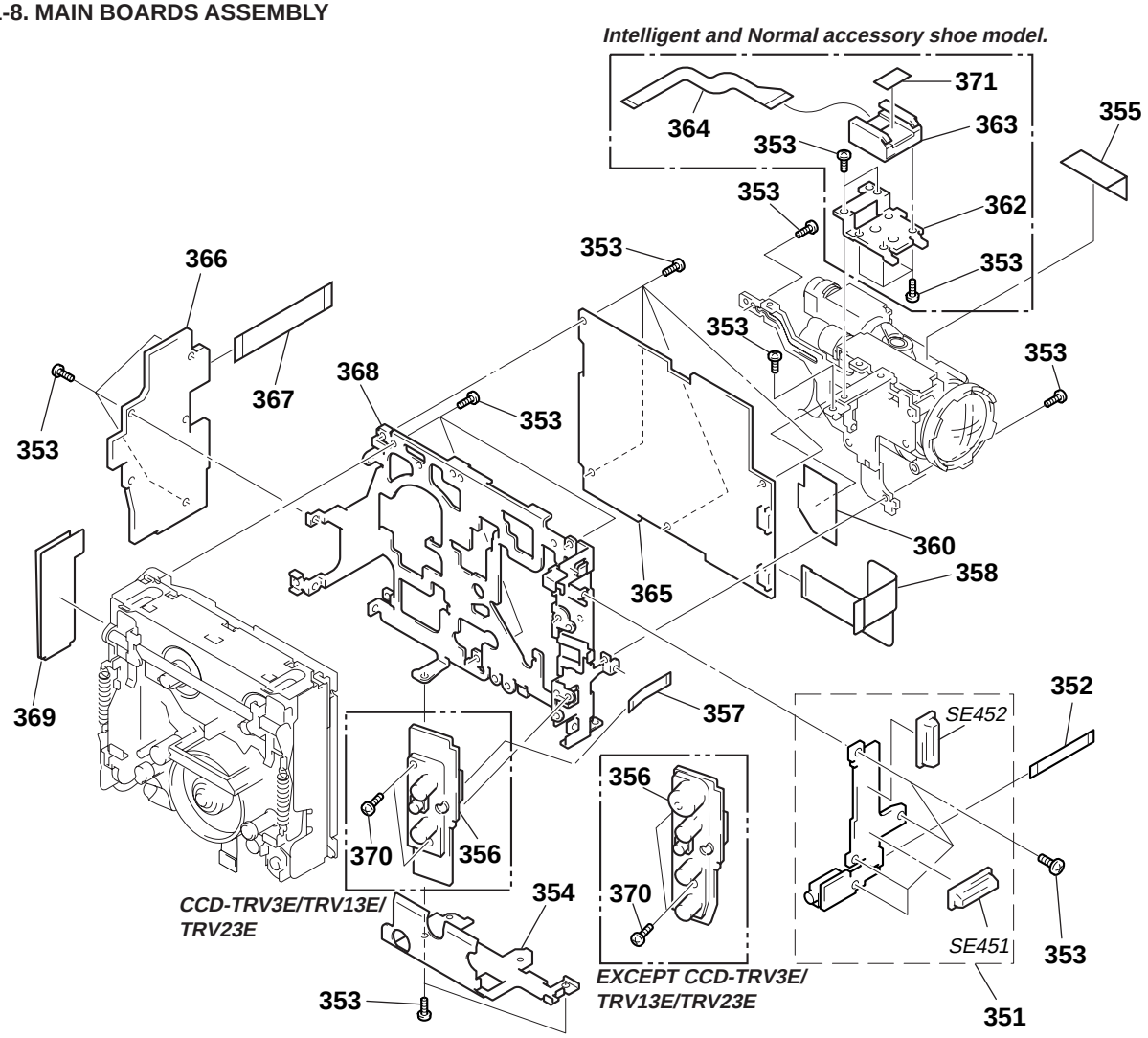


| Ref. No. | Part No. | Description | Remark |
|---|---|---|---|
| 351 | A-7073-404-A | SE-66(V) BOARD, COMPLETE (TRV3E/TRV13E/TRV23E) | |
| 351 | A-7073-409-A | SE-66(VH) BOARD, COMPLETE (TRV65E) | |
| 351 | A-7073-434-A | SE-67(VH) BOARD, COMPLETE (TRV45E/TRV55E/TRV75/TRV75PK/TRV715) | |
| 351 | A-7073-443-A | SE-66(VMM) BOARD, COMPLETE (TRV69E) | |
| 352 | 1-668-957-11 | FP-621 FLEXIBLE BOARD | |
| 353 | 3-713-786-21 | SCREW (M2X3) | |
| * 354 | 3-987-675-01 | FRAME (B), MD (EXCEPT TRV75/TRV75PK/TRV715) | |
| 354 | X-3948-224-1 | FRAME (B) ASSY, MD (TRV75/TRV75PK/TRV715) | |
| * 355 | 3-989-122-01 | SHEET, LENS INSULATING | |
| 356 | A-7073-405-A | PJ-83(M) BOARD, COMPLETE (TRV3E/TRV13E/TRV23E) | |
| 356 | A-7073-410-A | PJ-83(H) BOARD, COMPLETE (TRV65E/TRV69E) | |
| 356 | A-7073-433-A | PJ-84(H) BOARD, COMPLETE (TRV75/TRV75PK/TRV715) | |
| 356 | A-7073-477-A | PJ-84(S) BOARD, COMPLETE (TRV45E/TRV55E) | |
| 357 | 1-668-956-11 | FP-620 FLEXIBLE BOARD | |
| 358 | 1-668-960-11 | FP-629 FLEXIBLE BOARD | |
| * 360 | 3-987-718-01 | PROTECTOR, HS FLEXIBLE (TRV65E/TRV69E) | |
| 362 | 3-987-719-01 | BRACKET, SHOE | |
| 363 | 1-774-867-31 | CONNECTOR,EXTERNAL(HOT SHOE)8P (EXCEPT TRV3E/TRV13E/TRV23E) | |

| Ref. No. | Part No. | Description | Remark |
|---|---|---|---|
| 363 | X-3946-197-1 | SHOE ASSY(TRV23E) | |
| 364 | 1-668-978-11 | FP-633 FLEXIBLE BOARD (EXCEPT TRV3E/TRV13E/TRV23E) | |
| 365 | A-7093-449-A | VC-195(VHI0U) BOARD, COMPLETE (TRV75/TRV75PK/TRV715) | |
| 365 | A-7093-461-A | VC-195(VMOP) BOARD, COMPLETE (TRV45E) | |
| 365 | A-7093-453-A | VC-195(VHOE) BOARD, COMPLETE (TRV65E) | |
| 365 | A-7093-732-A | VC-195(VMM0P) BOARD, COMPLETE (TRV69E) | |
| 365 | A-7093-456-A | VC-195(VZ0P) BOARD, COMPLETE (TRV3E/TRV13E/TRV23E) | |
| 365 | A-7093-460-A | VC-195(VMROP) BOARD, COMPLETE (TRV55E) | |
| 366 | A-7073-408-A | DD-105(VHIF) BOARD, COMPLETE (TRV75:US,CND/TRV715) | |
| 366 | A-7073-416-A | DD-105(VMMI) BOARD, COMPLETE (TRV3E/TRV13E/TRV23E) | |
| 366 | A-7073-481-A | DD-105(VMMIF) BOARD, COMPLETE (TRV45E/TRV55E/TRV65E/TRV69E/TRV75:E,HK,JE/TRV75PK) | |
| 367 | 1-668-958-11 | FP-622 FLEXIBLE BOARD | |
| 368 | 3-987-711-01 | FRAME (A), MD | |
| * 369 | 3-987-716-01 | PROTECTOR, LS FLEXIBLE | |
| 370 | 3-948-339-61 | TAPPING | |
| 371 | 2-532-810-00 | CUSHION (TRV65E/TRV69E) | |
| SE451 | 1-803-041-11 | SENSOR, ANGULAR VELOCITY (YAW) (EXCEPT TRV3E/TRV13E/TRV23E) | |
| SE452 | 1-803-041-21 | SENSOR, ANGULAR VELOCITY (PITCH) (EXCEPT TRV3E/TRV13E/TRV23E) | |

### 6-1-9. BATTERY PANEL AND CCD BLOCK ASSEMBLY

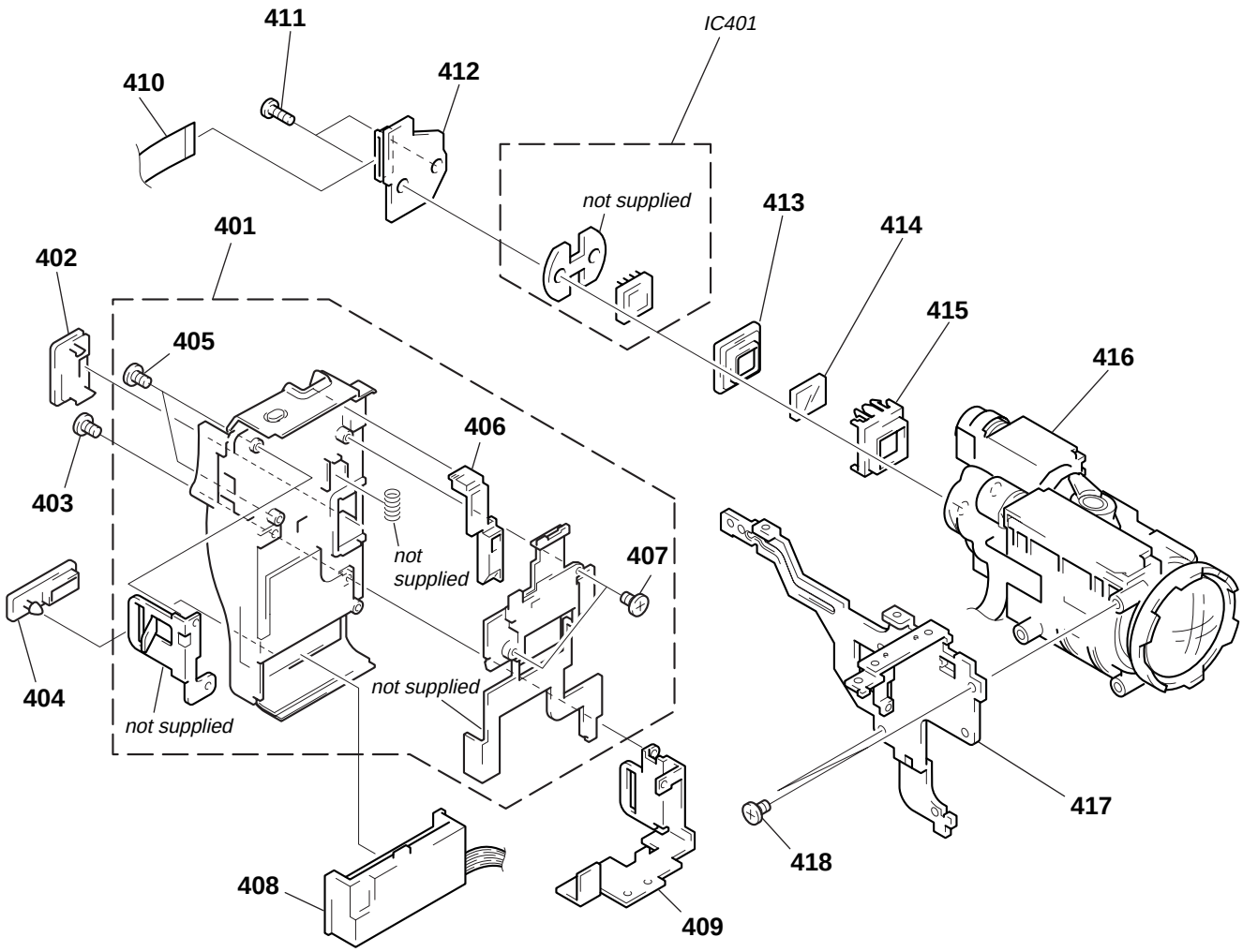


**Be sure to read "Note on the CCD Imager replacement" on page 4–9 when changing the CCD imager.**

| Ref. No. | Part No. | Description | Remark |
|---|---|---|---|
| 401 | X-3948-171-1 | PANEL ASSY, BATTERY (TRV3E/TRV13E/TRV23E/TRV65E/TRV69E) | |
| 401 | X-3948-172-1 | PANEL ASSY, BATTERY (TRV45E/TRV75/TRV75PK/TRV715) | |
| 401 | X-3948-173-1 | PANEL ASSY, BATTER (TRV55E) | |
| 402 | 3-975-752-01 | LID (BT), CPC | |
| 403 | 3-962-826-01 | SCREW (2X4) | |
| * 404 | 3-987-683-01 | LID, BATTERY | |
| 405 | 3-968-729-61 | SCREW (M2X3), LOCK ACE, P2 | |
| 406 | 3-987-656-01 | LID, JACK | |
| 407 | 3-713-791-51 | SCREW (M1.7X3.5), TAPPING, P2 | |
| 408 | 1-694-384-11 | TERMINAL BOARD, BATTERY | |
| 409 | 3-987-679-01 | SHEET METAL (LOWER), STRAP | |
| 410 | 1-668-959-11 | FP-623 FLEXIBLE BOARD | |
| 411 | 3-318-203-11 | SCREW (B1.7X6), TAPPING | |
| 412 | A-7073-407-A | CD-197 BOARD, COMPLETE (TRV3E/TRV13E/TRV23E/TRV65E/TRV69E) | |
| 412 | A-7073-435-A | CD-198 BOARD, COMPLETE (TRV45E/TRV55E/TRV75/TRV75PK/TRV715) | |

| Ref. No. | Part No. | Description | Remark |
|---|---|---|---|
| 413 | 3-953-817-01 | RUBBER (F), SEAL (TRV3E/TRV13E/TRV23E) | |
| 413 | 3-968-054-11 | RUBBER (FM), SHIELD (EXCEPT TRV3E/TRV13E/TRV23E) | |
| 414 | 1-758-084-21 | FILTER BLOCK, OPTICAL (EXCEPT TRV3E/TRV13E/TRV23E) | |
| 414 | 1-758-133-21 | FILTER BLOCK, OPTICAL (TRV3E/TRV13E/TRV23E) | |
| 415 | 3-978-981-11 | ADAPTOR (FK), CCD FITTING | |
| 416 | 8-848-722-01 | DEVICE, LENS LSV-600A (SOC) (EXCEPT TRV3E/TRV13E) | |
| 416 | 8-848-724-01 | DEVICE, LENS LSV-601A (SOC) (TRV3E/TRV13E) | |
| 417 | 3-987-712-01 | FRAME, LENS | |
| 418 | 3-948-339-61 | TAPPING | |
| IC401 | A-7030-865-A | CCD BLOCK ASSY (209 SERVIC) (CCD IMAGER) (TRV75/TRV75PK/TRV715) | |
| IC401 | A-7030-871-A | CCD BLOCK ASSY (211 SERVIC) (CCD IMAGER) (TRV45E/TRV55E/TRV65E/TRV69E) | |
| IC401 | A-7030-874-A | CCD BLOCK ASSY (207 SERVIC) (CCD IMAGER) (TRV3E/TRV13E/TRV23E) | |

## 6-1-10. DEVICE LENS (LSV-600A/LSV-601A)

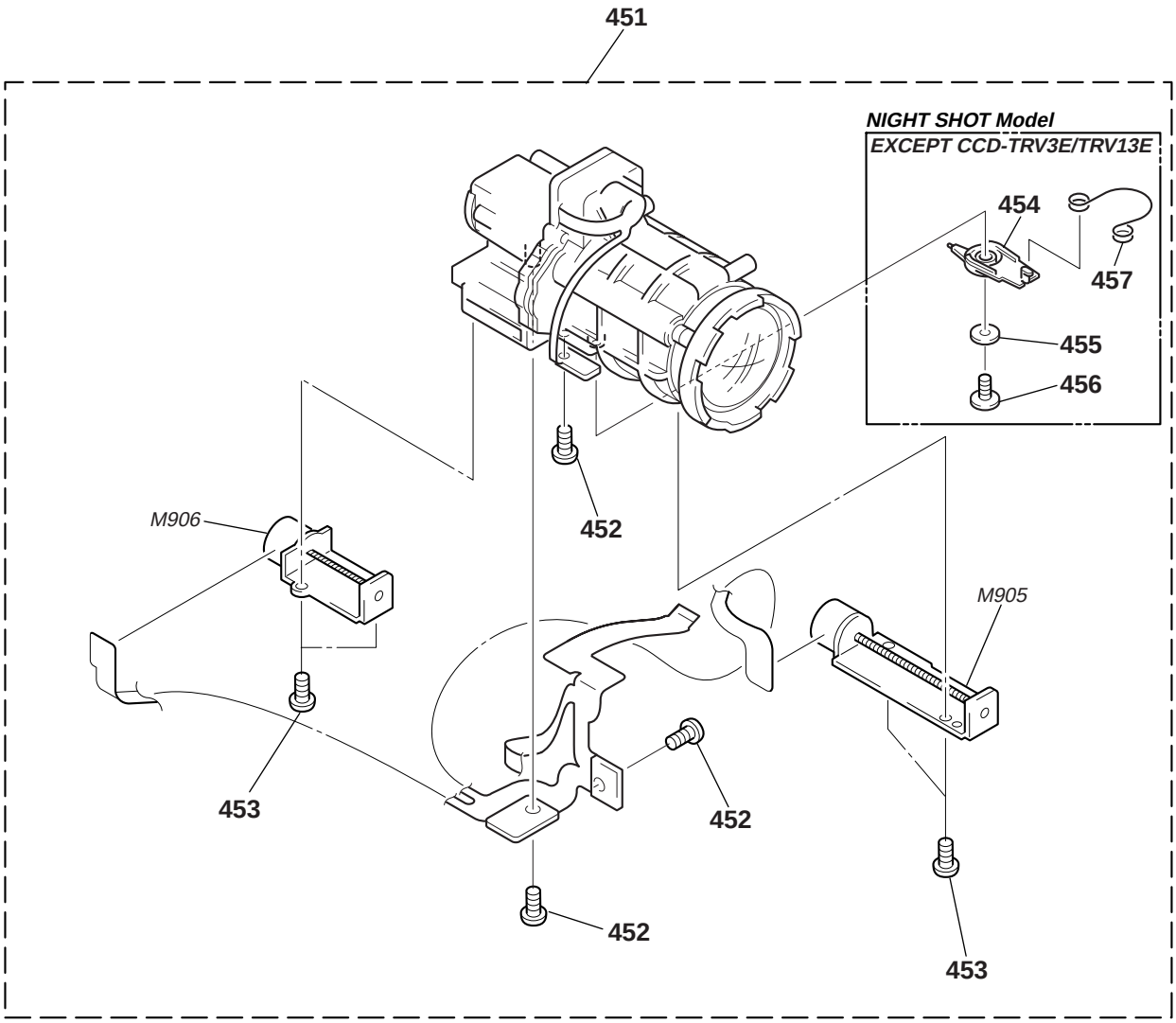


| Ref. No. | Part No. | Description | Remark |
|---|---|---|---|
| 451 | 8-848-722-01 | DEVICE, LENS LSV-600A (SOC)(NIGHT SHOT) (EXCEPT TRV3E/TRV13E) | |
| 451 | 8-848-724-01 | DEVICE, LENS LSV-601A (SOC) (TRV3E/TRV13E) | |
| 452 | 3-713-791-51 | SCREW (M1.7X3.5), TAPPING, P2 | |
| 453 | 3-713-791-41 | SCREW (M1.7X5), TAPPING, PS | |
| 454 | 3-979-029-01 | LEVER, IR | |
| 455 | 2-327-405-01 | WASHER | |
| 456 | 3-623-756-21 | SCREW (B1.7x5), P | |
| 457 | 3-979-037-11 | SPRING, RETURN | |
| M905 | 1-763-047-11 | MOTOR, FOCUS STEPPING | |
| M906 | 1-763-046-11 | MOTOR, ZOOM STEPPING | |

### 6-1-11. CASSETTE COMPARTMENT ASSEMBLY

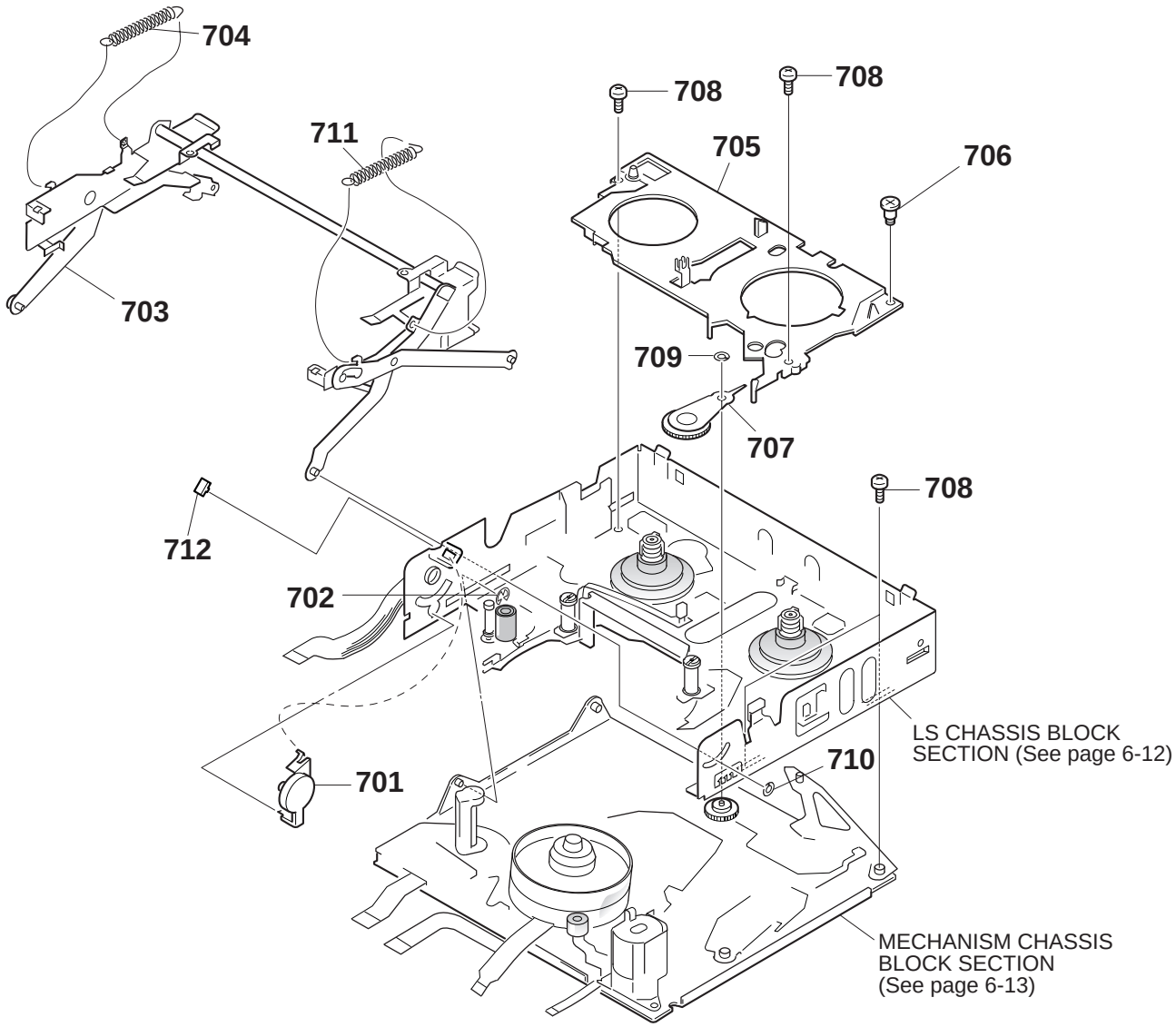


| Ref. No. | Part No. | Description | Remark |
|---|---|---|---|
| 701 | A-7040-421-A | DAMPER ASSY | |
| 702 | 7-624-102-04 | STOP RING 1.5, TYPE -E | |
| 703 | X-3945-400-X | CASSETTE COMPARTMENT ASSY | |
| 704 | 3-965-587-03 | SPRING, TENSION | |
| 705 | 3-965-584-08 | RETAINER, GOOSENECK | |
| 706 | 3-976-055-01 | SCREW (M1.4X1) | |
| 707 | X-3945-399-1 | GEAR ASSY, GOOSENECK | |
| 708 | 3-947-503-01 | SCREW (M1.4X2.5) | |
| 709 | 3-331-007-21 | WASHER | |
| 710 | 3-727-176-01 | WASHER, STOPPER | |
| 711 | 3-973-268-01 | SPRING, TENSION | |
| 712 | 3-971-076-01 | FASTENER, D | |

### 6-1-12. LS CHASSIS ASSEMBLY

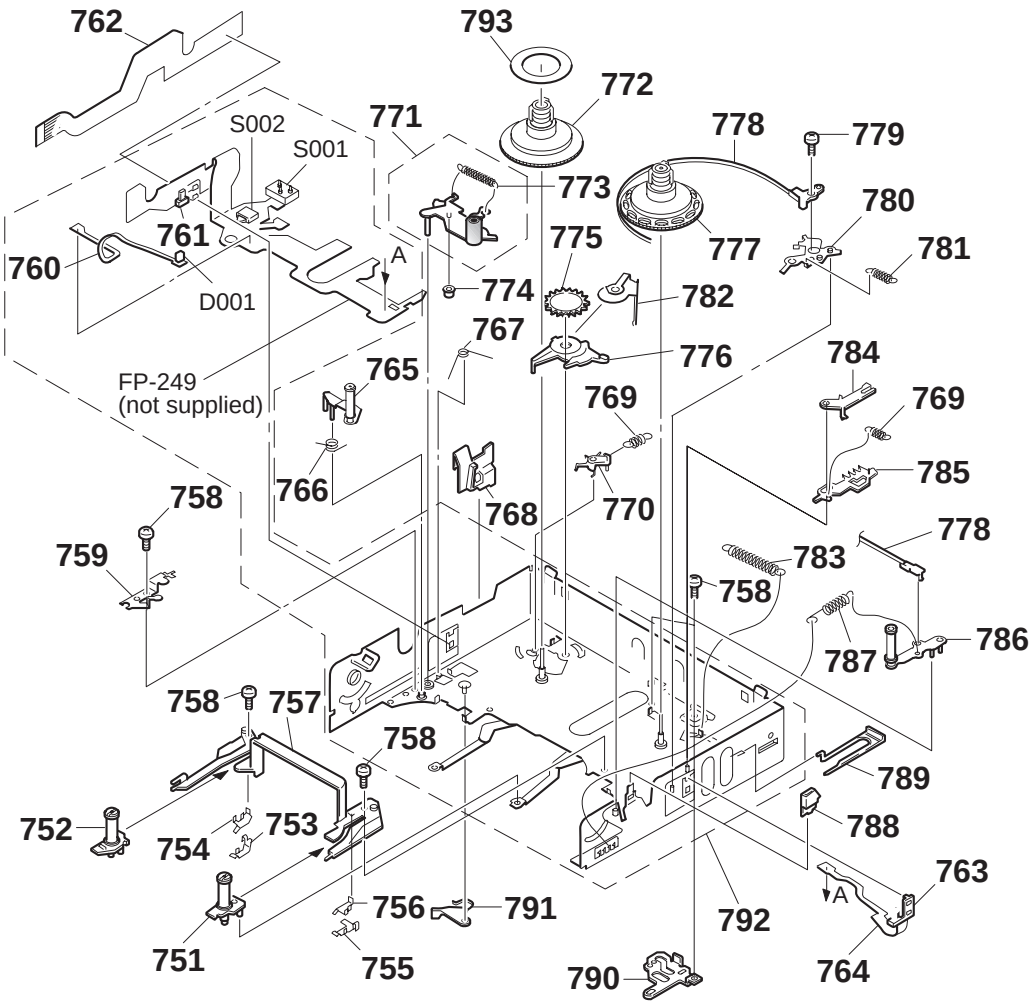


| Ref. No. | Part No. | Description | Remark |
|---|---|---|---|
| 751 | A-7040-419-A | BASE (S) BLOCK ASSY, GUIDE | |
| 752 | A-7040-418-B | BASE (T) BLOCK ASSY, GUIDE | |
| 753 | 3-965-559-01 | STOPPER (T) | |
| 754 | 3-965-557-01 | STOPPER (T), GB | |
| 755 | 3-965-558-01 | STOPPER (S) | |
| 756 | 3-965-556-01 | STOPPER (S), GB | |
| 757 | 3-965-553-01 | RAIL, GUIDE | |
| 758 | 3-947-503-01 | SCREW (M1.4X2.5) | |
| 759 | 3-965-573-01 | RETAINER, TG4 | |
| 760 | 1-658-213-11 | FP-355 FLEXIBLE BOARD | |
| 761 | 3-965-552-01 | HOLDER (T), SENSOR | |
| 762 | 1-657-786-13 | FP-221 FLEXIBLE BOARD | |
| 763 | 3-965-551-01 | HOLDER (S), SENSOR | |
| 764 | 1-658-214-11 | FP-356 FLEXIBLE BOARD | |
| 765 | A-7040-417-A | ARM BLOCK ASSY, TG4 | |
| 766 | 3-965-574-01 | SPRING, TORSION | |
| 767 | 3-965-575-01 | SPRING (PINCH), TORSION | |
| 768 | 3-965-568-01 | GUIDE, LOCK | |
| 769 | 3-965-562-01 | SPRING (RATCHET), TENSION | |
| 770 | 3-965-581-03 | RATCHET, T | |
| 771 | X-3945-394-1 | ARM ASSY, PINCH | |
| 772 | X-3945-398-2 | DECK ASSY, REEL, T | |
| 773 | 3-965-648-01 | SPRING (PINCH), TENSION | |
| 774 | 3-965-579-01 | ROLLER, PINCH PRESS | |

| Ref. No. | Part No. | Description | Remark |
|---|---|---|---|
| 775 | 3-965-563-01 | GEAR, T SOFT | |
| 776 | 3-965-565-01 | CLAW, T SOFT | |
| 777 | X-3945-397-1 | DECK ASSY, REEL, S | |
| 778 | X-3945-396-1 | BAND ASSY, TENSION REGULATOR | |
| 779 | 3-945-756-01 | SCREW (M1.4X3) | |
| 780 | 3-965-583-01 | ARM, RVS | |
| 781 | 3-965-580-01 | SPRING, TENSION | |
| 782 | 3-966-384-01 | SPRING, T SOFT | |
| 783 | 3-965-578-01 | SPRING, TENSION COIL | |
| 784 | 3-965-560-01 | RATCHET, S | |
| 785 | 3-965-561-01 | PLATE, RELEASE, S RATCHET | |
| 786 | X-3945-395-1 | ARM ASSY, TG1 | |
| 787 | 3-965-576-01 | SPRING (TG1), TENSION | |
| 788 | 3-965-567-01 | LID OPEN | |
| 789 | 3-965-566-01 | COVER, LS GUIDE | |
| * 790 | 3-965-577-01 | PLATE, CAM, LS | |
| 791 | 3-965-569-01 | ARM, EJ | |
| 792 | A-7040-427-A | CHASSIS (S1) ASSY, LS | |
| * 793 | 3-972-838-01 | SPACER, REEL | |
| D001 | 8-719-988-42 | DIODE GL453 | |
| S001 | 1-692-614-11 | SWITCH, PUSH (3 KEY) (Hi8 MP, ME/MP, REC PROOF) | |
| S002 | 1-572-688-11 | SWITCH, PUSH (1 KEY)(C.C. LOCK) | |

### 6-1-13. MECHANISM CHASSIS ASSEMBLY

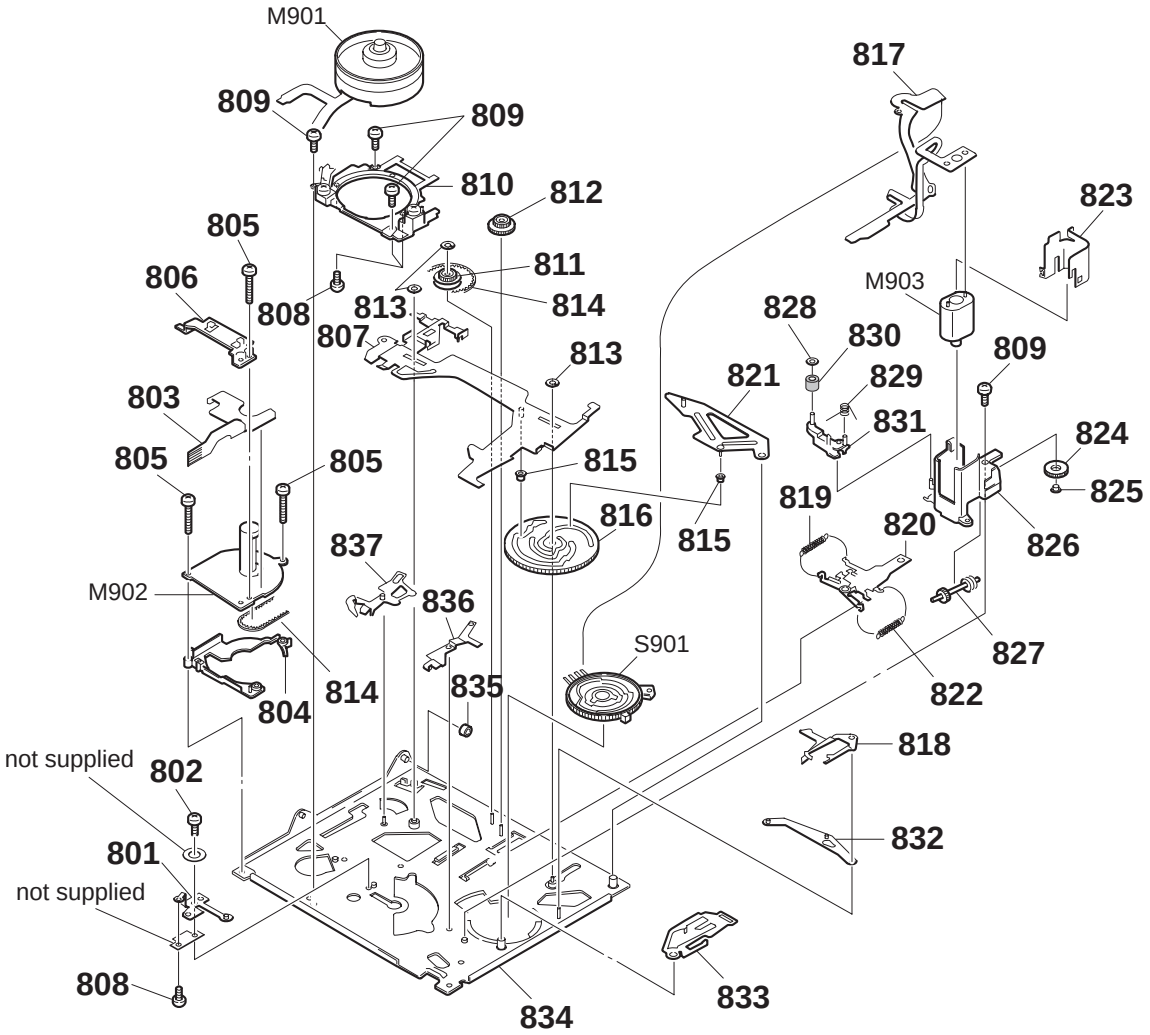


| Ref. No. | Part No. | Description | Remark |
|---|---|---|---|
| 801 | X-3947-343-1 | GROUND (IM) ASSY, SHAFT | |
| 802 | 3-965-550-02 | SCREW (M1.7X1.6) | |
| 803 | 1-657-785-11 | FP-248 FLEXIBLE BOARD | |
| 804 | 3-965-545-01 | SPACER, CAPSTAN | |
| 805 | 3-965-549-01 | SCREW (M1.4 X 6.5) | |
| 806 | 3-966-349-01 | HOLDER, FLEXIBLE | |
| 807 | 3-971-644-01 | SLIDER (2), M | |
| 808 | 3-971-939-01 | SCREW (M1.4) | |
| 809 | 3-947-503-01 | SCREW (M1.4X2.5) | |
| 810 | A-7040-416-A | BASE BLOCK ASSY, DRUM | |
| 811 | 3-965-527-01 | GEAR, CHANGE | |
| 812 | 3-965-544-01 | GEAR, RELAY | |
| 813 | 3-331-007-21 | WASHER | |
| 814 | 3-965-546-01 | BELT, TIMING | |
| 815 | 3-965-533-01 | ROLLER, LS | |
| 816 | 3-965-528-01 | GEAR, CAM | |
| 817 | 1-657-784-11 | FP-220 FLEXIBLE BOARD | |
| 818 | 3-965-529-01 | PLATE, REGULATOR (LIMITTER ARM T), COIL | |
| 819 | 3-965-536-01 | SPRING (LIMITTER ARM T), COIL | |
| 820 | X-3945-388-1 | SLIDER ASSY, GL | |
| 821 | 3-965-532-01 | ARM, LS | |
| 822 | 3-965-535-01 | SPRING (LIMITTER ARM S), COIL | |

| Ref. No. | Part No. | Description | Remark |
|---|---|---|---|
| 823 | 3-965-542-01 | SHIELD, MOTOR | |
| 824 | 3-965-539-01 | GEAR (A) | |
| 825 | 3-965-538-01 | SLEEVE, MOTOR HOLDER | |
| 826 | 3-965-540-01 | HOLDER, MOTOR | |
| 827 | 3-965-541-01 | SHAFT, WORM | |
| 828 | 3-321-393-01 | WASHER, STOPPER | |
| 829 | 3-965-724-01 | SPRING, TORSION | |
| 830 | A-7040-423-A | ROLLER BLOCK ASSY, HC | |
| 831 | X-3945-407-1 | ARM ASSY, HC ROLLER | |
| 832 | 3-965-531-01 | ARM, GL | |
| 833 | 3-965-530-01 | PLATE (2), REGULATOR, TENSION | |
| 834 | X-3947-915-2 | CHASSIS ASSY, MECHANICAL | |
| 835 | 3-965-526-02 | ROLLER, LS GUIDE | |
| 836 | 3-965-547-01 | ARM, HC DRIVING | |
| 837 | 3-965-534-01 | PLATE, PRESS, PINCH | |
| M901 | A-7048-851-A | DRUM ASSY (DGH-0D5A-R)(PAL) (EXCEPT TRV75/TRV75PK/TRV715) | |
| M901 | A-7048-842-A | DRUM ASSY (DGH-0E1A-R)(NTSC)(5HEAD) (TRV75/TRV75PK/TRV715) | |
| M902 | 8-835-531-32 | CAPSTAN ASSY | |
| M903 | X-3945-401-1 | MOTOR ASSY, DC (LOADING) | |
| S901 | 1-762-436-15 | SWITCH, ROTARY (ENCODER) | |

## 6-2. ELECTRICAL PARTS LIST

Note:

The components identified by mark ⚠ or dotted line with mark ⚠ are critical for safety.
Replace only with part number specified.

Les composants identifiés par une marque ⚠ sont critiques pour la sécurité.
Ne les remplacer que par une piéce portant le numéro spécifié.

When indicating parts by reference number, please include the board name.

- Due to standardization, replacements in the parts list may be different from the parts specified in the diagrams or the components used on the set.
- -XX, -X mean standardized parts, so they may have some difference from the original one.
- Items marked "*" are not stocked since they are seldom required for routine service. Some delay should be anticipated when ordering these items.
- RESISTORS
  All resistors are in ohms
  METAL: Metal-film resistor
  METAL OXIDE: Metal Oxide-film resistor
  F : nonflammable
- SEMICONDUCTORS
  In each case, u: μ , for example:
  uA...: μ A..., uPA...: μ PA..., uPB...: μ PB..., uPC...: μ PC..., uPD...: μ PD...
- CAPACITORS
  uF : μ F
- COILS
  uH : μ H
- Abbreviation
  CND : Canadian Model
  EE : East European Model
  NE : North European Model
  RU : Russian Model
  HK : Hong Kong Model
  AUS : Australian Model
  JE : Tourist Model
  CN : Chinese Model

| Ref. No. | Part No. | Description | | | Remark |
|---|---|---|---|---|---|
| | A-7073-407-A | CD-197 BOARD, COMPLETE (TRV3E/TRV13E/TRV23E/TRV65E/TRV69E) | | | |
| | | ********** | | | |
| | | | | | (Ref. No. 4000 series) |
| | A-7073-435-A | CD-198 BOARD, COMPLETE (TRV45E/TRV55E/TRV75/TRV75PK/TRV715) | | | |
| | | ********** | | | |
| | | | | | (Ref. No. 9000 series) |
| | | (IC401 is not including to the mounted board) | | | |
| | | < CAPACITOR > | | | |
| C401 | 1-164-156-11 | CERAMIC CHIP | 0.1uF | | 25V |
| C405 | 1-135-210-11 | TANTALUM CHIP | 4.7uF | 20% | 10V |
| C406 | 1-135-214-21 | TANTAL. CHIP | 4.7uF | 20% | 20V |
| | | < CONNECTOR > | | | |
| CN401 | 1-766-346-21 | CONNECTOR, FFC/FPC 16P | | | |
| | | < IC > | | | |
| IC401 | A-7030-865-A | CCD BLOCK ASSY (209 SERVICE)(CCD IMAGER) (TRV75/TRV75PK/TRV715) | | | |
| IC401 | A-7030-871-A | CCD BLOCK ASSY (211 SERVICE)(CCD IMAGER) (TRV45E/TRV55E/TRV65E/TRV69E) | | | |
| IC401 | A-7030-874-A | CCD BLOCK ASSY (207 SERVICE)(CCD IMAGER) (TRV3E/TRV13E/TRV23E) | | | |
| | | < COIL > | | | |
| L401 | 1-414-757-11 | INDUCTOR | 100uH | | |
| | | < TRANSISTOR > | | | |
| Q402 | 8-729-117-73 | TRANSISTOR | 2SC4178-F13F14-T1 | | |
| | | < RESISTOR > | | | |
| R404 | 1-216-829-11 | METAL CHIP | 4.7K | 5% | 1/16W |
| R405 | 1-216-809-11 | METAL CHIP | 100 | 5% | 1/16W |

| Ref. No. | Part No. | Description | | | Remark |
|---|---|---|---|---|---|
| | A-7073-403-A | CF-50(E7V) BOARD, COMPLETE (TRV3E/TRV13E) | | | |
| | | ********** | | | |
| | A-7073-412-A | CF-50(ESV) BOARD, COMPLETE (TRV23E/TRV65E/TRV69E) | | | |
| | | ********** | | | |
| | | | | | (Ref. No. 4000 series) |
| | A-7073-431-A | CF-51(VH) BOARD, COMPLETE (TRV45E/TRV75/TRV75PK/TRV715) | | | |
| | | ********** | | | |
| | A-7073-479-A | CF-51(VMR) BOARD, COMPLETE (TRV55E) | | | |
| | | ********** | | | |
| | | | | | (Ref. No. 9000 series) |
| | | < BATTERY HOLDER > | | | |
| BH001 | 1-550-104-11 | HOLDER, BATTERY | | | |
| | | < CONNECTOR > | | | |
| CN001 | 1-778-637-21 | CONNECTOR, FFC/FPC (ZIF) 50P | | | |
| CN002 | 1-774-765-11 | CONNECTOR, FFC/FPC 8P (EXCEPT TRV3E/TRV13E/TRV23E) | | | |
| CN003 | 1-580-055-21 | PIN, CONNECTOR 2P | | | |
| CN005 | 1-779-064-11 | PIN, CONNECTOR (PC BOARD) 12P | | | |
| CN006 | 1-778-508-21 | PIN, CONNECTOR (PC BOARD) 6P | | | |
| * CN008 | 1-778-283-11 | CONNECTOR, FFC/FPC 4P | | | |
| | | < DIODE > | | | |
| D001 | 8-719-059-57 | DIODE | MAZJ082DFLSO | | |
| D001 | 8-719-064-61 | DIODE | 01BZA8.2(TE85L) | | |
| D005 | 8-719-420-14 | DIODE | MA8082-TX | | |
| D006 | 8-719-420-14 | DIODE | MA8082-TX | | |
| D008 | 8-719-404-49 | DIODE | MA111-TX | | |
| | | < TRANSISTOR > | | | |
| Q001 | 8-729-402-42 | TRANSISTOR | UN5213-TX | | |
| Q003 | 8-729-230-63 | TRANSISTOR | 2SD1819A-QRS-TX (EXCEPT TRV3E/TRV13E/TRV23E) | | |
| Q005 | 8-729-230-72 | TRANSISTOR | 2SA1362-YG-EL (EXCEPT TRV3E/TRV13E/TRV23E) | | |
| | | < RESISTOR > | | | |
| R003 | 1-216-833-11 | METAL CHIP | 10K | 5% | 1/16W (EXCEPT TRV3E/TRV13E/TRV23E) |
| R005 | 1-216-833-11 | METAL CHIP | 10K | 5% | 1/16W |
| R006 | 1-216-833-11 | METAL CHIP | 10K | 5% | 1/16W |
| R007 | 1-216-833-11 | METAL CHIP | 10K | 5% | 1/16W |
| R008 | 1-216-833-11 | METAL CHIP | 10K | 5% | 1/16W |

**Be sure to read "Note on the CCD Imager replacement" on page 4–9 when changing the CCD imager.**

| Ref. No. | Part No. | Description | | | Remark |
|---|---|---|---|---|---|
| R009 | 1-216-833-11 | METAL CHIP | 10K | 5% | 1/16W |
| R013 | 1-216-822-11 | METAL CHIP | 1.2K | 5% | 1/16W |
| R015 | 1-216-822-11 | METAL CHIP | 1.2K | 5% | 1/16W |
| R016 | 1-216-822-11 | METAL CHIP | 1.2K | 5% | 1/16W |
| R019 | 1-216-823-11 | METAL CHIP | 1.5K | 5% | 1/16W |
| R020 | 1-216-823-11 | METAL CHIP | 1.5K | 5% | 1/16W |
| R022 | 1-216-823-11 | METAL CHIP | 1.5K | 5% | 1/16W |
| R023 | 1-216-825-11 | METAL CHIP | 2.2K | 5% | 1/16W |
| R025 | 1-216-825-11 | METAL CHIP | 2.2K | 5% | 1/16W |
| R026 | 1-216-825-11 | METAL CHIP | 2.2K | 5% | 1/16W |
| R029 | 1-216-828-11 | METAL CHIP | 3.9K | 5% | 1/16W |
| R031 | 1-216-828-11 | METAL CHIP | 3.9K | 5% | 1/16W |
| R032 | 1-216-828-11 | METAL CHIP | 3.9K | 5% | 1/16W |
| R036 | 1-216-832-11 | METAL CHIP | 8.2K | 5% | 1/16W |
| R038 | 1-216-832-11 | METAL CHIP | 8.2K | 5% | 1/16W |
| R039 | 1-216-838-11 | METAL CHIP | 27K | 5% | 1/16W |
| R041 | 1-216-838-11 | METAL CHIP | 27K | 5% | 1/16W |
| R049 | 1-216-849-11 | METAL CHIP | 220K | 5% | 1/16W (EXCEPT TRV3E/TRV13E/TRV23E) |
| R050 | 1-216-853-11 | METAL CHIP | 470K | 5% | 1/16W (EXCEPT TRV3E/TRV13E/TRV23E) |
| R051 | 1-216-837-11 | METAL CHIP | 22K | 5% | 1/16W (EXCEPT TRV3E/TRV13E/TRV23E) |
| R052 | 1-216-829-11 | METAL CHIP | 4.7K | 5% | 1/16W (EXCEPT TRV3E/TRV13E/TRV23E) |
| R053 | 1-216-864-11 | METAL CHIP | 0 | 5% | 1/16W (TRV3E/TRV13E) |
| | | < SWITCH > | | | |
| S001 | 1-762-851-21 | SWITCH, KEY BOARD (DIGITAL EFFECT) | | | (TRV55E) |
| S012 | 1-771-029-31 | SWITCH, TACTILE (EXPOSURE) | | | (EXCEPT TRV3E/TRV13E) |
| S003 | 1-762-851-21 | SWITCH, KEY BOARD (DATE) | | | |
| S004 | 1-771-029-21 | SWITCH, TACTILE (PROGRAM AE) | | | |
| S006 | 1-762-851-21 | SWITCH, KEY BOARD (PICTURE EFFECT) | | | |
| S008 | 1-762-851-21 | SWITCH, KEY BOARD (COUNTER RESET) | | | |
| S010 | 1-762-851-21 | SWITCH, KEY BOARD (MENU) | | | |
| S013 | 1-762-851-21 | SWITCH, KEY BOARD (END SEARCH) | | | |
| S015 | 1-771-025-21 | SWITCH, ROTARY (ENCODER)(SEL/PUSH ESEC) | | | |
| S017 | 1-771-029-21 | SWITCH, TACTILE (BACK LIGHT) | | | |
| S018 | 1-762-851-21 | SWITCH, KEY BOARD (TITLE) | | | |
| S021 | 1-762-851-21 | SWITCH, KEY BOARD (TIME) | | | |
| S022 | 1-762-851-21 | SWITCH, KEY BOARD (DISPLAY) | | | |
| S024 | 1-762-648-21 | SWITCH, SLIDE (START/STOP MODE) | | | |
| S027 | 1-771-029-31 | SWITCH, TACTILE (FADER) | | | (TRV45E/TRV55E/TRV75/TRV75PK/TRV715) |

| | | |
|---|---|---|
| | A-7073-408-A | DD-105 (VHIF) BOARD, COMPLETE (TRV75:US,CND/TRV715) |
| | | ********** |
| | A-7073-416-A | DD-105(VMMI) BOARD, COMPLETE (TRV3E/TRV13E/TRV23E) |
| | | ********** |
| | A-7073-481-A | DD-105(VHI) BOARD, COMPLETE (TRV45E/TRV55E/TRV65E/TRV69E/TRV75:E,JE/75PK) |
| | | ********** |
| | | (Ref. No. 2000 series) |

| Ref. No. | Part No. | Description | | | Remark |
|---|---|---|---|---|---|
| | | < CAPACITOR > | | | |
| C801 | 1-162-967-11 | CERAMIC CHIP | 0.0033uF | 10% | 50V |
| C802 | 1-162-960-11 | CERAMIC CHIP | 220PF | 10% | 50V |
| C803 | 1-107-826-11 | CERAMIC CHIP | 0.1uF | 10% | 16V |
| C804 | 1-107-826-11 | CERAMIC CHIP | 0.1uF | 10% | 16V |
| C805 | 1-107-826-11 | CERAMIC CHIP | 0.1uF | 10% | 16V |
| C806 | 1-107-826-11 | CERAMIC CHIP | 0.1uF | 10% | 16V |
| C807 | 1-162-970-11 | CERAMIC CHIP | 0.01uF | 10% | 25V |
| C808 | 1-164-227-11 | CERAMIC CHIP | 0.022uF | 10% | 25V |
| C809 | 1-162-967-11 | CERAMIC CHIP | 0.0033uF | 10% | 50V |
| C810 | 1-164-227-11 | CERAMIC CHIP | 0.022uF | 10% | 25V |
| C811 | 1-162-965-11 | CERAMIC CHIP | 0.0015uF | 10% | 50V |
| C812 | 1-162-964-11 | CERAMIC CHIP | 0.001uF | 10% | 50V |
| C813 | 1-162-964-11 | CERAMIC CHIP | 0.001uF | 10% | 50V |
| C814 | 1-104-913-11 | TANTAL. CHIP | 10uF | 20% | 16V |
| C815 | 1-162-964-11 | CERAMIC CHIP | 0.001uF | 10% | 50V |
| C816 | 1-119-751-11 | TANTAL. CHIP | 22uF | 20% | 16V |
| C817 | 1-113-991-11 | TANTAL. CHIP | 33uF | 20% | 16V |
| C819 | 1-162-964-11 | CERAMIC CHIP | 0.001uF | 10% | 50V |
| C820 | 1-162-964-11 | CERAMIC CHIP | 0.001uF | 10% | 50V |
| C821 | 1-162-964-11 | CERAMIC CHIP | 0.001uF | 10% | 50V |
| C822 | 1-104-913-11 | TANTAL. CHIP | 10uF | 20% | 16V |
| C823 | 1-115-566-11 | CERAMIC CHIP | 4.7uF | 10% | 10V |
| C824 | 1-115-566-11 | CERAMIC CHIP | 4.7uF | 10% | 10V |
| C825 | 1-115-566-11 | CERAMIC CHIP | 4.7uF | 10% | 10V |
| C826 | 1-115-566-11 | CERAMIC CHIP | 4.7uF | 10% | 10V |
| C827 | 1-164-227-11 | CERAMIC CHIP | 0.022uF | 10% | 25V |
| C828 | 1-162-962-11 | CERAMIC CHIP | 470PF | 10% | 50V |
| C829 | 1-162-966-11 | CERAMIC CHIP | 0.0022uF | 10% | 50V |
| C830 | 1-162-966-11 | CERAMIC CHIP | 0.0022uF | 10% | 50V |
| C831 | 1-164-489-11 | CERAMIC CHIP | 0.22uF | 10% | 16V |
| C832 | 1-115-566-11 | CERAMIC CHIP | 4.7uF | 10% | 10V |
| C833 | 1-162-974-11 | CERAMIC CHIP | 0.01uF | | 50V |
| C834 | 1-115-566-11 | CERAMIC CHIP | 4.7uF | 10% | 10V |
| C836 | 1-115-566-11 | CERAMIC CHIP | 4.7uF | 10% | 10V |
| C837 | 1-115-566-11 | CERAMIC CHIP | 4.7uF | 10% | 10V |
| C838 | 1-115-566-11 | CERAMIC CHIP | 4.7uF | 10% | 10V |
| C840 | 1-115-566-11 | CERAMIC CHIP | 4.7uF | 10% | 10V |
| C841 | 1-135-157-21 | TANTALUM CHIP | 10uF | 20% | 6.3V |
| C843 | 1-135-157-21 | TANTALUM CHIP | 10uF | 20% | 6.3V |
| C844 | 1-135-157-21 | TANTALUM CHIP | 10uF | 20% | 6.3V |
| C846 | 1-135-157-21 | TANTALUM CHIP | 10uF | 20% | 6.3V |
| C847 | 1-164-506-11 | CERAMIC CHIP | 4.7uF | | 16V |
| C848 | 1-164-506-11 | CERAMIC CHIP | 4.7uF | | 16V |
| C849 | 1-135-157-21 | TANTALUM CHIP | 10uF | 20% | 6.3V |
| C850 | 1-135-157-21 | TANTALUM CHIP | 10uF | 20% | 6.3V |
| C851 | 1-135-157-21 | TANTALUM CHIP | 10uF | 20% | 6.3V |
| C852 | 1-164-505-11 | CERAMIC CHIP | 2.2uF | | 16V |
| C853 | 1-165-319-11 | CERAMIC CHIP | 0.1uF | | 50V |
| C855 | 1-135-157-21 | TANTALUM CHIP | 10uF | 20% | 6.3V |
| C856 | 1-109-982-11 | CERAMIC CHIP | 1uF | 10% | 10V (EXCEPT TRV3E/TRV13E/TRV23E) |
| C857 | 1-135-157-21 | TANTALUM CHIP | 10uF | 20% | 6.3V |
| C860 | 1-107-826-11 | CERAMIC CHIP | 0.1uF | 10% | 16V |
| C861 | 1-162-968-11 | CERAMIC CHIP | 0.0047uF | 10% | 50V |
| C862 | 1-164-227-11 | CERAMIC CHIP | 0.022uF | 10% | 25V |
| C863 | 1-164-227-11 | CERAMIC CHIP | 0.022uF | 10% | 25V |

| Ref. No. | Part No. | Description | | | Remark |
|---|---|---|---|---|---|
| C864 | 1-113-985-11 | TANTAL. CHIP | 10uF | 20% | 20V |
| C865 | 1-164-505-11 | CERAMIC CHIP | 2.2uF | | 16V |
| C866 | 1-164-505-11 | CERAMIC CHIP | 2.2uF | | 16V |
| C868 | 1-135-214-21 | TANTAL. CHIP | 4.7uF | 20% | 20V |
| C869 | 1-164-505-11 | CERAMIC CHIP | 2.2uF | | 16V |
| C871 | 1-135-157-21 | TANTALUM CHIP | 10uF | 20% | 6.3V |
| C872 | 1-164-227-11 | CERAMIC CHIP | 0.022uF | 10% | 25V |
| C873 | 1-164-227-11 | CERAMIC CHIP | 0.022uF | 10% | 25V |
| C875 | 1-164-489-11 | CERAMIC CHIP | 0.22uF | 10% | 16V |
| C876 | 1-107-826-11 | CERAMIC CHIP | 0.1uF | 10% | 16V |
| C877 | 1-107-826-11 | CERAMIC CHIP | 0.1uF | 10% | 16V |
| | | < CONNECTOR > | | | |
| * CN801 | 1-580-756-21 | PIN, CONNECTOR 7P | | | |
| CN931 | 1-691-520-11 | CONNECTOR, BOARD TO BOARD 48P | | | |
| CN932 | 1-766-346-21 | CONNECTOR, FFC/FPC 16P | | | |
| CN933 | 1-778-509-21 | PIN, CONNECTOR (PC BOARD) 11P | | | |
| CN934 | 1-766-673-21 | CONNECTOR, FFC/FPC 12P | | | |
| CN935 | 1-764-709-11 | CONNECTOR, FFC/FPC (LIF) 10P | | | |
| | | < DIODE > | | | |
| D801 | 8-719-067-36 | DIODE | MA3ZD1200LS0 | | |
| D802 | 8-719-067-36 | DIODE | MA3ZD1200LS0 | | |
| D803 | 8-719-067-36 | DIODE | MA3ZD1200LS0 | | |
| D804 | 8-719-067-36 | DIODE | MA3ZD1200LS0 | | |
| D805 | 8-719-067-36 | DIODE | MA3ZD1200LS0 | | |
| D806 | 8-719-027-76 | DIODE | 1SS357-TPH3 | | |
| D807 | 8-719-067-36 | DIODE | MA3ZD1200LS0 | | |
| D809 | 8-719-027-77 | DIODE | MA796-TX | | |
| D810 | 8-719-027-76 | DIODE | 1SS357-TPH3 | | |
| D812 | 8-719-027-76 | DIODE | 1SS357-TPH3 | | |
| D813 | 8-719-420-14 | DIODE | MA8082-TX | | |
| D814 | 8-719-420-14 | DIODE | MA8082-TX | | |
| D815 | 8-719-420-14 | DIODE | MA8082-TX | | |
| D816 | 8-719-027-76 | DIODE | 1SS357-TPH3 | | |
| D817 | 8-719-421-27 | DIODE | MA728-TX | | |
| D818 | 8-719-027-76 | DIODE | 1SS357-TPH3 | | |
| D819 | 8-719-404-49 | DIODE | MA111-TX | | |
| | | | (EXCEPT TRV3E/TRV13E/TRV23E) | | |
| D932 | 8-719-062-16 | DIODE | 01ZA8.2(TPL3) | | |
| D932 | 8-719-045-87 | DIODE | MA4Z082WA-(K8).SO | | |
| D933 | 8-719-062-16 | DIODE | 01ZA8.2(TPL3) | | |
| D933 | 8-719-045-87 | DIODE | MA4Z082WA-(K8).SO | | |
| D934 | 8-719-062-16 | DIODE | 01ZA8.2(TPL3) | | |
| D934 | 8-719-045-87 | DIODE | MA4Z082WA-(K8).SO | | |
| D935 | 8-719-062-16 | DIODE | 01ZA8.2(TPL3) | | |
| D935 | 8-719-045-87 | DIODE | MA4Z082WA-(K8).SO | | |
| D936 | 8-719-062-16 | DIODE | 01ZA8.2(TPL3) | | |
| D936 | 8-719-045-87 | DIODE | MA4Z082WA-(K8).SO | | |
| D938 | 8-719-420-14 | DIODE | MA8082-TX | | |
| | | < FERRITE BEAD > | | | |
| FB931 | 1-414-228-11 | INDUCTOR CHIP | 0UH | | |
| FB932 | 1-414-228-11 | INDUCTOR CHIP | 0UH | | |
| FB933 | 1-414-228-11 | INDUCTOR CHIP | 0UH | | |
| FB934 | 1-414-228-11 | INDUCTOR CHIP | 0UH | | |

| Ref. No. | Part No. | Description | | Remark |
|---|---|---|---|---|
| | | < IC > | | |
| IC801 | 8-759-384-78 | IC | SN104241PM-TEB | |
| IC802 | 8-759-492-30 | IC | MB3817PFV-G-BND | |
| | | < COIL > | | |
| L804 | 1-412-056-11 | INDUCTOR CHIP | 4.7uH | |
| L805 | 1-424-674-11 | INDUCTOR | 0uH | |
| L806 | 1-409-532-41 | INDUCTOR | 0uH | |
| L806 | 1-424-675-11 | INDUCTOR | 0uH | |
| L807 | 1-424-674-11 | INDUCTOR | 0uH | |
| L808 | 1-424-674-11 | INDUCTOR | 0uH | |
| L809 | 1-424-674-11 | INDUCTOR | 0uH | |
| L810 | 1-414-396-21 | INDUCTOR | 4.7uH | |
| L811 | 1-414-396-21 | INDUCTOR | 4.7uH | |
| L812 | 1-414-396-21 | INDUCTOR | 4.7uH | |
| L813 | 1-414-396-21 | INDUCTOR | 4.7uH | |
| L814 | 1-414-396-21 | INDUCTOR | 4.7uH | |
| L815 | 1-414-396-21 | INDUCTOR | 4.7uH | |
| L817 | 1-414-396-21 | INDUCTOR | 4.7uH | |
| L818 | 1-414-396-21 | INDUCTOR | 4.7uH | |
| L819 | 1-414-400-11 | INDUCTOR | 22uH | |
| L820 | 1-424-674-11 | INDUCTOR | 0uH | |
| | | < LINE FILTER > | | |
| LF801 | 1-411-957-11 | FILTER, COMMON MODE | | |
| | | < IC LINK > | | |
| ⚠ PS801 | 1-533-760-21 | FUSE (SMD) 1.4A (TRV75:US,CND/TRV715) | | |
| ⚠ PS801 | 1-533-761-21 | LINK, IC (SMD) 1.4A | | |
| | | | (EXCEPT TRV75:US,CND/TRV715) | |
| ⚠ PS802 | 1-533-760-21 | FUSE (SMD) 1.4A (TRV75:US,CND/TRV715) | | |
| ⚠ PS802 | 1-533-761-21 | LINK, IC (SMD) 1.4A | | |
| | | | (EXCEPT TRV75:US,CND/TRV715) | |
| ⚠ PS803 | 1-533-760-21 | FUSE (SMD) 1.4A (TRV75:US,CND/TRV715) | | |
| ⚠ PS803 | 1-533-761-21 | LINK, IC (SMD) 1.4A | | |
| | | | (EXCEPT TRV75:US,CND/TRV715) | |
| ⚠ PS804 | 1-533-760-21 | FUSE (SMD) 1.4A (TRV75:US,CND/TRV715) | | |
| ⚠ PS804 | 1-533-761-21 | LINK, IC (SMD) 1.4A | | |
| | | | (EXCEPT TRV75:US,CND/TRV715) | |
| ⚠ PS805 | 1-533-760-21 | FUSE (SMD) 1.4A (TRV75:US,CND/TRV715) | | |
| ⚠ PS805 | 1-533-761-21 | LINK, IC (SMD) 1.4A | | |
| | | | (EXCEPT TRV75:US,CND/TRV715) | |
| ⚠ PS806 | 1-533-760-21 | FUSE (SMD) 1.4A (TRV75:US,CND/TRV715) | | |
| ⚠ PS806 | 1-533-761-21 | LINK, IC (SMD) 1.4A | | |
| | | | (TRV45E/TRV55E/TRV65E/TRV69E/TRV75:E,JE/75PK) | |
| | | < TRANSISTOR > | | |
| Q801 | 8-729-024-48 | TRANSISTOR | 2SK1830-TE85L | |
| Q802 | 8-729-041-69 | TRANSISTOR | MMSF5P02HDR2 | |
| Q803 | 8-729-804-41 | TRANSISTOR | 2SB1122-ST-TD | |
| Q804 | 8-729-037-74 | TRANSISTOR | UN9213J-(K8).SO | |
| Q805 | 8-729-024-48 | TRANSISTOR | 2SK1830-TE85L | |
| Q806 | 8-729-037-74 | TRANSISTOR | UN9213J-(K8).SO | |
| Q807 | 8-729-804-41 | TRANSISTOR | 2SB1122-ST-TD | |
| Q808 | 8-729-043-94 | TRANSISTOR | CPH3106-PM-TL | |
| Q809 | 8-729-043-94 | TRANSISTOR | CPH3106-PM-TL | |
| Q810 | 8-729-043-94 | TRANSISTOR | CPH3106-PM-TL | |

| | |
|---|---|
| The components identified by mark ⚠ or dotted line with mark ⚠ are critical for safety.<br>Replace only with part number specified. | Les composants identifiés par une marque ⚠ sont critiques pour la sécurité.<br>Ne les remplacer que par une piéce portant le numéro spécifié. |

| Ref. No. | Part No. | Description | Remark |
|---|---|---|---|
| Q812 | 8-729-041-24 | TRANSISTOR NDS355AN | |
| Q813 | 8-729-037-53 | TRANSISTOR 2SA1832F-Y/GR(TPL3) | |
| Q814 | 8-729-043-94 | TRANSISTOR CPH3106-PM-TL | |
| Q815 | 8-729-043-94 | TRANSISTOR CPH3106-PM-TL | |
| Q817 | 8-729-041-24 | TRANSISTOR NDS355AN | |
| Q819 | 8-729-043-94 | TRANSISTOR CPH3106-PM-TL | |
| Q820 | 8-729-037-74 | TRANSISTOR UN9213J-(K8).SO | |
| | | (EXCEPT TRV3E/TRV13E/TRV23E) | |
| Q824 | 8-729-042-56 | TRANSISTOR MGSF3455VT1 | |
| | | (EXCEPT TRV3E/TRV13E/TRV23E) | |
| Q823 | 8-729-037-74 | TRANSISTOR UN9213J-(K8).SO | |
| Q826 | 8-729-037-74 | TRANSISTOR UN9213J-(K8).SO | |
| Q827 | 8-729-037-61 | TRANSISTOR RN2104F(TPL3) | |
| Q828 | 8-729-037-74 | TRANSISTOR UN9213J-(K8).SO | |
| Q829 | 8-729-037-53 | TRANSISTOR 2SA1832F-Y/GR(TPL3) | |
| Q830 | 8-729-037-52 | TRANSISTOR 2SC4738F-Y/GR(TPL3) | |
| Q831 | 8-729-041-23 | TRANSISTOR NDS356AP | |
| Q832 | 8-729-041-23 | TRANSISTOR NDS356AP | |
| Q833 | 8-729-041-23 | TRANSISTOR NDS356AP | |
| Q834 | 8-729-037-53 | TRANSISTOR 2SA1832F-Y/GR(TPL3) | |
| Q835 | 8-729-037-52 | TRANSISTOR 2SC4738F-Y/GR(TPL3) | |
| Q836 | 8-729-037-53 | TRANSISTOR 2SA1832F-Y/GR(TPL3) | |
| Q838 | 8-729-037-53 | TRANSISTOR 2SA1832F-Y/GR(TPL3) | |
| Q839 | 8-729-037-52 | TRANSISTOR 2SC4738F-Y/GR(TPL3) | |
| Q840 | 8-729-037-53 | TRANSISTOR 2SA1832F-Y/GR(TPL3) | |
| Q842 | 8-729-037-52 | TRANSISTOR 2SC4738F-Y/GR(TPL3) | |
| Q843 | 8-729-037-53 | TRANSISTOR 2SA1832F-Y/GR(TPL3) | |
| Q844 | 8-729-037-53 | TRANSISTOR 2SA1832F-Y/GR(TPL3) | |
| Q845 | 8-729-037-52 | TRANSISTOR 2SC4738F-Y/GR(TPL3) | |
| Q847 | 8-729-037-52 | TRANSISTOR 2SC4738F-Y/GR(TPL3) | |
| Q848 | 8-729-037-52 | TRANSISTOR 2SC4738F-Y/GR(TPL3) | |
| Q849 | 8-729-037-53 | TRANSISTOR 2SA1832F-Y/GR(TPL3) | |
| Q850 | 8-729-037-52 | TRANSISTOR 2SC4738F-Y/GR(TPL3) | |
| Q851 | 8-729-041-69 | TRANSISTOR MMSF5P02HDR2 | |
| Q852 | 8-729-017-61 | TRANSISTOR 2SB1581-T1 | |
| Q853 | 8-729-037-53 | TRANSISTOR 2SA1832F-Y/GR(TPL3) | |
| Q854 | 8-729-037-52 | TRANSISTOR 2SC4738F-Y/GR(TPL3) | |
| Q855 | 8-729-037-52 | TRANSISTOR 2SC4738F-Y/GR(TPL3) | |
| Q856 | 8-729-037-52 | TRANSISTOR 2SC4738F-Y/GR(TPL3) | |
| Q932 | 8-729-037-74 | TRANSISTOR UN9213J-(K8).SO | |
| Q933 | 8-729-037-74 | TRANSISTOR UN9213J-(K8).SO | |
| Q934 | 8-729-037-53 | TRANSISTOR 2SA1832F-Y/GR(TPL3) | |

< RESISTOR >

| Ref. No. | Part No. | Description | | | |
|---|---|---|---|---|---|
| R801 | 1-216-841-11 | METAL CHIP | 47K | 5% | 1/16W |
| R802 | 1-218-893-11 | RES,CHIP | 82K | 0.50% | 1/16W |
| R803 | 1-216-833-11 | METAL CHIP | 10K | 5% | 1/16W |
| R804 | 1-216-837-11 | METAL CHIP | 22K | 5% | 1/16W |
| R805 | 1-216-835-11 | METAL CHIP | 15K | 5% | 1/16W |
| R806 | 1-218-879-11 | RES,CHIP | 22K | 0.50% | 1/16W |
| R807 | 1-216-839-11 | METAL CHIP | 33K | 5% | 1/16W |
| R808 | 1-218-879-11 | RES,CHIP | 22K | 0.50% | 1/16W |
| R809 | 1-216-813-11 | METAL CHIP | 220 | 5% | 1/16W |
| R810 | 1-216-837-11 | METAL CHIP | 22K | 5% | 1/16W |
| R811 | 1-218-883-11 | RES,CHIP | 33K | 0.50% | 1/16W |
| R812 | 1-218-901-11 | RES,CHIP | 180K | 0.50% | 1/16W |
| R813 | 1-216-857-11 | METAL CHIP | 1M | 5% | 1/16W |
| R814 | 1-218-879-11 | RES,CHIP | 22K | 0.50% | 1/16W |
| R815 | 1-216-813-11 | METAL CHIP | 220 | 5% | 1/16W |
| R816 | 1-218-879-11 | RES,CHIP | 22K | 0.50% | 1/16W |
| R817 | 1-218-879-11 | RES,CHIP | 22K | 0.50% | 1/16W |
| R818 | 1-216-813-11 | METAL CHIP | 220 | 5% | 1/16W |
| R819 | 1-218-887-11 | RES,CHIP | 47K | 0.50% | 1/16W |
| R820 | 1-216-845-11 | METAL CHIP | 100K | 5% | 1/16W |
| R821 | 1-218-879-11 | RES,CHIP | 22K | 0.50% | 1/16W |
| R822 | 1-216-150-91 | RES,CHIP | 10 | 5% | 1/8W |
| R824 | 1-216-837-11 | METAL CHIP | 22K | 5% | 1/16W |
| R825 | 1-218-879-11 | RES,CHIP | 22K | 0.50% | 1/16W |
| R826 | 1-216-821-11 | METAL CHIP | 1K | 5% | 1/16W |
| R827 | 1-216-821-11 | METAL CHIP | 1K | 5% | 1/16W |
| R828 | 1-216-831-11 | METAL CHIP | 6.8K | 5% | 1/16W |
| R829 | 1-216-837-11 | METAL CHIP | 22K | 5% | 1/16W |
| R830 | 1-218-883-11 | RES,CHIP | 33K | 0.50% | 1/16W |
| R831 | 1-216-841-11 | METAL CHIP | 47K | 5% | 1/16W |
| R832 | 1-218-879-11 | RES,CHIP | 22K | 0.50% | 1/16W |
| R833 | 1-216-839-11 | METAL CHIP | 33K | 5% | 1/16W |
| R834 | 1-218-883-11 | RES,CHIP | 33K | 0.50% | 1/16W |
| R835 | 1-218-879-11 | RES,CHIP | 22K | 0.50% | 1/16W |
| R836 | 1-216-837-11 | METAL CHIP | 22K | 5% | 1/16W |
| R837 | 1-216-825-11 | METAL CHIP | 2.2K | 5% | 1/16W |
| R838 | 1-216-837-11 | METAL CHIP | 22K | 5% | 1/16W |
| R839 | 1-216-837-11 | METAL CHIP | 22K | 5% | 1/16W |
| R840 | 1-216-839-11 | METAL CHIP | 33K | 5% | 1/16W |
| R841 | 1-216-834-11 | METAL CHIP | 12K | 5% | 1/16W |
| R842 | 1-218-903-11 | RES,CHIP | 220K | 0.50% | 1/16W |
| R843 | 1-218-895-11 | RES,CHIP | 100K | 0.50% | 1/16W |
| R845 | 1-218-847-11 | RES,CHIP | 1K | 0.50% | 1/16W |
| R849 | 1-216-837-11 | METAL CHIP | 22K | 5% | 1/16W |
| R850 | 1-216-857-11 | METAL CHIP | 1M | 5% | 1/16W |
| R852 | 1-218-851-11 | RES,CHIP | 1.5K | 0.50% | 1/16W |
| R853 | 1-216-849-11 | METAL CHIP | 220K | 5% | 1/16W |
| R854 | 1-218-887-11 | RES,CHIP | 47K | 0.50% | 1/16W |
| R859 | 1-216-845-11 | METAL CHIP | 100K | 5% | 1/16W |
| | | | (EXCEPT TRV3E/TRV13E/TRV23E) | | |
| R864 | 1-216-857-11 | METAL CHIP | 1M | 5% | 1/16W |
| | | | (EXCEPT TRV3E/TRV13E/TRV23E) | | |
| R865 | 1-216-841-11 | METAL CHIP | 47K | 5% | 1/16W |
| R866 | 1-216-837-11 | METAL CHIP | 22K | 5% | 1/16W |
| R868 | 1-216-849-11 | METAL CHIP | 220K | 5% | 1/16W |
| R870 | 1-216-857-11 | METAL CHIP | 1M | 5% | 1/16W |
| R871 | 1-216-857-11 | METAL CHIP | 1M | 5% | 1/16W |
| R872 | 1-216-845-11 | METAL CHIP | 100K | 5% | 1/16W |
| R873 | 1-216-841-11 | METAL CHIP | 47K | 5% | 1/16W |
| R874 | 1-216-857-11 | METAL CHIP | 1M | 5% | 1/16W |
| R875 | 1-216-849-11 | METAL CHIP | 220K | 5% | 1/16W |
| R876 | 1-216-845-11 | METAL CHIP | 100K | 5% | 1/16W |
| R878 | 1-216-857-11 | METAL CHIP | 1M | 5% | 1/16W |
| R879 | 1-216-837-11 | METAL CHIP | 22K | 5% | 1/16W |
| R880 | 1-218-895-11 | RES,CHIP | 100K | 0.50% | 1/16W |
| R881 | 1-216-864-11 | METAL CHIP | 0 | 5% | 1/16W |
| R882 | 1-218-903-11 | RES,CHIP | 220K | 0.50% | 1/16W |
| R883 | 1-216-841-11 | METAL CHIP | 47K | 5% | 1/16W |
| R884 | 1-216-845-11 | METAL CHIP | 100K | 5% | 1/16W |
| R887 | 1-216-849-11 | METAL CHIP | 220K | 5% | 1/16W |
| R888 | 1-216-845-11 | METAL CHIP | 100K | 5% | 1/16W |
| R890 | 1-216-845-11 | METAL CHIP | 100K | 5% | 1/16W |
| R891 | 1-218-895-11 | RES,CHIP | 100K | 0.50% | 1/16W |
| R892 | 1-218-903-11 | RES,CHIP | 220K | 0.50% | 1/16W |
| R893 | 1-216-835-11 | METAL CHIP | 15K | 5% | 1/16W |
| R895 | 1-216-837-11 | METAL CHIP | 22K | 5% | 1/16W |
| R896 | 1-218-903-11 | RES,CHIP | 220K | 0.50% | 1/16W |

| Ref. No. | Part No. | Description | | | Remark |
|---|---|---|---|---|---|
| R897 | 1-218-891-11 | RES,CHIP | 68K | 0.50% | 1/16W |
| R900 | 1-218-895-11 | RES,CHIP | 100K | 0.50% | 1/16W |
| R901 | 1-218-887-11 | RES,CHIP | 47K | 0.50% | 1/16W |
| R902 | 1-216-864-11 | METAL CHIP | 0 | 5% | 1/16W |
| R903 | 1-216-845-11 | METAL CHIP | 100K | 5% | 1/16W |
| R904 | 1-216-849-11 | METAL CHIP | 220K | 5% | 1/16W |
| R905 | 1-218-901-11 | RES,CHIP | 180K | 0.50% | 1/16W |
| R906 | 1-216-833-11 | METAL CHIP | 10K | 5% | 1/16W |
| R907 | 1-218-903-11 | RES,CHIP | 220K | 0.50% | 1/16W |
| R908 | 1-216-841-11 | METAL CHIP | 47K | 5% | 1/16W |
| R910 | 1-216-833-11 | METAL CHIP | 10K | 5% | 1/16W |
| R911 | 1-218-883-11 | RES,CHIP | 33K | 0.50% | 1/16W |
| R912 | 1-218-879-11 | RES,CHIP | 22K | 0.50% | 1/16W |
| R913 | 1-216-857-11 | METAL CHIP | 1M | 5% | 1/16W |
| R914 | 1-216-811-11 | METAL CHIP | 150 | 5% | 1/16W |
| R915 | 1-218-911-11 | RES,CHIP | 470K | 0.50% | 1/16W |
| R917 | 1-216-864-11 | METAL CHIP | 0 | 5% | 1/16W |
| R918 | 1-216-849-11 | METAL CHIP | 220K | 5% | 1/16W |
| R921 | 1-216-296-91 | SHORT | 0 | | |
| R922 | 1-216-296-91 | SHORT | 0 | | |
| R923 | 1-216-296-91 | SHORT | 0 | | |
| R924 | 1-216-849-11 | METAL CHIP | 220K | 5% | 1/16W |
| R932 | 1-216-841-11 | METAL CHIP | 47K | 5% | 1/16W |
| R933 | 1-216-821-11 | METAL CHIP | 1K | 5% | 1/16W |
| R934 | 1-216-821-11 | METAL CHIP | 1K | 5% | 1/16W |
| R935 | 1-216-821-11 | METAL CHIP | 1K | 5% | 1/16W |
| R936 | 1-216-821-11 | METAL CHIP | 1K | 5% | 1/16W |
| R937 | 1-216-821-11 | METAL CHIP | 1K | 5% | 1/16W |
| R938 | 1-216-821-11 | METAL CHIP | 1K | 5% | 1/16W |
| R939 | 1-216-821-11 | METAL CHIP | 1K | 5% | 1/16W |
| R940 | 1-216-819-11 | METAL CHIP | 680 | 5% | 1/16W |
| R941 | 1-216-821-11 | METAL CHIP | 1K | 5% | 1/16W |
| R942 | 1-216-821-11 | METAL CHIP | 1K | 5% | 1/16W |
| R943 | 1-216-029-00 | METAL CHIP | 150 | 5% | 1/10W |
| | | < TRANSFORMER > | | | |
| ⚠T801 | 1-429-565-21 | TRANSFORMER, CONVERTER | | | |

FP-249 BOARD, COMPLETE (Not supplyed)
**********
(Ref. No. 10000 series)

| | | |
|---|---|---|
| 1-658-214-11 | FP-356 FLEXIBLE BOARD | |
| 3-965-551-01 | HOLDER (S), SENSOR | |
| 3-965-552-01 | HOLDER (T), SENSOR | |
| | < HALL ELEMENT > | |
| H001 | 8-719-033-37 | ELEMENT, HALL HW-105C |
| H002 | 8-719-033-37 | ELEMENT, HALL HW-105C |
| | < TRANSISTOR > | |
| Q001 | 8-729-907-25 | PHOTO TRANSISTOR PT4850F |
| Q002 | 8-729-907-25 | PHOTO TRANSISTOR PT4850F |
| | < SWITCH > | |
| S001 | 1-692-614-11 | SWITCH, PUSH (3 KEY) (Hi8 MP, ME/MP, REC PROOF) |
| S002 | 1-572-688-11 | SWITCH, PUSH (1 KEY)(C.C LOCK) |

| Ref. No. | Part No. | Description | Remark |
|---|---|---|---|
| | 1-658-213-11 | FP-355 FLEXIBLE BOARD | |
| | | ********** (Ref. No. 10000 series) | |
| | | < DIODE > | |
| D991 | 8-719-988-42 | DIODE GL453 | |

| | | |
|---|---|---|
| A-7073-451-A | MA-331(VMM0) BOARD, COMPLETE (TRV23E) | |
| | ********** | |
| A-7073-476-A | MA-331(VZL) BOARD, COMPLETE (TRV3E/TRV13E) | |
| | ********** | |
| A-7073-501-A | MA-331(VH0) BOARD, COMPLETE (TRV65E/TRV69E) | |
| | ********** (Ref. No. 4000 series) | |
| A-7073-430-A | MA-312(VHI) BOARD, COMPLETE (TRV75/TRV75PK/TRV715) | |
| | ********** | |
| A-7073-478-A | MA-312(VH0) BOARD, COMPLETE (TRV45E/TRV55E) | |
| | ********** (Ref. No. 9000 series) | |

< CAPACITOR >

| | | | | | |
|---|---|---|---|---|---|
| C301 | 1-107-686-11 | TANTAL. CHIP | 4.7uF | 20% | 16V (TRV75/TRV75PK/TRV715) |
| C302 | 1-107-826-11 | CERAMIC CHIP | 0.1uF | 10% | 16V (TRV75/TRV75PK/TRV715) |
| C303 | 1-107-826-11 | CERAMIC CHIP | 0.1uF | 10% | 16V (TRV75/TRV75PK/TRV715) |
| C304 | 1-107-826-11 | CERAMIC CHIP | 0.1uF | 10% | 16V (TRV75/TRV75PK/TRV715) |
| C305 | 1-107-826-11 | CERAMIC CHIP | 0.1uF | 10% | 16V (TRV75/TRV75PK/TRV715) |
| C306 | 1-135-259-11 | TANTAL. CHIP | 10uF | 20% | 6.3V (EXCEPT TRV3E/TRV13E) |
| C321 | 1-163-809-11 | CERAMIC CHIP | 0.047uF | 10% | 25V (TRV3E/TRV13E/TRV23E) |
| C322 | 1-115-467-11 | CERAMIC CHIP | 0.22uF | 10% | 10V (TRV3E/TRV13E/TRV23E) |
| C323 | 1-162-927-11 | CERAMIC CHIP | 100PF | 5% | 50V (TRV3E/TRV13E/TRV23E) |
| C324 | 1-109-982-11 | CERAMIC CHIP | 1uF | 10% | 10V |
| C325 | 1-162-970-11 | CERAMIC CHIP | 0.01uF | 10% | 25V |
| C326 | 1-119-749-11 | TANTAL. CHIP | 33uF | 20% | 4V (TRV3E/TRV13E/TRV23E) |
| C327 | 1-110-563-11 | CERAMIC CHIP | 0.068uF | 10% | 16V (TRV3E/TRV13E/TRV23E) |
| C328 | 1-107-826-11 | CERAMIC CHIP | 0.1uF | 10% | 16V (TRV3E/TRV13E/TRV23E) |
| C329 | 1-162-927-11 | CERAMIC CHIP | 100PF | 5% | 50V (TRV3E/TRV13E/TRV23E) |
| C330 | 1-109-982-11 | CERAMIC CHIP | 1uF | 10% | 10V |
| C331 | 1-107-826-11 | CERAMIC CHIP | 0.1uF | 10% | 16V (TRV3E/TRV13E/TRV23E) |

| | |
|---|---|
| The components identified by mark ⚠ or dotted line with mark ⚠ are critical for safety.<br>Replace only with part number specified. | Les composants identifiés par une marque ⚠ sont critiques pour la sécurité.<br>Ne les remplacer que par une piéce portant le numéro spécifié. |

| Ref. No. | Part No. | Description | Remark |
|---|---|---|---|
| C332 | 1-162-927-11 | CERAMIC CHIP 100PF 5% 50V | (TRV3E/TRV13E/TRV23E) |
| C333 | 1-162-927-11 | CERAMIC CHIP 100PF 5% 50V | (EXCEPT TRV3E/TRV13E/TRV23E) |
| C334 | 1-107-826-11 | CERAMIC CHIP 0.1uF 10% 16V | (EXCEPT TRV3E/TRV13E/TRV23E) |
| C335 | 1-162-970-11 | CERAMIC CHIP 0.01uF 10% 25V | (EXCEPT TRV3E/TRV13E/TRV23E) |
| C336 | 1-162-927-11 | CERAMIC CHIP 100PF 5% 50V | (EXCEPT TRV3E/TRV13E/TRV23E) |
| C337 | 1-135-259-11 | TANTAL. CHIP 10uF 20% 6.3V | (EXCEPT TRV3E/TRV13E/TRV23E) |
| C338 | 1-162-964-11 | CERAMIC CHIP 0.001uF 10% 50V | (EXCEPT TRV3E/TRV13E/TRV23E) |
| C339 | 1-164-227-11 | CERAMIC CHIP 0.022uF 10% 25V | (EXCEPT TRV3E/TRV13E/TRV23E) |
| C340 | 1-162-927-11 | CERAMIC CHIP 100PF 5% 50V | (EXCEPT TRV3E/TRV13E/TRV23E) |
| C341 | 1-165-176-11 | CERAMIC CHIP 0.047uF 10% 16V | (EXCEPT TRV3E/TRV13E/TRV23E) |
| C342 | 1-164-227-11 | CERAMIC CHIP 0.022uF 10% 25V | (EXCEPT TRV3E/TRV13E/TRV23E) |
| C343 | 1-162-970-11 | CERAMIC CHIP 0.01uF 10% 25V | (EXCEPT TRV3E/TRV13E/TRV23E) |
| C344 | 1-164-004-11 | CERAMIC CHIP 0.1uF 10% 25V | (EXCEPT TRV3E/TRV13E/TRV23E) |
| C345 | 1-107-826-11 | CERAMIC CHIP 0.1uF 10% 16V | (EXCEPT TRV3E/TRV13E/TRV23E) |
| C346 | 1-164-227-11 | CERAMIC CHIP 0.022uF 10% 25V | (EXCEPT TRV3E/TRV13E/TRV23E) |
| C348 | 1-164-004-11 | CERAMIC CHIP 0.1uF 10% 25V | (EXCEPT TRV3E/TRV13E/TRV23E) |
| C349 | 1-107-826-11 | CERAMIC CHIP 0.1uF 10% 16V | (EXCEPT TRV3E/TRV13E/TRV23E) |
| C350 | 1-135-259-11 | TANTAL. CHIP 10uF 20% 6.3V | (EXCEPT TRV3E/TRV13E/TRV23E) |
| C351 | 1-164-227-11 | CERAMIC CHIP 0.022uF 10% 25V | (EXCEPT TRV3E/TRV13E/TRV23E) |
| C352 | 1-162-964-11 | CERAMIC CHIP 0.001uF 10% 50V | (EXCEPT TRV3E/TRV13E/TRV23E) |
| C353 | 1-162-927-11 | CERAMIC CHIP 100PF 5% 50V | (EXCEPT TRV3E/TRV13E/TRV23E) |
| C354 | 1-165-176-11 | CERAMIC CHIP 0.047uF 10% 16V | (EXCEPT TRV3E/TRV13E/TRV23E) |
| C355 | 1-164-245-11 | CERAMIC CHIP 0.015uF 10% 25V | (EXCEPT TRV3E/TRV13E/TRV23E) |
| C356 | 1-164-227-11 | CERAMIC CHIP 0.022uF 10% 25V | (EXCEPT TRV3E/TRV13E/TRV23E) |
| C357 | 1-164-245-11 | CERAMIC CHIP 0.015uF 10% 25V | (EXCEPT TRV3E/TRV13E/TRV23E) |
| C358 | 1-164-227-11 | CERAMIC CHIP 0.022uF 10% 25V | (EXCEPT TRV3E/TRV13E/TRV23E) |
| C359 | 1-162-968-11 | CERAMIC CHIP 0.0047uF 10% 50V | (EXCEPT TRV3E/TRV13E/TRV23E) |
| C360 | 1-164-227-11 | CERAMIC CHIP 0.022uF 10% 25V | (EXCEPT TRV3E/TRV13E/TRV23E) |
| C361 | 1-164-227-11 | CERAMIC CHIP 0.022uF 10% 25V | (EXCEPT TRV3E/TRV13E/TRV23E) |
| C362 | 1-164-227-11 | CERAMIC CHIP 0.022uF 10% 25V | (EXCEPT TRV3E/TRV13E/TRV23E) |
| C363 | 1-162-968-11 | CERAMIC CHIP 0.0047uF 10% 50V | (EXCEPT TRV3E/TRV13E/TRV23E) |
| C364 | 1-164-245-11 | CERAMIC CHIP 0.015uF 10% 25V | (EXCEPT TRV3E/TRV13E/TRV23E) |
| C365 | 1-164-227-11 | CERAMIC CHIP 0.022uF 10% 25V | (EXCEPT TRV3E/TRV13E/TRV23E) |
| C366 | 1-164-227-11 | CERAMIC CHIP 0.022uF 10% 25V | (EXCEPT TRV3E/TRV13E/TRV23E) |
| C367 | 1-164-227-11 | CERAMIC CHIP 0.022uF 10% 25V | (EXCEPT TRV3E/TRV13E/TRV23E) |
| C368 | 1-164-245-11 | CERAMIC CHIP 0.015uF 10% 25V | (EXCEPT TRV3E/TRV13E/TRV23E) |
| C369 | 1-162-962-11 | CERAMIC CHIP 470PF 10% 50V | (EXCEPT TRV3E/TRV13E/TRV23E) |
| C370 | 1-162-962-11 | CERAMIC CHIP 470PF 10% 50V | (EXCEPT TRV3E/TRV13E/TRV23E) |
| C371 | 1-164-346-11 | CERAMIC CHIP 1uF 16V | (EXCEPT TRV3E/TRV13E/TRV23E) |
| C372 | 1-164-346-11 | CERAMIC CHIP 1uF 16V | (EXCEPT TRV3E/TRV13E/TRV23E) |
| C373 | 1-164-156-11 | CERAMIC CHIP 0.1uF 25V | (EXCEPT TRV3E/TRV13E/TRV23E) |
| C375 | 1-164-346-11 | CERAMIC CHIP 1uF 16V | (EXCEPT TRV3E/TRV13E/TRV23E) |
| C376 | 1-135-259-11 | TANTAL. CHIP 10uF 20% 6.3V | |
| C377 | 1-162-966-11 | CERAMIC CHIP 0.0022uF 50V | |
| C378 | 1-165-128-11 | CERAMIC CHIP 0.22uF 16V | (EXCEPT TRV3E/TRV13E/TRV23E) |
| | | < CONNECTOR > | |
| * CN301 | 1-695-320-21 | PIN, CONNECTOR (1.5MM)(SMD) 2P | |
| * CN302 | 1-695-320-21 | PIN, CONNECTOR (1.5MM)(SMD) 2P | (EXCEPT TRV3E/TRV13E/TRV23E) |
| CN303 | 1-779-334-11 | CONNECTOR, FFC/FPC 20P | |
| | | < DIODE > | |
| D301 | 8-719-061-86 | DIODE DCR2810 (TRV75/TRV75PK/TRV715) | |
| D321 | 8-719-420-14 | DIODE MA8082-TX | (EXCEPT TRV3E/TRV13E/TRV23E) |
| D302 | 8-749-060-65 | DIODE DCC3810 (EXCEPT TRV3E/TRV13E) | |
| D303 | 8-719-061-82 | DIODE TLSU1002(TPX1,SONY) | |
| D305 | 8-719-404-49 | DIODE MA111-TX (EXCEPT TRV3E/TRV13E) | |
| D309 | 8-719-067-44 | DIODE CL-310IRS-X-TU | (TRV23E/TRV45E/TRV55E/TRV65E/TRV69E) |
| D322 | 8-719-420-14 | DIODE MA8082-TX | |
| D323 | 8-719-404-49 | DIODE MA111-TX | (EXCEPT TRV3E/TRV13E/TRV23E) |
| | | < FUSE > | |
| ⚠F301 | 1-533-874-11 | FUSE, MICRO 200mA/24V | (EXCEPT TRV3E/TRV13E) |
| | | < IC > | |
| IC301 | 8-749-012-83 | IC RS-180-T (EXCEPT TRV3E/TRV13E) | |
| IC321 | 8-759-339-63 | IC NJM2118V-TE2 (TRV3E/TRV13E/TRV23E) | |
| IC322 | 8-759-248-31 | IC BA7780KV-E2 | (EXCEPT TRV3E/TRV13E/TRV23E) |
| | | < JACK > | |
| J301 | 1-568-027-11 | JACK, SMALL TYPE (MIC (PLUG IN POWER)) | (TRV3E/TRV13E/TRV23E) |
| J301 | 1-691-737-11 | JACK (SMALL TYPE) (MIC (PLUG IN POWER)) | (EXCEPT TRV3E/TRV13E/TRV23E) |

| | |
|---|---|
| The components identified by mark ⚠ or dotted line with mark ⚠ are critical for safety.<br>Replace only with part number specified. | Les composants identifiés par une marque ⚠ sont critiques pour la sécurité.<br>Ne les remplacer que par une piéce portant le numéro spécifié. |

| Ref. No. | Part No. | Description | Remark |
|---|---|---|---|
| | | < COIL > | |
| L301 | 1-216-295-91 | SHORT 0 | (TRV23E/TRV45E/TRV55E/TRV65E/TRV69E) |
| L301 | 1-414-754-11 | INDUCTOR 10uH | (TRV75/TRV75PK/TRV715) |
| | | < TRANSISTOR > | |
| Q301 | 8-729-420-24 | TRANSISTOR 2SB1218A-QRS-TX | (TRV75/TRV75PK/TRV715) |
| Q301 | 8-729-422-51 | TRANSISTOR UN5110-QRS-TX | (TRV23E/TRV45E/TRV55E/TRV65E/TRV69E) |
| Q302 | 8-729-122-63 | TRANSISTOR 2SA1226-T1E4 | (TRV75/TRV75PK/TRV715) |
| Q303 | 8-729-140-75 | TRANSISTOR 2SD999-T1-CLCK | (EXCEPT TRV3E/TRV13E) |
| Q304 | 8-729-402-42 | TRANSISTOR UN5213-TX | |
| Q305 | 8-729-402-42 | TRANSISTOR UN5213-TX | (TRV23E/TRV45E/TRV55E/TRV65E/TRV69E) |
| Q321 | 8-729-230-63 | TRANSISTOR 2SD1819A-QRS-TX | (TRV3E/TRV13E/TRV23E) |
| Q322 | 8-729-420-24 | TRANSISTOR 2SB1218A-QRS-TX | (TRV3E/TRV13E/TRV23E) |
| | | < RESISTOR > | |
| R301 | 1-216-823-11 | METAL CHIP 1.5K 5% 1/16W | (TRV75/TRV75PK/TRV715) |
| R302 | 1-216-810-11 | METAL CHIP 120 5% 1/16W | (TRV75/TRV75PK/TRV715) |
| R304 | 1-216-309-00 | METAL CHIP 5.6 5% 1/10W | (TRV23E/TRV45E/TRV55E/TRV65E/TRV69E) |
| R304 | 1-216-311-00 | METAL CHIP 6.8 5% 1/10W | (TRV75/TRV75PK/TRV715) |
| R305 | 1-216-302-00 | METAL CHIP 2.7 5% 1/10W | (EXCEPT TRV3E/TRV13E/TRV23E) |
| R306 | 1-216-864-11 | METAL CHIP 0 5% 1/16W | |
| R310 | 1-216-824-11 | METAL CHIP 1.8K 5% 1/16W | |
| R311 | 1-216-805-11 | METAL CHIP 47 5% 1/16W | (EXCEPT TRV3E/TRV13E/TRV23E) |
| R312 | 1-216-864-11 | METAL CHIP 0 5% 1/16W | (TRV75/TRV75PK/TRV715) |
| R314 | 1-216-815-11 | METAL CHIP 330 5% 1/16W | (TRV23E/TRV45E/TRV55E/TRV65E/TRV69E) |
| R315 | 1-216-864-11 | METAL CHIP 0 5% 1/16W | (TRV75/TRV75PK/TRV715) |
| R321 | 1-216-864-11 | METAL CHIP 0 5% 1/16W | (EXCEPT TRV3E/TRV13E/TRV23E) |
| R322 | 1-216-864-11 | METAL CHIP 0 5% 1/16W | |
| R323 | 1-216-864-11 | METAL CHIP 0 5% 1/16W | |
| R324 | 1-216-864-11 | METAL CHIP 0 5% 1/16W | (EXCEPT TRV3E/TRV13E/TRV23E) |
| R325 | 1-216-824-11 | METAL CHIP 1.8K 5% 1/16W | (TRV3E/TRV13E/TRV23E) |
| R326 | 1-216-817-11 | METAL CHIP 470 5% 1/16W | (TRV3E/TRV13E/TRV23E) |
| R327 | 1-216-841-11 | METAL CHIP 47K 5% 1/16W | (TRV3E/TRV13E/TRV23E) |
| R328 | 1-216-841-11 | METAL CHIP 47K 5% 1/16W | (TRV3E/TRV13E/TRV23E) |
| R329 | 1-216-829-11 | METAL CHIP 4.7K 5% 1/16W | (TRV3E/TRV13E/TRV23E) |
| R330 | 1-216-830-11 | METAL CHIP 5.6K 5% 1/16W | (TRV3E/TRV13E/TRV23E) |
| R331 | 1-216-831-11 | METAL CHIP 6.8K 5% 1/16W | (TRV3E/TRV13E/TRV23E) |
| R332 | 1-216-803-11 | METAL CHIP 33 5% 1/16W | (TRV3E/TRV13E/TRV23E) |
| R333 | 1-216-838-11 | METAL CHIP 27K 5% 1/16W | (TRV3E/TRV13E/TRV23E) |
| R334 | 1-216-838-11 | METAL CHIP 27K 5% 1/16W | (TRV3E/TRV13E/TRV23E) |
| R335 | 1-216-839-11 | METAL CHIP 33K 5% 1/16W | (EXCEPT TRV3E/TRV13E/TRV23E) |
| R336 | 1-216-836-11 | METAL CHIP 18K 5% 1/16W | (EXCEPT TRV3E/TRV13E/TRV23E) |
| R337 | 1-216-835-11 | METAL CHIP 15K 5% 1/16W | (EXCEPT TRV3E/TRV13E/TRV23E) |
| R338 | 1-216-835-11 | METAL CHIP 15K 5% 1/16W | (EXCEPT TRV3E/TRV13E/TRV23E) |
| R339 | 1-216-831-11 | METAL CHIP 6.8K 5% 1/16W | (EXCEPT TRV3E/TRV13E/TRV23E) |
| R340 | 1-216-825-11 | METAL CHIP 2.2K 5% 1/16W | (EXCEPT TRV3E/TRV13E/TRV23E) |
| R341 | 1-216-821-11 | METAL CHIP 1K 5% 1/16W | (EXCEPT TRV3E/TRV13E/TRV23E) |
| R342 | 1-216-831-11 | METAL CHIP 6.8K 5% 1/16W | (EXCEPT TRV3E/TRV13E/TRV23E) |
| R343 | 1-216-829-11 | METAL CHIP 4.7K 5% 1/16W | (EXCEPT TRV3E/TRV13E/TRV23E) |
| R344 | 1-216-833-11 | METAL CHIP 10K 5% 1/16W | (EXCEPT TRV3E/TRV13E/TRV23E) |
| R345 | 1-216-821-11 | METAL CHIP 1K 5% 1/16W | (EXCEPT TRV3E/TRV13E/TRV23E) |
| R346 | 1-216-825-11 | METAL CHIP 2.2K 5% 1/16W | (EXCEPT TRV3E/TRV13E/TRV23E) |
| R347 | 1-216-831-11 | METAL CHIP 6.8K 5% 1/16W | (EXCEPT TRV3E/TRV13E/TRV23E) |
| R348 | 1-216-831-11 | METAL CHIP 6.8K 5% 1/16W | (EXCEPT TRV3E/TRV13E/TRV23E) |
| R349 | 1-216-831-11 | METAL CHIP 6.8K 5% 1/16W | (EXCEPT TRV3E/TRV13E/TRV23E) |
| R350 | 1-216-864-11 | METAL CHIP 0 5% 1/16W | (EXCEPT TRV3E/TRV13E/TRV23E) |
| R351 | 1-216-838-11 | METAL CHIP 27K 5% 1/16W | (TRV45E/TRV55E/TRV75/TRV75PK/TRV715) |
| R351 | 1-216-839-11 | METAL CHIP 33K 5% 1/16W | (TRV65E/TRV69E) |
| R352 | 1-216-839-11 | METAL CHIP 33K 5% 1/16W | (EXCEPT TRV3E/TRV13E/TRV23E) |
| R353 | 1-216-839-11 | METAL CHIP 33K 5% 1/16W | (EXCEPT TRV3E/TRV13E/TRV23E) |
| R354 | 1-216-829-11 | METAL CHIP 4.7K 5% 1/16W | (EXCEPT TRV3E/TRV13E/TRV23E) |
| R355 | 1-216-833-11 | METAL CHIP 10K 5% 1/16W | (EXCEPT TRV3E/TRV13E/TRV23E) |
| R356 | 1-216-864-11 | METAL CHIP 0 5% 1/16W | (EXCEPT TRV3E/TRV13E/TRV23E) |
| R357 | 1-216-831-11 | METAL CHIP 6.8K 5% 1/16W | (EXCEPT TRV3E/TRV13E/TRV23E) |
| R358 | 1-216-838-11 | METAL CHIP 27K 5% 1/16W | (TRV45E/TRV55E/TRV75/TRV75PK/TRV715) |
| R358 | 1-216-839-11 | METAL CHIP 33K 5% 1/16W | (TRV65E/TRV69E) |

| Ref. No. | Part No. | Description | | | Remark |
|---|---|---|---|---|---|
| R359 | 1-216-835-11 | METAL CHIP | 15K | 5% | 1/16W (EXCEPT TRV3E/TRV13E/TRV23E) |
| R360 | 1-216-835-11 | METAL CHIP | 15K | 5% | 1/16W (EXCEPT TRV3E/TRV13E/TRV23E) |
| R361 | 1-216-835-11 | METAL CHIP | 15K | 5% | 1/16W (EXCEPT TRV3E/TRV13E/TRV23E) |
| R362 | 1-216-835-11 | METAL CHIP | 15K | 5% | 1/16W (EXCEPT TRV3E/TRV13E/TRV23E) |
| R363 | 1-216-830-11 | METAL CHIP | 5.6K | 5% | 1/16W (EXCEPT TRV3E/TRV13E/TRV23E) |
| R364 | 1-216-839-11 | METAL CHIP | 33K | 5% | 1/16W (EXCEPT TRV3E/TRV13E/TRV23E) |
| R365 | 1-216-834-11 | METAL CHIP | 12K | 5% | 1/16W (EXCEPT TRV3E/TRV13E/TRV23E) |
| R366 | 1-216-839-11 | METAL CHIP | 33K | 5% | 1/16W (EXCEPT TRV3E/TRV13E/TRV23E) |
| R367 | 1-216-818-11 | METAL CHIP | 560 | 5% | 1/16W (EXCEPT TRV3E/TRV13E/TRV23E) |
| R368 | 1-216-832-11 | METAL CHIP | 8.2K | 5% | 1/16W (EXCEPT TRV3E/TRV13E/TRV23E) |
| | | < SWITCH > | | | |
| S302 | 1-771-040-21 | SWITCH, PUSH (POWER (VTR/PLAYER)) | | | |
| S303 | 1-771-039-11 | SWITCH, PUSH (POWER (CAMERA)) | | | |

| | | | | | |
|---|---|---|---|---|---|
| | A-7073-452-A | PD-92(SP6) BOARD, COMPLETE (TRV23E) | | | |
| | | ********** | | | |
| | A-7073-460-A | PD-92(CP6) BOARD, COMPLETE (TRV3E/TRV13E) | | | |
| | | ********** | | | |
| | A-7073-502-A | PD-92(SP8) BOARD, COMPLETE (TRV65E/TRV69E) | | | |
| | | ********** (Ref.No.10000 series) | | | |
| | | < CAPACITOR > | | | |
| C5501 | 1-107-826-11 | CERAMIC CHIP | 0.1uF | 10% | 16V |
| C5502 | 1-107-826-11 | CERAMIC CHIP | 0.1uF | 10% | 16V |
| C5503 | 1-162-970-11 | CERAMIC CHIP | 0.01uF | 10% | 25V |
| C5504 | 1-162-970-11 | CERAMIC CHIP | 0.01uF | 10% | 25V |
| C5505 | 1-162-970-11 | CERAMIC CHIP | 0.01uF | 10% | 25V |
| C5506 | 1-164-004-11 | CERAMIC CHIP | 0.1uF | 10% | 25V |
| C5507 | 1-104-851-11 | TANTAL. CHIP | 10uF | 20% | 10V |
| C5508 | 1-107-826-11 | CERAMIC CHIP | 0.1uF | 10% | 16V |
| C5509 | 1-135-180-21 | TANTALUM CHIP | 3.3uF | 20% | 6.3V |
| C5511 | 1-109-982-11 | CERAMIC CHIP | 1uF | 10% | 10V |
| C5512 | 1-104-851-11 | TANTAL. CHIP | 10uF | 20% | 10V |
| C5513 | 1-107-826-11 | CERAMIC CHIP | 0.1uF | 10% | 16V |
| C5514 | 1-110-501-11 | CERAMIC CHIP | 0.33uF | 10% | 16V (TRV3E/TRV13E) |
| C5514 | 1-115-339-11 | CERAMIC CHIP | 0.1uF | 10% | 50V (TRV23E/TRV65E/TRV69E) |
| C5515 | 1-110-501-11 | CERAMIC CHIP | 0.33uF | 10% | 16V (TRV3E/TRV13E) |
| C5515 | 1-115-339-11 | CERAMIC CHIP | 0.1uF | 10% | 50V (TRV23E/TRV65E/TRV69E) |

| Ref. No. | Part No. | Description | | | Remark |
|---|---|---|---|---|---|
| C5516 | 1-110-501-11 | CERAMIC CHIP | 0.33uF | 10% | 16V (TRV3E/TRV13E) |
| C5516 | 1-115-339-11 | CERAMIC CHIP | 0.1uF | 10% | 50V (TRV23E/TRV65E/TRV69E) |
| C5517 | 1-107-826-11 | CERAMIC CHIP | 0.1uF | 10% | 16V |
| C5518 | 1-109-982-11 | CERAMIC CHIP | 1uF | 10% | 10V |
| C5519 | 1-104-851-11 | TANTAL. CHIP | 10uF | 20% | 10V |
| C5520 | 1-107-826-11 | CERAMIC CHIP | 0.1uF | 10% | 16V |
| C5601 | 1-104-851-11 | TANTAL. CHIP | 10uF | 20% | 10V (TRV3E/TRV13E) |
| C5602 | 1-107-687-11 | TANTAL. CHIP | 3.3uF | 20% | 20V |
| C5603 | 1-110-501-11 | CERAMIC CHIP | 0.33uF | 10% | 16V (TRV3E/TRV13E) |
| C5603 | 1-164-004-11 | CERAMIC CHIP | 0.1uF | 10% | 25V (TRV23E/TRV65E/TRV69E) |
| C5604 | 1-107-826-11 | CERAMIC CHIP | 0.1uF | 10% | 16V |
| C5605 | 1-107-826-11 | CERAMIC CHIP | 0.1uF | 10% | 16V |
| C5607 | 1-164-004-11 | CERAMIC CHIP | 0.1uF | 10% | 25V |
| C5608 | 1-164-357-11 | CERAMIC CHIP | 1000PF | 5% | 50V |
| C5610 | 1-162-926-11 | CERAMIC CHIP | 82PF | 5% | 50V |
| C5612 | 1-162-926-11 | CERAMIC CHIP | 82PF | 5% | 50V |
| C5616 | 1-107-682-11 | CERAMIC CHIP | 1uF | 10% | 16V |
| C5618 | 1-113-994-11 | TANTAL. CHIP | 6.8uF | 20% | 16V (TRV23E/TRV65E/TRV69E) |
| C5619 | 1-162-970-11 | CERAMIC CHIP | 0.01uF | 10% | 25V (TRV23E/TRV65E/TRV69E) |
| C5620 | 1-107-826-11 | CERAMIC CHIP | 0.1uF | 10% | 16V |
| C5621 | 1-135-177-21 | TANTALUM CHIP | 1uF | 20% | 20V |
| C5622 | 1-107-682-11 | CERAMIC CHIP | 1uF | 10% | 16V |
| C5623 | 1-107-826-11 | CERAMIC CHIP | 0.1uF | 10% | 16V (TRV3E/TRV13E) |
| C5624 | 1-107-688-11 | TANTAL. CHIP | 1.5uF | 20% | 10V |
| C5625 | 1-107-688-11 | TANTAL. CHIP | 1.5uF | 20% | 10V |
| C5633 | 1-162-967-11 | CERAMIC CHIP | 0.0033uF | 10% | 50V |
| C5701 | 1-104-911-11 | TANTAL. CHIP | 33uF | 20% | 10V |
| C5702 | 1-164-346-11 | CERAMIC CHIP | 1uF | | 16V |
| C5703 | 1-164-664-11 | CERAMIC CHIP | 0.033uF | 10% | 50V |
| C5704 | 1-164-004-11 | CERAMIC CHIP | 0.1uF | 10% | 25V |
| C5705 | 1-113-521-11 | CERAMIC CHIP | 12PF | 10% | 3KV |
| C5706 | 1-162-970-11 | CERAMIC CHIP | 0.01uF | 10% | 25V |
| C5801 | 1-107-826-11 | CERAMIC CHIP | 0.1uF | 10% | 16V |
| | | < CONNECTOR > | | | |
| * CN5501 | 1-573-984-11 | CONNECTOR, BOARD TO BOARD 10P | | | |
| CN5601 | 1-691-362-11 | CONNECTOR, FFC/FPC (ZIF) 24P | | | |
| CN5701 | 1-764-709-11 | CONNECTOR, FFC/FPC (LIF) 10P | | | |
| CN5801 | 1-750-360-21 | CONNECTOR, FFC/FPC (ZIF) 24P | | | |
| CN5802 | 1-778-509-21 | PIN, CONNECTOR (PC BOARD) 11P | | | |
| CN5803 | 1-778-508-21 | PIN, CONNECTOR (PC BOARD) 6P | | | |
| CN5804 | 1-779-064-11 | PIN, CONNECTOR (PC BOARD) 12P | | | |
| CN5805 | 1-766-336-21 | CONNECTOR, FFC/FPC 6P | | | |
| | | < DIODE > | | | |
| D5604 | 8-719-976-96 | DIODE MA8047-H-TX | | | |
| D5605 | 8-713-102-80 | DIODE 1T369-01-T8A | | | |
| D5703 | 8-719-058-86 | DIODE PG1101H-TR | | | |
| D5704 | 8-719-404-49 | DIODE MA111-TX | | | |

| Ref. No. | Part No. | Description | Remark |
|---|---|---|---|
| | | < IC > | |
| IC5501 | 8-759-364-05 | IC M62376GP-65AD | |
| IC5502 | 8-759-486-77 | IC IR3Y37M4 | |
| IC5601 | 8-759-495-00 | IC LZ9GH184 (TRV23E/TRV65E/TRV69E) | |
| IC5601 | 8-759-530-20 | IC CM7017L3-T4 (TRV3E/TRV13E) | |
| IC5602 | 8-759-327-01 | IC NJM062V(TE2) | |
| IC5701 | 8-759-075-70 | IC TA75S393F-TE85R | |
| IC5801 | 8-759-494-53 | IC BU9729K-E2 | |
| | | < COIL > | |
| L5501 | 1-414-754-11 | INDUCTOR 10uH | |
| L5502 | 1-414-754-11 | INDUCTOR 10uH | |
| L5503 | 1-414-754-11 | INDUCTOR 10uH | |
| L5601 | 1-414-754-11 | INDUCTOR 10uH (TRV3E/TRV13E) | |
| L5603 | 1-414-754-11 | INDUCTOR 10uH | |
| L5604 | 1-414-754-11 | INDUCTOR 10uH | |
| L5605 | 1-412-953-11 | INDUCTOR 15uH (TRV65E/TRV69E) | |
| L5605 | 1-412-956-21 | INDUCTOR 27uH (TRV23E) | |
| L5605 | 1-412-957-11 | INDUCTOR 33uH (TRV3E/TRV13E) | |
| L5701 | 1-409-536-41 | INDUCTOR 0uH | |
| | | < TRANSISTOR > | |
| Q5501 | 8-729-420-24 | TRANSISTOR 2SB1218A-QRS-TX | |
| Q5601 | 8-729-402-42 | TRANSISTOR UN5213-TX | |
| Q5602 | 8-729-402-42 | TRANSISTOR UN5213-TX | |
| Q5605 | 8-729-230-63 | TRANSISTOR 2SD1819A-QRS-TX | |
| Q5606 | 8-729-420-24 | TRANSISTOR 2SB1218A-QRS-TX | |
| Q5607 | 8-729-230-63 | TRANSISTOR 2SD1819A-QRS-TX | |
| Q5608 | 8-729-420-24 | TRANSISTOR 2SB1218A-QRS-TX | |
| Q5701 | 8-729-039-43 | TRANSISTOR FP216-TL | |
| Q5702 | 8-729-015-74 | TRANSISTOR UN5111-TX | |
| | | < RESISTOR > | |
| R5501 | 1-216-840-11 | METAL CHIP 39K 5% 1/16W | |
| R5505 | 1-216-841-11 | METAL CHIP 47K 5% 1/16W | |
| R5512 | 1-216-837-11 | METAL CHIP 22K 5% 1/16W | |
| R5513 | 1-216-834-11 | METAL CHIP 12K 5% 1/16W | |
| R5516 | 1-216-837-11 | METAL CHIP 22K 5% 1/16W | |
| R5517 | 1-216-835-11 | METAL CHIP 15K 5% 1/16W | |
| R5518 | 1-216-839-11 | METAL CHIP 33K 5% 1/16W | |
| R5520 | 1-216-852-11 | METAL CHIP 390K 5% 1/16W | |
| R5521 | 1-216-834-11 | METAL CHIP 12K 5% 1/16W | |
| R5522 | 1-216-840-11 | METAL CHIP 39K 5% 1/16W | (TRV23E/TRV65E/TRV69E) |
| R5522 | 1-216-843-11 | METAL CHIP 68K 5% 1/16W | (TRV3E/TRV13E) |
| R5528 | 1-218-895-11 | RES,CHIP 100K 0.50% 1/16W | |
| R5531 | 1-216-821-11 | METAL CHIP 1K 5% 1/16W | |
| R5532 | 1-216-841-11 | METAL CHIP 47K 5% 1/16W | |
| R5533 | 1-216-864-11 | METAL CHIP 0 5% 1/16W | |
| R5537 | 1-216-828-11 | METAL CHIP 3.9K 5% 1/16W | (TRV3E/TRV13E) |
| R5537 | 1-216-831-11 | METAL CHIP 6.8K 5% 1/16W | (TRV65E/TRV69E) |
| R5537 | 1-216-832-11 | METAL CHIP 8.2K 5% 1/16W | (TRV23E) |
| R5541 | 1-216-825-11 | METAL CHIP 2.2K 5% 1/16W | |
| R5542 | 1-216-824-11 | METAL CHIP 1.8K 5% 1/16W | |
| R5544 | 1-216-821-11 | METAL CHIP 1K 5% 1/16W | |
| R5602 | 1-216-864-11 | METAL CHIP 0 5% 1/16W | (TRV3E/TRV13E) |
| R5603 | 1-216-864-11 | METAL CHIP 0 5% 1/16W | |
| R5604 | 1-216-864-11 | METAL CHIP 0 5% 1/16W | |
| R5605 | 1-216-864-11 | METAL CHIP 0 5% 1/16W | (TRV3E/TRV13E) |
| R5607 | 1-216-864-11 | METAL CHIP 0 5% 1/16W | (TRV23E/TRV65E/TRV69E) |
| R5608 | 1-216-864-11 | METAL CHIP 0 5% 1/16W | (TRV23E/TRV65E/TRV69E) |
| R5610 | 1-216-842-11 | METAL CHIP 56K 5% 1/16W | (TRV3E/TRV13E) |
| R5610 | 1-216-845-11 | METAL CHIP 100K 5% 1/16W | (TRV23E/TRV65E/TRV69E) |
| R5612 | 1-216-833-11 | METAL CHIP 10K 5% 1/16W | |
| R5613 | 1-216-841-11 | METAL CHIP 47K 5% 1/16W | |
| R5615 | 1-216-849-11 | METAL CHIP 220K 5% 1/16W | (TRV3E/TRV13E/TRV23E) |
| R5615 | 1-216-851-11 | METAL CHIP 330K 5% 1/16W | (TRV65E/TRV69E) |
| R5617 | 1-216-833-11 | METAL CHIP 10K 5% 1/16W | |
| R5621 | 1-216-857-11 | METAL CHIP 1M 5% 1/16W | (TRV23E/TRV65E/TRV69E) |
| R5622 | 1-216-864-11 | METAL CHIP 0 5% 1/16W | |
| R5625 | 1-218-891-11 | RES,CHIP 68K 0.50% 1/16W | (TRV3E/TRV13E) |
| R5625 | 1-218-895-11 | RES,CHIP 100K 0.50% 1/16W | (TRV23E/TRV65E/TRV69E) |
| R5627 | 1-218-895-11 | RES,CHIP 100K 0.50% 1/16W | (TRV3E/TRV13E) |
| R5627 | 1-218-901-11 | RES,CHIP 180K 0.50% 1/16W | (TRV23E/TRV65E/TRV69E) |
| R5628 | 1-216-864-11 | METAL CHIP 0 5% 1/16W | |
| R5629 | 1-216-833-11 | METAL CHIP 10K 5% 1/16W | |
| R5630 | 1-216-821-11 | METAL CHIP 1K 5% 1/16W | |
| R5632 | 1-216-864-11 | METAL CHIP 0 5% 1/16W | (TRV23E) |
| R5636 | 1-216-864-11 | METAL CHIP 0 5% 1/16W | |
| R5637 | 1-216-864-11 | METAL CHIP 0 5% 1/16W | (TRV23E/TRV65E/TRV69E) |
| R5640 | 1-216-845-11 | METAL CHIP 100K 5% 1/16W | |
| R5641 | 1-216-839-11 | METAL CHIP 33K 5% 1/16W | |
| R5643 | 1-216-845-11 | METAL CHIP 100K 5% 1/16W | |
| R5644 | 1-216-839-11 | METAL CHIP 33K 5% 1/16W | |
| R5647 | 1-216-864-11 | METAL CHIP 0 5% 1/16W | (TRV3E/TRV13E) |
| R5648 | 1-216-864-11 | METAL CHIP 0 5% 1/16W | (TRV3E/TRV13E) |
| R5651 | 1-218-883-11 | RES,CHIP 33K 0.50% 1/16W | (TRV23E/TRV65E/TRV69E) |
| R5652 | 1-216-864-11 | METAL CHIP 0 5% 1/16W | (TRV3E/TRV13E) |
| R5652 | 1-218-879-11 | RES,CHIP 22K 0.50% 1/16W | (TRV23E/TRV65E/TRV69E) |
| R5653 | 1-218-883-11 | RES,CHIP 33K 0.50% 1/16W | (TRV23E/TRV65E/TRV69E) |
| R5654 | 1-218-879-11 | RES,CHIP 22K 0.50% 1/16W | (TRV23E/TRV65E/TRV69E) |
| R5657 | 1-216-864-11 | METAL CHIP 0 5% 1/16W | (TRV23E/TRV65E/TRV69E) |
| R5658 | 1-216-864-11 | METAL CHIP 0 5% 1/16W | (TRV23E/TRV65E/TRV69E) |

| Ref. No. | Part No. | Description | | | Remark |
|---|---|---|---|---|---|
| R5659 | 1-216-864-11 | METAL CHIP | 0 | 5% | 1/16W (TRV23E/TRV65E/TRV69E) |
| R5660 | 1-216-864-11 | METAL CHIP | 0 | 5% | 1/16W (TRV23E/TRV65E/TRV69E) |
| R5661 | 1-216-864-11 | METAL CHIP | 0 | 5% | 1/16W (TRV23E/TRV65E/TRV69E) |
| R5663 | 1-216-864-11 | METAL CHIP | 0 | 5% | 1/16W (TRV3E/TRV13E) |
| R5664 | 1-216-864-11 | METAL CHIP | 0 | 5% | 1/16W (TRV3E/TRV13E) |
| R5665 | 1-216-864-11 | METAL CHIP | 0 | 5% | 1/16W (TRV3E/TRV13E) |
| R5666 | 1-216-864-11 | METAL CHIP | 0 | 5% | 1/16W (TRV3E/TRV13E) |
| R5667 | 1-216-864-11 | METAL CHIP | 0 | 5% | 1/16W (TRV3E/TRV13E) |
| R5668 | 1-216-864-11 | METAL CHIP | 0 | 5% | 1/16W (TRV3E/TRV13E) |
| R5669 | 1-216-864-11 | METAL CHIP | 0 | 5% | 1/16W (TRV23E/TRV65E/TRV69E) |
| R5670 | 1-216-864-11 | METAL CHIP | 0 | 5% | 1/16W (TRV23E/TRV65E/TRV69E) |
| R5671 | 1-216-864-11 | METAL CHIP | 0 | 5% | 1/16W (TRV23E/TRV65E/TRV69E) |
| R5672 | 1-216-849-11 | METAL CHIP | 220K | 5% | 1/16W (TRV3E/TRV13E) |
| R5673 | 1-216-864-11 | METAL CHIP | 0 | 5% | 1/16W (TRV3E/TRV13E) |
| R5674 | 1-216-864-11 | METAL CHIP | 0 | 5% | 1/16W (TRV23E/TRV65E/TRV69E) |
| R5676 | 1-216-864-11 | METAL CHIP | 0 | 5% | 1/16W (TRV23E/TRV65E/TRV69E) |
| R5678 | 1-216-864-11 | METAL CHIP | 0 | 5% | 1/16W (TRV3E/TRV13E) |
| R5679 | 1-216-805-11 | METAL CHIP | 47 | 5% | 1/16W (TRV23E/TRV65E/TRV69E) |
| R5680 | 1-216-805-11 | METAL CHIP | 47 | 5% | 1/16W (TRV23E/TRV65E/TRV69E) |
| R5681 | 1-216-805-11 | METAL CHIP | 47 | 5% | 1/16W (TRV23E/TRV65E/TRV69E) |
| R5682 | 1-216-805-11 | METAL CHIP | 47 | 5% | 1/16W (TRV3E/TRV13E) |
| R5683 | 1-216-805-11 | METAL CHIP | 47 | 5% | 1/16W (TRV3E/TRV13E) |
| R5684 | 1-216-805-11 | METAL CHIP | 47 | 5% | 1/16W (TRV3E/TRV13E) |
| R5685 | 1-216-845-11 | METAL CHIP | 100K | 5% | 1/16W |
| R5686 | 1-216-845-11 | METAL CHIP | 100K | 5% | 1/16W |
| R5688 | 1-216-864-11 | METAL CHIP | 0 | 5% | 1/16W |
| R5692 | 1-216-851-11 | METAL CHIP | 330K | 5% | 1/16W (TRV3E/TRV13E/TRV23E) |
| R5692 | 1-216-852-11 | METAL CHIP | 390K | 5% | 1/16W (TRV65E/TRV69E) |
| R5694 | 1-216-839-11 | METAL CHIP | 33K | 5% | 1/16W |
| R5695 | 1-216-833-11 | METAL CHIP | 10K | 5% | 1/16W |
| R5696 | 1-216-864-11 | METAL CHIP | 0 | 5% | 1/16W (TRV23E/TRV65E/TRV69E) |
| R5697 | 1-216-864-11 | METAL CHIP | 0 | 5% | 1/16W (TRV3E/TRV13E) |
| R5698 | 1-216-864-11 | METAL CHIP | 0 | 5% | 1/16W (TRV3E/TRV13E) |

| Ref. No. | Part No. | Description | | | Remark |
|---|---|---|---|---|---|
| R5703 | 1-216-055-00 | METAL CHIP | 1.8K | 5% | 1/10W |
| R5704 | 1-216-055-00 | METAL CHIP | 1.8K | 5% | 1/10W |
| R5705 | 1-216-845-11 | METAL CHIP | 100K | 5% | 1/16W |
| R5706 | 1-216-831-11 | METAL CHIP | 6.8K | 5% | 1/16W |
| R5707 | 1-216-837-11 | METAL CHIP | 22K | 5% | 1/16W |
| R5708 | 1-216-810-11 | METAL CHIP | 120 | 5% | 1/16W |
| R5709 | 1-216-817-11 | METAL CHIP | 470 | 5% | 1/16W |
| R5710 | 1-216-864-11 | METAL CHIP | 0 | 5% | 1/16W |
| R5801 | 1-216-823-11 | METAL CHIP | 1.5K | 5% | 1/16W |
| R5802 | 1-216-825-11 | METAL CHIP | 2.2K | 5% | 1/16W |
| R5803 | 1-216-828-11 | METAL CHIP | 3.9K | 5% | 1/16W |
| R5804 | 1-216-832-11 | METAL CHIP | 8.2K | 5% | 1/16W |
| R5805 | 1-216-838-11 | METAL CHIP | 27K | 5% | 1/16W |
| R5806 | 1-216-822-11 | METAL CHIP | 1.2K | 5% | 1/16W |
| R5807 | 1-216-809-11 | METAL CHIP | 100 | 5% | 1/16W |
| R5808 | 1-216-809-11 | METAL CHIP | 100 | 5% | 1/16W |
| R5811 | 1-216-864-11 | METAL CHIP | 0 | 5% | 1/16W |
| R5812 | 1-216-855-11 | METAL CHIP | 680K | 5% | 1/16W |
| | | < SWITCH > | | | |
| S5801 | 1-692-088-41 | SWITCH, TACTILE (LCD BRIGHT +) | | | |
| S5802 | 1-692-088-41 | SWITCH, TACTILE (LCD BRIGHT -) | | | |
| S5803 | 1-692-088-41 | SWITCH, TACTILE (VOLUME +) | | | |
| S5804 | 1-692-088-41 | SWITCH, TACTILE (VOLUME -) | | | |
| | | < TRANSFORMER > | | | |
| ⚠T5701 | 1-429-547-31 | TRANSFORMER, INVERTER | | | |

| | | | | | |
|---|---|---|---|---|---|
| | A-7073-457-A | PD-93(SN3) BOARD, COMPLETE (TRV75/TRV75PK/TRV715) | | | |
| | | ********** | | | |
| | A-7073-480-A | PD-93(SP3.5) BOARD, COMPLETE (TRV45E/TRV55E) | | | |
| | | ********** (Ref. No. 10000 series) | | | |
| | | < CAPACITOR > | | | |
| C4501 | 1-107-826-11 | CERAMIC CHIP | 0.1uF | 10% | 16V |
| C4502 | 1-107-826-11 | CERAMIC CHIP | 0.1uF | 10% | 16V |
| C4503 | 1-162-970-11 | CERAMIC CHIP | 0.01uF | 10% | 25V |
| C4504 | 1-162-970-11 | CERAMIC CHIP | 0.01uF | 10% | 25V |
| C4505 | 1-162-970-11 | CERAMIC CHIP | 0.01uF | 10% | 25V |
| C4506 | 1-164-004-11 | CERAMIC CHIP | 0.1uF | 10% | 25V |
| C4507 | 1-104-851-11 | TANTAL. CHIP | 10uF | 20% | 10V |
| C4508 | 1-107-826-11 | CERAMIC CHIP | 0.1uF | 10% | 16V |
| C4509 | 1-135-180-21 | TANTALUM CHIP | 3.3uF | 20% | 6.3V |
| C4511 | 1-107-682-11 | CERAMIC CHIP | 1uF | 10% | 16V |
| C4512 | 1-104-851-11 | TANTAL. CHIP | 10uF | 20% | 10V |
| C4513 | 1-107-826-11 | CERAMIC CHIP | 0.1uF | 10% | 16V |
| C4514 | 1-164-004-11 | CERAMIC CHIP | 0.1uF | 10% | 25V |
| C4515 | 1-164-004-11 | CERAMIC CHIP | 0.1uF | 10% | 25V |
| C4516 | 1-164-004-11 | CERAMIC CHIP | 0.1uF | 10% | 25V |
| C4517 | 1-107-826-11 | CERAMIC CHIP | 0.1uF | 10% | 16V |
| C4518 | 1-109-982-11 | CERAMIC CHIP | 1uF | 10% | 10V |
| C4519 | 1-104-851-11 | TANTAL. CHIP | 10uF | 20% | 10V |
| C4520 | 1-107-826-11 | CERAMIC CHIP | 0.1uF | 10% | 16V |

The components identified by mark ⚠ or dotted line with mark ⚠ are critical for safety.
Replace only with part number specified.

Les composants identifiés par une marque ⚠ sont critiques pour la sécurité.
Ne les remplacer que par une piéce portant le numéro spécifié.

| Ref. No. | Part No. | Description | | | Remark |
|---|---|---|---|---|---|
| C4602 | 1-107-687-11 | TANTAL. CHIP | 3.3uF | 20% | 20V |
| C4603 | 1-164-004-11 | CERAMIC CHIP | 0.1uF | 10% | 25V |
| C4604 | 1-107-826-11 | CERAMIC CHIP | 0.1uF | 10% | 16V |
| C4605 | 1-107-826-11 | CERAMIC CHIP | 0.1uF | 10% | 16V |
| C4607 | 1-164-004-11 | CERAMIC CHIP | 0.1uF | 10% | 25V |
| C4608 | 1-164-357-11 | CERAMIC CHIP | 1000PF | 5% | 50V |
| C4610 | 1-162-926-11 | CERAMIC CHIP | 82PF | 5% | 50V |
| C4612 | 1-162-926-11 | CERAMIC CHIP | 82PF | 5% | 50V |
| C4616 | 1-107-682-11 | CERAMIC CHIP | 1uF | 10% | 16V |
| C4618 | 1-113-994-11 | TANTAL. CHIP | 6.8uF | 20% | 16V |
| C4619 | 1-162-970-11 | CERAMIC CHIP | 0.01uF | 10% | 25V |
| C4620 | 1-162-970-11 | CERAMIC CHIP | 0.01uF | 10% | 25V |
| C4621 | 1-135-177-21 | TANTALUM CHIP | 1uF | 20% | 20V |
| C4622 | 1-107-682-11 | CERAMIC CHIP | 1uF | 10% | 16V |
| C4624 | 1-107-688-11 | TANTAL. CHIP | 1.5uF | 20% | 10V |
| C4625 | 1-107-688-11 | TANTAL. CHIP | 1.5uF | 20% | 10V |
| C4633 | 1-162-967-11 | CERAMIC CHIP | 0.0033uF | 10% | 50V |
| C4701 | 1-104-911-11 | TANTAL. CHIP | 33uF | 20% | 10V |
| C4702 | 1-164-346-11 | CERAMIC CHIP | 1uF | | 16V |
| C4703 | 1-164-664-11 | CERAMIC CHIP | 0.033uF | 10% | 50V |
| C4704 | 1-164-004-11 | CERAMIC CHIP | 0.1uF | 10% | 25V |
| ⚠C4705 | 1-113-520-11 | CERAMIC CHIP | 10PF | 10% | 3KV (TRV75/TRV75PK/TRV715) |
| ⚠C4705 | 1-113-521-11 | CERAMIC CHIP | 12PF | 10% | 3KV (TRV45E/TRV55E) |
| C4706 | 1-162-970-11 | CERAMIC CHIP | 0.01uF | 10% | 25V |
| C4801 | 1-107-826-11 | CERAMIC CHIP | 0.1uF | 10% | 16V |
| | | < CONNECTOR > | | | |
| * CN4501 | 1-573-984-11 | CONNECTOR, BOARD TO BOARD 10P | | | |
| CN4601 | 1-691-362-11 | CONNECTOR, FFC/FPC (ZIF) 24P | | | |
| CN4701 | 1-764-709-11 | CONNECTOR, FFC/FPC (LIF) 10P | | | |
| CN4801 | 1-750-360-21 | CONNECTOR, FFC/FPC (ZIF) 24P | | | |
| CN4802 | 1-778-509-21 | PIN, CONNECTOR (PC BOARD) 11P | | | |
| CN4803 | 1-778-508-21 | PIN, CONNECTOR (PC BOARD) 6P | | | |
| CN4804 | 1-779-064-11 | PIN, CONNECTOR (PC BOARD) 12P | | | |
| CN4805 | 1-766-336-21 | CONNECTOR, FFC/FPC 6P | | | |
| | | < DIODE > | | | |
| D4604 | 8-719-976-96 | DIODE MA8047-H-TX | | | |
| D4605 | 8-713-102-80 | DIODE 1T369-01-T8A | | | |
| D4704 | 8-719-404-49 | DIODE MA111-TX | | | |
| | | < IC > | | | |
| IC4501 | 8-759-364-05 | IC M62376GP-65AD | | | |
| IC4502 | 8-759-486-77 | IC IR3Y37M4 | | | |
| IC4601 | 8-759-491-14 | IC LZ9GH174 (TRV45E/TRV55E) | | | |
| IC4601 | 8-759-491-15 | IC LZ9GH164 (TRV75/TRV75PK/TRV715) | | | |
| IC4602 | 8-759-327-01 | IC NJM062V(TE2) | | | |
| IC4701 | 8-759-075-70 | IC TA75S393F-TE85R | | | |
| IC4801 | 8-759-494-53 | IC BU9729K-E2 | | | |
| | | < COIL > | | | |
| L4501 | 1-414-754-11 | INDUCTOR | 10uH | | |
| L4502 | 1-414-754-11 | INDUCTOR | 10uH | | |
| L4503 | 1-414-754-11 | INDUCTOR | 10uH | | |

| Ref. No. | Part No. | Description | | | Remark |
|---|---|---|---|---|---|
| L4603 | 1-414-754-11 | INDUCTOR | 10uH | | |
| L4604 | 1-414-754-11 | INDUCTOR | 10uH | | |
| L4605 | 1-412-951-11 | INDUCTOR | 10uH (TRV45E/TRV55E) | | |
| L4605 | 1-412-954-11 | INDUCTOR | 18uH (TRV75/TRV75PK/TRV715) | | |
| L4701 | 1-409-536-41 | INDUCTOR | 0uH | | |
| | | < TRANSISTOR > | | | |
| Q4501 | 8-729-420-24 | TRANSISTOR | 2SB1218A-QRS-TX | | |
| Q4601 | 8-729-402-42 | TRANSISTOR | UN5213-TX | | |
| Q4602 | 8-729-402-42 | TRANSISTOR | UN5213-TX | | |
| Q4605 | 8-729-230-63 | TRANSISTOR | 2SD1819A-QRS-TX | | |
| Q4606 | 8-729-420-24 | TRANSISTOR | 2SB1218A-QRS-TX | | |
| Q4607 | 8-729-230-63 | TRANSISTOR | 2SD1819A-QRS-TX | | |
| Q4608 | 8-729-420-24 | TRANSISTOR | 2SB1218A-QRS-TX | | |
| Q4701 | 8-729-039-43 | TRANSISTOR | FP216-TL | | |
| Q4702 | 8-729-015-74 | TRANSISTOR | UN5111-TX | | |
| | | < RESISTOR > | | | |
| R4501 | 1-216-840-11 | METAL CHIP | 39K | 5% | 1/16W |
| R4505 | 1-216-841-11 | METAL CHIP | 47K | 5% | 1/16W |
| R4512 | 1-216-837-11 | METAL CHIP | 22K | 5% | 1/16W |
| R4513 | 1-216-834-11 | METAL CHIP | 12K | 5% | 1/16W |
| R4516 | 1-216-837-11 | METAL CHIP | 22K | 5% | 1/16W |
| R4517 | 1-216-835-11 | METAL CHIP | 15K | 5% | 1/16W |
| R4518 | 1-216-839-11 | METAL CHIP | 33K | 5% | 1/16W |
| R4520 | 1-216-852-11 | METAL CHIP | 390K | 5% | 1/16W |
| R4521 | 1-216-834-11 | METAL CHIP | 12K | 5% | 1/16W |
| R4522 | 1-216-840-11 | METAL CHIP | 39K | 5% | 1/16W |
| R4528 | 1-218-895-11 | RES,CHIP | 100K | 0.50% | 1/16W |
| R4531 | 1-216-821-11 | METAL CHIP | 1K | 5% | 1/16W |
| R4532 | 1-216-841-11 | METAL CHIP | 47K | 5% | 1/16W |
| R4533 | 1-216-864-11 | METAL CHIP | 0 | 5% | 1/16W |
| R4534 | 1-216-805-11 | METAL CHIP | 47 | 5% | 1/16W |
| R4535 | 1-216-805-11 | METAL CHIP | 47 | 5% | 1/16W |
| R4536 | 1-216-805-11 | METAL CHIP | 47 | 5% | 1/16W |
| R4537 | 1-216-829-11 | METAL CHIP | 4.7K | 5% | 1/16W (TRV75/TRV75PK/TRV715) |
| R4537 | 1-216-831-11 | METAL CHIP | 6.8K | 5% | 1/16W (TRV45E/TRV55E) |
| R4541 | 1-216-825-11 | METAL CHIP | 2.2K | 5% | 1/16W |
| R4542 | 1-216-824-11 | METAL CHIP | 1.8K | 5% | 1/16W |
| R4544 | 1-216-821-11 | METAL CHIP | 1K | 5% | 1/16W |
| R4603 | 1-216-864-11 | METAL CHIP | 0 | 5% | 1/16W |
| R4604 | 1-216-864-11 | METAL CHIP | 0 | 5% | 1/16W |
| R4607 | 1-216-864-11 | METAL CHIP | 0 | 5% | 1/16W |
| R4608 | 1-216-864-11 | METAL CHIP | 0 | 5% | 1/16W |
| R4610 | 1-216-845-11 | METAL CHIP | 100K | 5% | 1/16W |
| R4612 | 1-216-833-11 | METAL CHIP | 10K | 5% | 1/16W |
| R4613 | 1-216-841-11 | METAL CHIP | 47K | 5% | 1/16W |
| R4615 | 1-216-839-11 | METAL CHIP | 33K | 5% | 1/16W |
| R4617 | 1-216-833-11 | METAL CHIP | 10K | 5% | 1/16W |
| R4621 | 1-216-857-11 | METAL CHIP | 1M | 5% | 1/16W |
| R4622 | 1-216-864-11 | METAL CHIP | 0 | 5% | 1/16W |
| R4625 | 1-218-893-11 | RES,CHIP | 82K | 0.50% | 1/16W |
| R4627 | 1-218-893-11 | RES,CHIP | 82K | 0.50% | 1/16W (TRV75/TRV75PK/TRV715) |

| | |
|---|---|
| The components identified by mark ⚠ or dotted line with mark ⚠ are critical for safety.<br>Replace only with part number specified. | Les composants identifiés par une marque ⚠ sont critiques pour la sécurité.<br>Ne les remplacer que par une piéce portant le numéro spécifié. |

| Ref. No. | Part No. | Description | | | Remark |
|---|---|---|---|---|---|
| R4627 | 1-218-899-11 | RES,CHIP | 150K | 0.50% | 1/16W (TRV45E/TRV55E) |
| R4628 | 1-216-864-11 | METAL CHIP | 0 | 5% | 1/16W |
| R4629 | 1-216-833-11 | METAL CHIP | 10K | 5% | 1/16W |
| R4630 | 1-216-821-11 | METAL CHIP | 1K | 5% | 1/16W |
| R4632 | 1-216-864-11 | METAL CHIP | 0 | 5% | 1/16W (TRV75/TRV75PK/TRV715) |
| R4636 | 1-216-864-11 | METAL CHIP | 0 | 5% | 1/16W |
| R4637 | 1-216-864-11 | METAL CHIP | 0 | 5% | 1/16W |
| R4640 | 1-216-845-11 | METAL CHIP | 100K | 5% | 1/16W |
| R4641 | 1-216-839-11 | METAL CHIP | 33K | 5% | 1/16W |
| R4643 | 1-216-842-11 | METAL CHIP | 56K | 5% | 1/16W |
| R4644 | 1-216-839-11 | METAL CHIP | 33K | 5% | 1/16W |
| R4651 | 1-218-883-11 | RES,CHIP | 33K | 0.50% | 1/16W |
| R4652 | 1-218-879-11 | RES,CHIP | 22K | 0.50% | 1/16W |
| R4653 | 1-218-883-11 | RES,CHIP | 33K | 0.50% | 1/16W |
| R4654 | 1-218-879-11 | RES,CHIP | 22K | 0.50% | 1/16W |
| R4657 | 1-216-864-11 | METAL CHIP | 0 | 5% | 1/16W |
| R4658 | 1-216-864-11 | METAL CHIP | 0 | 5% | 1/16W |
| R4659 | 1-216-864-11 | METAL CHIP | 0 | 5% | 1/16W |
| R4660 | 1-216-864-11 | METAL CHIP | 0 | 5% | 1/16W |
| R4661 | 1-216-864-11 | METAL CHIP | 0 | 5% | 1/16W |
| R4669 | 1-216-864-11 | METAL CHIP | 0 | 5% | 1/16W |
| R4670 | 1-216-864-11 | METAL CHIP | 0 | 5% | 1/16W |
| R4671 | 1-216-864-11 | METAL CHIP | 0 | 5% | 1/16W |
| R4674 | 1-216-864-11 | METAL CHIP | 0 | 5% | 1/16W |
| R4676 | 1-216-864-11 | METAL CHIP | 0 | 5% | 1/16W |
| R4679 | 1-216-864-11 | METAL CHIP | 0 | 5% | 1/16W |
| R4680 | 1-216-864-11 | METAL CHIP | 0 | 5% | 1/16W |
| R4681 | 1-216-864-11 | METAL CHIP | 0 | 5% | 1/16W |
| R4685 | 1-216-845-11 | METAL CHIP | 100K | 5% | 1/16W |
| R4686 | 1-216-845-11 | METAL CHIP | 100K | 5% | 1/16W |
| R4688 | 1-216-864-11 | METAL CHIP | 0 | 5% | 1/16W |
| R4692 | 1-216-840-11 | METAL CHIP | 39K | 5% | 1/16W |
| R4693 | 1-216-849-11 | METAL CHIP | 220K | 5% | 1/16W (TRV45E/TRV55E) |
| R4693 | 1-216-850-11 | METAL CHIP | 270K | 5% | 1/16W (TRV75/TRV75PK/TRV715) |
| R4694 | 1-216-833-11 | METAL CHIP | 10K | 5% | 1/16W |
| R4695 | 1-216-833-11 | METAL CHIP | 10K | 5% | 1/16W |
| R4696 | 1-216-864-11 | METAL CHIP | 0 | 5% | 1/16W |
| R4703 | 1-216-055-00 | METAL CHIP | 1.8K | 5% | 1/10W |
| R4704 | 1-216-055-00 | METAL CHIP | 1.8K | 5% | 1/10W |
| R4705 | 1-216-845-11 | METAL CHIP | 100K | 5% | 1/16W |
| R4706 | 1-216-831-11 | METAL CHIP | 6.8K | 5% | 1/16W |
| R4707 | 1-216-837-11 | METAL CHIP | 22K | 5% | 1/16W |
| R4708 | 1-216-810-11 | METAL CHIP | 120 | 5% | 1/16W |
| R4709 | 1-216-817-11 | METAL CHIP | 470 | 5% | 1/16W |
| R4710 | 1-216-816-11 | METAL CHIP | 390 | 5% | 1/16W |
| R4801 | 1-216-823-11 | METAL CHIP | 1.5K | 5% | 1/16W |
| R4802 | 1-216-825-11 | METAL CHIP | 2.2K | 5% | 1/16W |
| R4803 | 1-216-828-11 | METAL CHIP | 3.9K | 5% | 1/16W |
| R4804 | 1-216-832-11 | METAL CHIP | 8.2K | 5% | 1/16W |
| R4805 | 1-216-838-11 | METAL CHIP | 27K | 5% | 1/16W |
| R4806 | 1-216-822-11 | METAL CHIP | 1.2K | 5% | 1/16W |
| R4807 | 1-216-809-11 | METAL CHIP | 100 | 5% | 1/16W |
| R4808 | 1-216-809-11 | METAL CHIP | 100 | 5% | 1/16W |
| R4811 | 1-216-864-11 | METAL CHIP | 0 | 5% | 1/16W |
| R4812 | 1-216-855-11 | METAL CHIP | 680K | 5% | 1/16W |

| Ref. No. | Part No. | Description | Remark |
|---|---|---|---|
| | | < SWITCH > | |
| S4801 | 1-692-088-41 | SWITCH, TACTILE (LCD BRIGHT +) | |
| S4802 | 1-692-088-41 | SWITCH, TACTILE (LCD BRIGHT -) | |
| S4803 | 1-692-088-41 | SWITCH, TACTILE (VOLUME +) | |
| S4804 | 1-692-088-41 | SWITCH, TACTILE (VOLUME -) | |
| | | < TRANSFORMER > | |
| ⚠T4701 | 1-429-507-31 | TRANSFORMER, INVERTER | |
| | A-7073-405-A | PJ-83(M) BOARD, COMPLETE (TRV3E/TRV13E/TRV23E) | |
| | | ********** | |
| | A-7073-410-A | PJ-83(H) BOARD, COMPLETE (TRV65E/TRV69E) | |
| | | ********** (Ref. No. 4000 series) | |
| | A-7073-433-A | PJ-84(H) BOARD, COMPLETE (TRV75/TRV75PK/TRV715) | |
| | | ********** | |
| | A-7073-477-A | PJ-84(S) BOARD, COMPLETE (TRV45E/TRV55E) | |
| | | ********** (Ref. No. 9000 series) | |
| | | < CAPACITOR > | |
| C101 | 1-110-569-11 | TANTAL. CHIP 47uF 20% 6.3V | |
| | | < CONNECTOR > | |
| * CN101 | 1-764-521-11 | CONNECTOR, FFC/FPC (ZIF) 12P | |
| | | < DIODE > | |
| D101 | 8-719-059-57 | DIODE MAZJ082DFLSO (EXCEPT TRV3E/TRV13E/TRV23E) | |
| D102 | 8-719-059-57 | DIODE MAZJ082DFLSO | |
| D103 | 8-719-059-57 | DIODE MAZJ082DFLSO | |
| D104 | 8-719-420-14 | DIODE MA8082-TX (TRV65E/TRV69E/TRV75/TRV75PK/TRV715) | |
| D105 | 8-719-059-57 | DIODE MAZJ082DFLSO (TRV65E/TRV69E/TRV75/TRV75PK/TRV715) | |
| D106 | 8-719-059-57 | DIODE MAZJ082DFLSO (TRV65E/TRV69E/TRV75/TRV75PK/TRV715) | |
| | | < JACK > | |
| J101 | 1-537-747-21 | TERMINAL BOARD (S VIDEO/VIDEO/AUDIO) (TRV65E/TRV69E/TRV75/TRV75PK/TRV715) | |
| J101 | 1-537-747-31 | TERMINAL BOARD (S VIDEO/VIDEO/AUDIO) (TRV45E/TRV55E) | |
| J101 | 1-537-747-41 | TERMINAL BOARD (VIDEO/AUDIO) (TRV3E/TRV13E/TRV23E) | |
| | | < COIL > | |
| L101 | 1-414-072-11 | INDUCTOR 1uH | |
| L102 | 1-216-295-91 | SHORT 0 | |
| L103 | 1-216-295-91 | SHORT 0 (EXCEPT TRV3E/TRV13E/TRV23E) | |
| L104 | 1-216-295-91 | SHORT 0 (EXCEPT TRV3E/TRV13E/TRV23E) | |

The components identified by mark ⚠ or dotted line with mark ⚠ are critical for safety.
Replace only with part number specified.

Les composants identifiés par une marque ⚠ sont critiques pour la sécurité.
Ne les remplacer que par une piéce portant le numéro spécifié.

| Ref. No. | Part No. | Description | Remark |
|---|---|---|---|
| | | < TRANSISTOR > | |
| Q101 | 8-729-101-07 | TRANSISTOR 2SB798-T1-DLDK | |
| Q102 | 8-729-230-63 | TRANSISTOR 2SD1819A-QRS-TX | |
| | | < RESISTOR > | |
| R101 | 1-216-864-11 | METAL CHIP 0 5% 1/16W | |
| R102 | 1-216-138-00 | METAL CHIP 3.3 5% 1/8W | |
| R103 | 1-216-830-11 | METAL CHIP 5.6K 5% 1/16W | |
| R104 | 1-216-820-11 | METAL CHIP 820 5% 1/16W | |
| R105 | 1-216-836-11 | METAL CHIP 18K 5% 1/16W | |
| R106 | 1-216-864-11 | METAL CHIP 0 5% 1/16W | (TRV65E/TRV69E/TRV75/TRV75PK/TRV715) |
| R107 | 1-216-864-11 | METAL CHIP 0 5% 1/16W | (TRV65E/TRV69E/TRV75/TRV75PK/TRV715) |
| R108 | 1-216-821-11 | METAL CHIP 1K 5% 1/16W | (TRV65E/TRV69E/TRV75/TRV75PK/TRV715) |
| R109 | 1-216-821-11 | METAL CHIP 1K 5% 1/16W | |
| | A-7073-404-A | SE-66(V) BOARD, COMPLETE | (TRV3E/TRV13E/TRV23E) |
| | | ********** | |
| | A-7073-409-A | SE-66(VH) BOARD, COMPLETE | (TRV65E/TRV69E) |
| | | ********** | (Ref. No. 4000 series) |
| | A-7073-434-A | SE-67(VH) BOARD, COMPLETE | (TRV45E/TRV55E/TRV75/TRV75PK/TRV715) |
| | | ********** | (Ref. No. 9000 series) |
| | | < CAPACITOR > | |
| C451 | 1-164-004-11 | CERAMIC CHIP 0.1uF 10% 25V | (EXCEPT TRV3E/TRV13E/TRV23E) |
| C452 | 1-164-004-11 | CERAMIC CHIP 0.1uF 10% 25V | (EXCEPT TRV3E/TRV13E/TRV23E) |
| C453 | 1-104-847-11 | TANTAL. CHIP 22uF 20% 4V | (EXCEPT TRV3E/TRV13E/TRV23E) |
| C454 | 1-104-847-11 | TANTAL. CHIP 22uF 20% 4V | (EXCEPT TRV3E/TRV13E/TRV23E) |
| C457 | 1-164-343-11 | CERAMIC CHIP 0.056uF 10% 25V | (EXCEPT TRV3E/TRV13E/TRV23E) |
| C458 | 1-164-343-11 | CERAMIC CHIP 0.056uF 10% 25V | (EXCEPT TRV3E/TRV13E/TRV23E) |
| C459 | 1-164-343-11 | CERAMIC CHIP 0.056uF 10% 25V | (EXCEPT TRV3E/TRV13E/TRV23E) |
| C460 | 1-110-666-11 | ELECT CHIP 22uF 20% 6.3V | (EXCEPT TRV3E/TRV13E/TRV23E) |
| C461 | 1-164-343-11 | CERAMIC CHIP 0.056uF 10% 25V | (EXCEPT TRV3E/TRV13E/TRV23E) |
| C462 | 1-110-666-11 | ELECT CHIP 22uF 20% 6.3V | (EXCEPT TRV3E/TRV13E/TRV23E) |
| C464 | 1-110-501-11 | CERAMIC CHIP 0.33uF 10% 16V | (EXCEPT TRV3E/TRV13E/TRV23E) |
| C465 | 1-135-259-11 | TANTAL. CHIP 10uF 20% 6.3V | (EXCEPT TRV3E/TRV13E/TRV23E) |
| C466 | 1-162-970-11 | CERAMIC CHIP 0.01uF 10% 25V | (EXCEPT TRV3E/TRV13E/TRV23E) |

| Ref. No. | Part No. | Description | Remark |
|---|---|---|---|
| | | < CONNECTOR > | |
| CN451 | 1-691-348-11 | CONNECTOR, FFC/FPC (ZIF) 10P | |
| | | < DIODE > | |
| D451 | 8-719-059-57 | DIODE MAZJ082DFLSO | |
| D452 | 8-719-059-57 | DIODE MAZJ082DFLSO | (EXCEPT TRV3E/TRV13E/TRV23E) |
| | | < IC > | |
| IC451 | 8-759-489-19 | IC uPC6756GR-8JG-E2 | (EXCEPT TRV3E/TRV13E/TRV23E) |
| | | < JACK > | |
| J451 | 1-695-514-11 | JACK (SMALL TYPE) 1P (EARPHONE) | (TRV3E/TRV13E/TRV23E) |
| J451 | 1-695-514-21 | JACK (SMALL TYPE) 1P (HEADPHONE) | (EXCEPT TRV3E/TRV13E/TRV23E) |
| | | < COIL > | |
| L451 | 1-414-754-11 | INDUCTOR 10uH | (EXCEPT TRV3E/TRV13E/TRV23E) |
| L453 | 1-216-295-91 | SHORT 0 | |
| L454 | 1-216-295-91 | SHORT 0 | (EXCEPT TRV3E/TRV13E/TRV23E) |
| | | < RESISTOR > | |
| R451 | 1-216-837-11 | METAL CHIP 22K 5% 1/16W | (EXCEPT TRV3E/TRV13E/TRV23E) |
| R452 | 1-216-837-11 | METAL CHIP 22K 5% 1/16W | (EXCEPT TRV3E/TRV13E/TRV23E) |
| R453 | 1-216-837-11 | METAL CHIP 22K 5% 1/16W | (EXCEPT TRV3E/TRV13E/TRV23E) |
| R454 | 1-216-837-11 | METAL CHIP 22K 5% 1/16W | (EXCEPT TRV3E/TRV13E/TRV23E) |
| R455 | 1-216-864-11 | METAL CHIP 0 5% 1/16W | (EXCEPT TRV3E/TRV13E/TRV23E) |
| R456 | 1-216-857-11 | METAL CHIP 1M 5% 1/16W | (EXCEPT TRV3E/TRV13E/TRV23E) |
| R458 | 1-216-833-11 | METAL CHIP 10K 5% 1/16W | (EXCEPT TRV3E/TRV13E/TRV23E) |
| R459 | 1-216-857-11 | METAL CHIP 1M 5% 1/16W | (EXCEPT TRV3E/TRV13E/TRV23E) |
| R461 | 1-216-835-11 | METAL CHIP 15K 5% 1/16W | (EXCEPT TRV3E/TRV13E/TRV23E) |
| R463 | 1-216-809-11 | METAL CHIP 100 5% 1/16W | (EXCEPT TRV3E/TRV13E/TRV23E) |
| | | < SENSOR > | |
| SE451 | 1-803-041-31 | SENSOR, ANGULAR VELOCITY (PITCH) | (EXCEPT TRV3E/TRV13E/TRV23E) |
| SE452 | 1-803-041-41 | SENSOR, ANGULAR VELOCITY (YAW) | (EXCEPT TRV3E/TRV13E/TRV23E) |

| Ref. No. | Part No. | Description | Remark |
|---|---|---|---|
| | A-7093-449-A | VC-195(VHIOU) BOARD, COMPLETE (TRV75/TRV75PK/715) | |
| | | ********** | |
| | A-7093-453-A | VC-195(VH0E) BOARD, COMPLETE (TRV65E) | |
| | | ********** | |
| | A-7093-456-A | VC-195(VZ0P) BOARD, COMPLETE (TRV3E/TRV13E/TRV23E) | |
| | | ********** | |
| | A-7093-460-A | VC-195(VMROP) BOARD, COMPLETE (TRV55E) | |
| | | ********** | |
| | A-7093-461-A | VC-195 (VMOP) BOARD, COMPLETE (TRV45E) | |
| | | ********** | |
| | A-7093-732-A | VC-195(VHODE) BOARD, COMPLETE (TRV69E) | |
| | | ********** | |
| | | (Ref. No. 1.000 series) | |
| | | < CAPACITOR > | |
| C001 | 1-162-970-11 | CERAMIC CHIP 0.01uF 10% 25V | |
| C004 | 1-162-970-11 | CERAMIC CHIP 0.01uF 10% 25V | |
| C006 | 1-104-752-11 | TANTAL. CHIP 33uF 20% 6.3V | |
| C007 | 1-104-752-11 | TANTAL. CHIP 33uF 20% 6.3V | |
| C008 | 1-162-927-11 | CERAMIC CHIP 100PF 5% 50V | |
| C009 | 1-164-217-11 | CERAMIC CHIP 150PF 5% 50V | |
| C010 | 1-162-970-11 | CERAMIC CHIP 0.01uF 10% 25V | |
| C011 | 1-162-926-11 | CERAMIC CHIP 82PF 5% 50V | |
| C012 | 1-162-927-11 | CERAMIC CHIP 100PF 5% 50V | |
| C013 | 1-162-970-11 | CERAMIC CHIP 0.01uF 10% 25V (TRV75/TRV75PK/TRV715) | |
| C014 | 1-162-970-11 | CERAMIC CHIP 0.01uF 10% 25V (TRV75/TRV75PK/TRV715) | |
| C015 | 1-162-970-11 | CERAMIC CHIP 0.01uF 10% 25V (TRV75/TRV75PK/TRV715) | |
| C016 | 1-162-970-11 | CERAMIC CHIP 0.01uF 10% 25V (TRV75/TRV75PK/TRV715) | |
| C017 | 1-162-964-11 | CERAMIC CHIP 0.001uF 10% 50V | |
| C018 | 1-162-970-11 | CERAMIC CHIP 0.01uF 10% 25V | |
| C019 | 1-162-964-11 | CERAMIC CHIP 0.001uF 10% 50V | |
| C020 | 1-162-964-11 | CERAMIC CHIP 0.001uF 10% 50V (TRV75/TRV75PK/TRV715) | |
| C021 | 1-164-156-11 | CERAMIC CHIP 0.1uF 25V | |
| C022 | 1-162-970-11 | CERAMIC CHIP 0.01uF 10% 25V | |
| C023 | 1-165-176-11 | CERAMIC CHIP 0.047uF 10% 16V | |
| C024 | 1-165-176-11 | CERAMIC CHIP 0.047uF 10% 16V | |
| C025 | 1-162-964-11 | CERAMIC CHIP 0.001uF 10% 50V (TRV75/TRV75PK/TRV715) | |
| C026 | 1-162-970-11 | CERAMIC CHIP 0.01uF 10% 25V | |
| C027 | 1-162-970-11 | CERAMIC CHIP 0.01uF 10% 25V | |
| C028 | 1-135-259-11 | TANTAL. CHIP 10uF 20% 6.3V | |
| C029 | 1-162-970-11 | CERAMIC CHIP 0.01uF 10% 25V | |
| C030 | 1-162-970-11 | CERAMIC CHIP 0.01uF 10% 25V | |
| C031 | 1-162-970-11 | CERAMIC CHIP 0.01uF 10% 25V | |
| C032 | 1-165-176-11 | CERAMIC CHIP 0.047uF 10% 16V | |
| C033 | 1-165-176-11 | CERAMIC CHIP 0.047uF 10% 16V | |
| C034 | 1-107-826-11 | CERAMIC CHIP 0.1uF 10% 16V | |
| C035 | 1-162-920-11 | CERAMIC CHIP 27PF 5% 50V | |
| C036 | 1-162-970-11 | CERAMIC CHIP 0.01uF 10% 25V | |
| C037 | 1-162-970-11 | CERAMIC CHIP 0.01uF 10% 25V | |
| C038 | 1-162-970-11 | CERAMIC CHIP 0.01uF 10% 25V (TRV75/TRV75PK/TRV715) | |
| C039 | 1-162-970-11 | CERAMIC CHIP 0.01uF 10% 25V | |
| C040 | 1-162-970-11 | CERAMIC CHIP 0.01uF 10% 25V (TRV75/TRV75PK/TRV715) | |
| C041 | 1-107-826-11 | CERAMIC CHIP 0.1uF 10% 16V | |
| C042 | 1-162-970-11 | CERAMIC CHIP 0.01uF 10% 25V | |
| C043 | 1-162-970-11 | CERAMIC CHIP 0.01uF 10% 25V | |
| C047 | 1-162-970-11 | CERAMIC CHIP 0.01uF 10% 25V (TRV69E) | |
| C048 | 1-162-970-11 | CERAMIC CHIP 0.01uF 10% 25V | |
| C049 | 1-162-970-11 | CERAMIC CHIP 0.01uF 10% 25V | |
| C050 | 1-162-970-11 | CERAMIC CHIP 0.01uF 10% 25V | |
| C052 | 1-162-970-11 | CERAMIC CHIP 0.01uF 10% 25V | |
| C053 | 1-162-970-11 | CERAMIC CHIP 0.01uF 10% 25V | |
| C055 | 1-162-970-11 | CERAMIC CHIP 0.01uF 10% 25V | |
| C058 | 1-162-968-11 | CERAMIC CHIP 0.0047uF 10% 50V | |
| C059 | 1-164-217-11 | CERAMIC CHIP 150PF 5% 50V | |
| C060 | 1-163-809-11 | CERAMIC CHIP 0.047uF 10% 25V | |
| C061 | 1-162-970-11 | CERAMIC CHIP 0.01uF 10% 25V | |
| C062 | 1-162-926-11 | CERAMIC CHIP 82PF 5% 50V | |
| C065 | 1-162-970-11 | CERAMIC CHIP 0.01uF 10% 25V | |
| C068 | 1-162-921-11 | CERAMIC CHIP 33PF 5% 50V | |
| C069 | 1-162-970-11 | CERAMIC CHIP 0.01uF 10% 25V | |
| C070 | 1-162-908-11 | CERAMIC CHIP 3PF 0.25PF 50V | |
| C071 | 1-104-752-11 | TANTAL. CHIP 33uF 20% 6.3V | |
| C072 | 1-162-958-11 | CERAMIC CHIP 270PF 5% 50V | |
| C073 | 1-164-392-11 | CERAMIC CHIP 390PF 5% 50V | |
| C074 | 1-162-915-11 | CERAMIC CHIP 10PF 0.5PF 50V (TRV65E/TRV69E/TRV75/TRV75PK/TRV715) | |
| C075 | 1-164-315-11 | CERAMIC CHIP 470PF 5% 50V (TRV3E/TRV13E/TRV23E) | |
| C075 | 1-162-959-11 | CERAMIC CHIP 330PF 5% 50V (EXCEPT TRV3E/TRV13E/TRV23E) | |
| C076 | 1-162-921-11 | CERAMIC CHIP 33PF 5% 50V (TRV75/TRV75PK/TRV715) | |
| C076 | 1-162-922-11 | CERAMIC CHIP 39PF 5% 50V (TRV65E/TRV69E) | |
| C078 | 1-162-928-11 | CERAMIC CHIP 120PF 5% 50V | |
| C079 | 1-162-922-11 | CERAMIC CHIP 39PF 5% 50V (TRV65E/TRV69E/TRV75/TRV75PK/TRV715) | |
| C080 | 1-162-915-11 | CERAMIC CHIP 10PF 0.5PF 50V (TRV65E/TRV69E/TRV75/TRV75PK/TRV715) | |
| C080 | 1-162-919-11 | CERAMIC CHIP 22PF 5% 50V (TRV3E/TRV13E/TRV23E/TRV45E/TRV55E) | |
| C081 | 1-162-916-11 | CERAMIC CHIP 12PF 5% 50V | |
| C082 | 1-162-915-11 | CERAMIC CHIP 10PF 0.5PF 50V | |
| C083 | 1-162-924-11 | CERAMIC CHIP 56PF 5% 50V (TRV3E/TRV13E/TRV23E/TRV45E/TRV55E/TRV65E/TRV69E) | |
| C083 | 1-162-926-11 | CERAMIC CHIP 82PF 5% 50V (TRV75/TRV75PK/TRV715) | |
| C085 | 1-162-970-11 | CERAMIC CHIP 0.01uF 10% 25V | |
| C086 | 1-115-156-11 | CERAMIC CHIP 1uF 10V | |
| C088 | 1-162-925-11 | CERAMIC CHIP 68PF 5% 50V (TRV3E/TRV13E/TRV23E/TRV45E/TRV55E) | |
| C088 | 1-162-957-11 | CERAMIC CHIP 220PF 5% 50V (TRV65E/TRV69E/TRV75/TRV75PK/TRV715) | |
| C089 | 1-162-919-11 | CERAMIC CHIP 22PF 5% 50V (TRV3E/TRV13E/TRV23E) | |
| C089 | 1-162-923-11 | CERAMIC CHIP 47PF 5% 50V (TRV65E/TRV69E/TRV75/TRV75PK/TRV715) | |
| C089 | 1-162-925-11 | CERAMIC CHIP 68PF 5% 50V (TRV45E/TRV55E) | |
| C090 | 1-162-958-11 | CERAMIC CHIP 270PF 5% 50V | |

| Ref. No. | Part No. | Description | | | Remark |
|---|---|---|---|---|---|
| C152 | 1-162-970-11 | CERAMIC CHIP | 0.01uF | 10% | 25V |
| C156 | 1-164-677-11 | CERAMIC CHIP | 0.033uF | 10% | 16V |
| C157 | 1-162-964-11 | CERAMIC CHIP | 0.001uF | 10% | 50V |
| | | (EXCEPT TRV3E/TRV13E/TRV23E) | | | |
| C158 | 1-162-970-11 | CERAMIC CHIP | 0.01uF | 10% | 25V |
| C159 | 1-164-346-11 | CERAMIC CHIP | 1uF | | 16V |
| C160 | 1-162-970-11 | CERAMIC CHIP | 0.01uF | 10% | 25V |
| C161 | 1-115-467-11 | CERAMIC CHIP | 0.22uF | 10% | 10V |
| C162 | 1-135-180-21 | TANTALUM CHIP | 3.3uF | 20% | 6.3V |
| | | (TRV65E/TRV69E/TRV75/TRV75PK/TRV715) | | | |
| C163 | 1-135-180-21 | TANTALUM CHIP | 3.3uF | 20% | 6.3V |
| C164 | 1-162-970-11 | CERAMIC CHIP | 0.01uF | 10% | 25V |
| | | (TRV65E/TRV69E/TRV75/TRV75PK/TRV715) | | | |
| C166 | 1-162-970-11 | CERAMIC CHIP | 0.01uF | 10% | 25V |
| C168 | 1-109-982-11 | CERAMIC CHIP | 1uF | 10% | 10V |
| C169 | 1-109-982-11 | CERAMIC CHIP | 1uF | 10% | 10V |
| C170 | 1-162-970-11 | CERAMIC CHIP | 0.01uF | 10% | 25V |
| C171 | 1-162-970-11 | CERAMIC CHIP | 0.01uF | 10% | 25V |
| | | (EXCEPT TRV3E/TRV13E/TRV23E) | | | |
| C172 | 1-110-501-11 | CERAMIC CHIP | 0.33uF | 10% | 16V |
| | | (EXCEPT TRV3E/TRV13E/TRV23E) | | | |
| C173 | 1-164-227-11 | CERAMIC CHIP | 0.022uF | 10% | 25V |
| | | (EXCEPT TRV3E/TRV13E/TRV23E) | | | |
| C174 | 1-162-928-11 | CERAMIC CHIP | 120PF | 5% | 50V |
| | | (TRV45E/TRV55E/TRV65ETRV69E) | | | |
| C174 | 1-164-217-11 | CERAMIC CHIP | 150PF | 5% | 50V |
| | | (TRV75/TRV75PK/TRV715) | | | |
| C175 | 1-162-964-11 | CERAMIC CHIP | 0.001uF | 10% | 50V |
| | | (EXCEPT TRV3E/TRV13E/TRV23E) | | | |
| C177 | 1-162-927-11 | CERAMIC CHIP | 100PF | 5% | 50V |
| | | (EXCEPT TRV3E/TRV13E/TRV23E) | | | |
| C178 | 1-162-970-11 | CERAMIC CHIP | 0.01uF | 10% | 25V |
| | | (EXCEPT TRV3E/TRV13E/TRV23E) | | | |
| C179 | 1-162-919-11 | CERAMIC CHIP | 22PF | 5% | 50V |
| | | (EXCEPT TRV3E/TRV13E/TRV23E) | | | |
| C180 | 1-115-467-11 | CERAMIC CHIP | 0.22uF | 10% | 10V |
| C181 | 1-162-970-11 | CERAMIC CHIP | 0.01uF | 10% | 25V |
| | | (TRV65E/TRV69E/TRV75/TRV75PK/TRV715) | | | |
| C182 | 1-135-149-21 | TANTALUM CHIP | 2.2uF | 20% | 10V |
| C183 | 1-135-149-21 | TANTALUM CHIP | 2.2uF | 20% | 10V |
| | | (TRV65E/TRV69E/TRV75/TRV75PK/TRV715) | | | |
| C184 | 1-115-156-11 | CERAMIC CHIP | 1uF | | 10V |
| C185 | 1-126-246-11 | ELECT CHIP | 220uF | 20% | 4V |
| C187 | 1-126-246-11 | ELECT CHIP | 220uF | 20% | 4V |
| | | (TRV65E/TRV69E/TRV75/TRV75PK/TRV715) | | | |
| C188 | 1-135-259-11 | TANTAL. CHIP | 10uF | 20% | 6.3V |
| C190 | 1-107-826-11 | CERAMIC CHIP | 0.1uF | 10% | 16V |
| C191 | 1-162-970-11 | CERAMIC CHIP | 0.01uF | 10% | 25V |
| C192 | 1-104-852-11 | TANTAL. CHIP | 22uF | 20% | 6.3V |
| C202 | 1-135-259-11 | TANTAL. CHIP | 10uF | 20% | 6.3V |
| C204 | 1-162-964-11 | CERAMIC CHIP | 0.001uF | 10% | 50V |
| C205 | 1-115-156-11 | CERAMIC CHIP | 1uF | | 10V |
| C206 | 1-162-967-11 | CERAMIC CHIP | 0.0033uF | 10% | 50V |
| C207 | 1-162-965-11 | CERAMIC CHIP | 0.0015uF | 10% | 50V |
| C209 | 1-162-915-11 | CERAMIC CHIP | 10PF | 0.5PF | 50V |
| | | (TRV65E/TRV69E/TRV75/TRV75PK/TRV715) | | | |
| C209 | 1-162-921-11 | CERAMIC CHIP | 33PF | 5% | 50V |
| | | (TRV3E/TRV13E/TRV23E/TRV45E/TRV55E) | | | |
| C210 | 1-162-922-11 | CERAMIC CHIP | 39PF | 5% | 50V |
| | | (TRV65E/TRV69E/TRV75/TRV75PK/TRV715) | | | |
| C211 | 1-135-181-21 | TANTALUM CHIP | 4.7uF | 20% | 6.3V |
| C212 | 1-164-392-11 | CERAMIC CHIP | 390PF | 5% | 50V |
| C217 | 1-162-970-11 | CERAMIC CHIP | 0.01uF | 10% | 25V |

| Ref. No. | Part No. | Description | | | Remark |
|---|---|---|---|---|---|
| C218 | 1-107-823-11 | CERAMIC CHIP | 0.47uF | 10% | 16V |
| C219 | 1-109-982-11 | CERAMIC CHIP | 1uF | 10% | 10V |
| C224 | 1-162-927-11 | CERAMIC CHIP | 100PF | 5% | 50V |
| C225 | 1-162-970-11 | CERAMIC CHIP | 0.01uF | 10% | 25V |
| C226 | 1-109-982-11 | CERAMIC CHIP | 1uF | 10% | 10V |
| C227 | 1-135-201-11 | TANTALUM CHIP | 10uF | 20% | 4V |
| C229 | 1-162-970-11 | CERAMIC CHIP | 0.01uF | 10% | 25V |
| C230 | 1-115-156-11 | CERAMIC CHIP | 1uF | | 10V |
| C232 | 1-164-156-11 | CERAMIC CHIP | 0.1uF | | 25V |
| C233 | 1-135-201-11 | TANTALUM CHIP | 10uF | 20% | 4V |
| C234 | 1-162-970-11 | CERAMIC CHIP | 0.01uF | 10% | 25V |
| C235 | 1-162-970-11 | CERAMIC CHIP | 0.01uF | 10% | 25V |
| C237 | 1-164-156-11 | CERAMIC CHIP | 0.1uF | | 25V |
| C239 | 1-115-156-11 | CERAMIC CHIP | 1uF | | 10V |
| C243 | 1-115-156-11 | CERAMIC CHIP | 1uF | | 10V |
| | | (TRV65E/TRV69E/TRV75/TRV75PK/TRV715) | | | |
| C243 | 1-162-970-11 | CERAMIC CHIP | 0.01uF | 10% | 25V |
| | | | | | (TRV55E) |
| C244 | 1-115-156-11 | CERAMIC CHIP | 1uF | | 10V |
| | | (TRV55E/TRV65E/TRV75/TRV75PK/TRV715) | | | |
| C245 | 1-162-970-11 | CERAMIC CHIP | 0.01uF | 10% | 25V |
| C246 | 1-162-970-11 | CERAMIC CHIP | 0.01uF | 10% | 25V |
| C247 | 1-135-201-11 | TANTALUM CHIP | 10uF | 20% | 4V |
| C250 | 1-162-970-11 | CERAMIC CHIP | 0.01uF | 10% | 25V |
| C252 | 1-135-259-11 | TANTAL. CHIP | 10uF | 20% | 6.3V |
| | | | | | (TRV55E) |
| C301 | 1-135-201-11 | TANTALUM CHIP | 10uF | 20% | 4V |
| C302 | 1-135-201-11 | TANTALUM CHIP | 10uF | 20% | 4V |
| | | (EXCEPT TRV3E/TRV13E/TRV23E) | | | |
| C307 | 1-135-151-21 | TANTALUM CHIP | 4.7uF | 20% | 4V |
| C308 | 1-135-259-11 | TANTAL. CHIP | 10uF | 20% | 6.3V |
| C309 | 1-135-318-11 | TANTAL. CHIP | 33uF | 20% | 4V |
| C310 | 1-104-847-11 | TANTAL. CHIP | 22uF | 20% | 4V |
| C312 | 1-107-823-11 | CERAMIC CHIP | 0.47uF | 10% | 16V |
| C313 | 1-115-467-11 | CERAMIC CHIP | 0.22uF | 10% | 10V |
| | | (EXCEPT TRV3E/TRV13E/TRV23E) | | | |
| C316 | 1-115-467-11 | CERAMIC CHIP | 0.22uF | 10% | 10V |
| C317 | 1-115-467-11 | CERAMIC CHIP | 0.22uF | 10% | 10V |
| | | (EXCEPT TRV3E/TRV13E/TRV23E) | | | |
| C318 | 1-104-847-11 | TANTAL. CHIP | 22uF | 20% | 4V |
| C319 | 1-115-467-11 | CERAMIC CHIP | 0.22uF | 10% | 10V |
| C320 | 1-107-826-11 | CERAMIC CHIP | 0.1uF | 10% | 16V |
| C321 | 1-162-968-11 | CERAMIC CHIP | 0.0047uF | 10% | 50V |
| | | (EXCEPT TRV3E/TRV13E/TRV23E) | | | |
| C322 | 1-163-017-00 | CERAMIC CHIP | 0.0047uF | 5% | 50V |
| C323 | 1-162-970-11 | CERAMIC CHIP | 0.01uF | 10% | 25V |
| | | (EXCEPT TRV3E/TRV13E/TRV23E) | | | |
| C324 | 1-109-982-11 | CERAMIC CHIP | 1uF | 10% | 10V |
| | | (EXCEPT TRV3E/TRV13E/TRV23E) | | | |
| C325 | 1-162-970-11 | CERAMIC CHIP | 0.01uF | 10% | 25V |
| | | (TRV3E/TRV13E/TRV23E) | | | |
| C327 | 1-162-970-11 | CERAMIC CHIP | 0.01uF | 10% | 25V |
| | | (EXCEPT TRV3E/TRV13E/TRV23E) | | | |
| C326 | 1-109-982-11 | CERAMIC CHIP | 1uF | 10% | 10V |
| C328 | 1-164-232-11 | CERAMIC CHIP | 0.01uF | | 50V |
| C329 | 1-162-970-11 | CERAMIC CHIP | 0.01uF | 10% | 25V |
| | | (TRV75/TRV75PK/TRV715) | | | |
| C330 | 1-109-982-11 | CERAMIC CHIP | 1uF | 10% | 10V |
| | | (EXCEPT TRV3E/TRV13E/TRV23E) | | | |
| C331 | 1-162-968-11 | CERAMIC CHIP | 0.0047uF | 10% | 50V |
| | | (EXCEPT TRV3E/TRV13E/TRV23E) | | | |
| C332 | 1-109-982-11 | CERAMIC CHIP | 1uF | 10% | 10V |

| Ref. No. | Part No. | Description | | | Remark |
|---|---|---|---|---|---|
| C333 | 1-162-968-11 | CERAMIC CHIP | 0.0047uF | 10% | 50V |
| C334 | 1-115-467-11 | CERAMIC CHIP | 0.22uF | 10% | 10V |
| | | | | | (EXCEPT TRV3E/TRV13E/TRV23E) |
| C335 | 1-115-467-11 | CERAMIC CHIP | 0.22uF | 10% | 10V |
| C336 | 1-109-982-11 | CERAMIC CHIP | 1uF | 10% | 10V |
| | | | | | (EXCEPT TRV3E/TRV13E/TRV23E) |
| C337 | 1-109-982-11 | CERAMIC CHIP | 1uF | 10% | 10V |
| C338 | 1-109-982-11 | CERAMIC CHIP | 1uF | 10% | 10V |
| C339 | 1-109-982-11 | CERAMIC CHIP | 1uF | 10% | 10V |
| | | | | | (EXCEPT TRV3E/TRV13E/TRV23E) |
| C340 | 1-109-982-11 | CERAMIC CHIP | 1uF | 10% | 10V |
| C341 | 1-109-982-11 | CERAMIC CHIP | 1uF | 10% | 10V |
| | | | | | (EXCEPT TRV3E/TRV13E/TRV23E) |
| C342 | 1-165-176-11 | CERAMIC CHIP | 0.047uF | 10% | 16V |
| C344 | 1-162-970-11 | CERAMIC CHIP | 0.01uF | 10% | 25V |
| | | | | | (EXCEPT TRV3E/TRV13E/TRV23E) |
| C346 | 1-162-970-11 | CERAMIC CHIP | 0.01uF | 10% | 25V |
| C347 | 1-162-970-11 | CERAMIC CHIP | 0.01uF | 10% | 25V |
| C349 | 1-162-970-11 | CERAMIC CHIP | 0.01uF | 10% | 25V |
| C367 | 1-162-969-11 | CERAMIC CHIP | 0.0068uF | 10% | 25V |
| | | | | | (TRV55E) |
| C371 | 1-104-908-11 | TANTAL. CHIP | 47uF | 20% | 4V |
| C372 | 1-104-908-11 | TANTAL. CHIP | 47uF | 20% | 4V |
| C378 | 1-135-259-11 | TANTAL. CHIP | 10uF | 20% | 6.3V |
| C380 | 1-135-259-11 | TANTAL. CHIP | 10uF | 20% | 6.3V |
| C381 | 1-164-346-11 | CERAMIC CHIP | 1uF | | 16V |
| C382 | 1-164-227-11 | CERAMIC CHIP | 0.022uF | 10% | 25V |
| C383 | 1-107-826-11 | CERAMIC CHIP | 0.1uF | 10% | 16V |
| C384 | 1-107-826-11 | CERAMIC CHIP | 0.1uF | 10% | 16V |
| C385 | 1-107-826-11 | CERAMIC CHIP | 0.1uF | 10% | 16V |
| C386 | 1-107-826-11 | CERAMIC CHIP | 0.1uF | 10% | 16V |
| C387 | 1-104-847-11 | TANTAL. CHIP | 22uF | 20% | 4V |
| C388 | 1-162-961-11 | CERAMIC CHIP | 330PF | 10% | 50V |
| C402 | 1-109-982-11 | CERAMIC CHIP | 1uF | 10% | 10V |
| C404 | 1-162-915-11 | CERAMIC CHIP | 10PF | 0.5PF | 50V |
| C405 | 1-162-915-11 | CERAMIC CHIP | 10PF | 0.5PF | 50V |
| C406 | 1-162-970-11 | CERAMIC CHIP | 0.01uF | 10% | 25V |
| C410 | 1-109-982-11 | CERAMIC CHIP | 1uF | 10% | 10V |
| C411 | 1-162-969-11 | CERAMIC CHIP | 0.0068uF | 10% | 25V |
| C412 | 1-162-969-11 | CERAMIC CHIP | 0.0068uF | 10% | 25V |
| C414 | 1-164-156-11 | CERAMIC CHIP | 0.1uF | | 25V |
| C415 | 1-164-156-11 | CERAMIC CHIP | 0.1uF | | 25V |
| C416 | 1-164-156-11 | CERAMIC CHIP | 0.1uF | | 25V |
| C417 | 1-164-156-11 | CERAMIC CHIP | 0.1uF | | 25V |
| C418 | 1-164-156-11 | CERAMIC CHIP | 0.1uF | | 25V |
| C419 | 1-164-156-11 | CERAMIC CHIP | 0.1uF | | 25V |
| C420 | 1-162-970-11 | CERAMIC CHIP | 0.01uF | 10% | 25V |
| C451 | 1-107-826-11 | CERAMIC CHIP | 0.1uF | 10% | 16V |
| C452 | 1-107-826-11 | CERAMIC CHIP | 0.1uF | 10% | 16V |
| C453 | 1-107-826-11 | CERAMIC CHIP | 0.1uF | 10% | 16V |
| C454 | 1-162-968-11 | CERAMIC CHIP | 0.0047uF | 10% | 50V |
| C455 | 1-162-968-11 | CERAMIC CHIP | 0.0047uF | 10% | 50V |
| C456 | 1-107-826-11 | CERAMIC CHIP | 0.1uF | 10% | 16V |
| C457 | 1-162-968-11 | CERAMIC CHIP | 0.0047uF | 10% | 50V |
| C458 | 1-107-826-11 | CERAMIC CHIP | 0.1uF | 10% | 16V |
| C459 | 1-107-826-11 | CERAMIC CHIP | 0.1uF | 10% | 16V |
| C460 | 1-162-970-11 | CERAMIC CHIP | 0.01uF | 10% | 25V |
| C461 | 1-165-176-11 | CERAMIC CHIP | 0.047uF | 10% | 16V |
| C462 | 1-162-970-11 | CERAMIC CHIP | 0.01uF | 10% | 25V |

| Ref. No. | Part No. | Description | | | Remark |
|---|---|---|---|---|---|
| C463 | 1-165-176-11 | CERAMIC CHIP | 0.047uF | 10% | 16V |
| C464 | 1-107-826-11 | CERAMIC CHIP | 0.1uF | 10% | 16V |
| C465 | 1-109-982-11 | CERAMIC CHIP | 1uF | 10% | 10V |
| C467 | 1-162-968-11 | CERAMIC CHIP | 0.0047uF | 10% | 50V |
| C468 | 1-165-176-11 | CERAMIC CHIP | 0.047uF | 10% | 16V |
| C469 | 1-107-826-11 | CERAMIC CHIP | 0.1uF | 10% | 16V |
| C470 | 1-162-970-11 | CERAMIC CHIP | 0.01uF | 10% | 25V |
| C471 | 1-162-970-11 | CERAMIC CHIP | 0.01uF | 10% | 25V |
| C472 | 1-164-156-11 | CERAMIC CHIP | 0.1uF | | 25V |
| C473 | 1-164-227-11 | CERAMIC CHIP | 0.022uF | 10% | 25V |
| C474 | 1-162-964-11 | CERAMIC CHIP | 0.001uF | 10% | 50V |
| C475 | 1-162-964-11 | CERAMIC CHIP | 0.001uF | 10% | 50V |
| C476 | 1-165-176-11 | CERAMIC CHIP | 0.047uF | 10% | 16V |
| C478 | 1-165-176-11 | CERAMIC CHIP | 0.047uF | 10% | 16V |
| C480 | 1-164-227-11 | CERAMIC CHIP | 0.022uF | 10% | 25V |
| C483 | 1-164-156-11 | CERAMIC CHIP | 0.1uF | | 25V |
| C484 | 1-164-156-11 | CERAMIC CHIP | 0.1uF | | 25V |
| C485 | 1-164-505-11 | CERAMIC CHIP | 2.2uF | | 16V |
| C486 | 1-164-156-11 | CERAMIC CHIP | 0.1uF | | 25V |
| C487 | 1-162-957-11 | CERAMIC CHIP | 220PF | 5% | 50V |
| C488 | 1-107-826-11 | CERAMIC CHIP | 0.1uF | 10% | 16V |
| C489 | 1-162-962-11 | CERAMIC CHIP | 470PF | 10% | 50V |
| C501 | 1-162-919-11 | CERAMIC CHIP | 22PF | 5% | 50V |
| C502 | 1-162-964-11 | CERAMIC CHIP | 0.001uF | 10% | 50V |
| C503 | 1-162-919-11 | CERAMIC CHIP | 22PF | 5% | 50V |
| C504 | 1-162-922-11 | CERAMIC CHIP | 39PF | 5% | 50V |
| C506 | 1-115-156-11 | CERAMIC CHIP | 1uF | | 10V |
| C507 | 1-115-156-11 | CERAMIC CHIP | 1uF | | 10V |
| C508 | 1-162-970-11 | CERAMIC CHIP | 0.01uF | 10% | 25V |
| C509 | 1-135-214-21 | TANTAL. CHIP | 4.7uF | 20% | 20V |
| C510 | 1-135-201-11 | TANTALUM CHIP | 10uF | 20% | 4V |
| C511 | 1-164-232-11 | CERAMIC CHIP | 0.01uF | | 50V |
| C512 | 1-107-826-11 | CERAMIC CHIP | 0.1uF | 10% | 16V |
| C513 | 1-115-156-11 | CERAMIC CHIP | 1uF | | 10V |
| C514 | 1-162-964-11 | CERAMIC CHIP | 0.001uF | 10% | 50V |
| C515 | 1-162-917-11 | CERAMIC CHIP | 15PF | 5% | 50V |
| C516 | 1-107-826-11 | CERAMIC CHIP | 0.1uF | 10% | 16V |
| C517 | 1-115-467-11 | CERAMIC CHIP | 0.22uF | 10% | 10V |
| C518 | 1-162-964-11 | CERAMIC CHIP | 0.001uF | 10% | 50V |
| C519 | 1-107-826-11 | CERAMIC CHIP | 0.1uF | 10% | 16V |
| C520 | 1-162-970-11 | CERAMIC CHIP | 0.01uF | 10% | 25V |
| C521 | 1-162-970-11 | CERAMIC CHIP | 0.01uF | 10% | 25V |
| C522 | 1-107-826-11 | CERAMIC CHIP | 0.1uF | 10% | 16V |
| C523 | 1-115-467-11 | CERAMIC CHIP | 0.22uF | 10% | 10V |
| C524 | 1-162-962-11 | CERAMIC CHIP | 470PF | 10% | 50V |
| C525 | 1-162-970-11 | CERAMIC CHIP | 0.01uF | 10% | 25V |
| C526 | 1-107-826-11 | CERAMIC CHIP | 0.1uF | 10% | 16V |
| C527 | 1-107-826-11 | CERAMIC CHIP | 0.1uF | 10% | 16V |
| C528 | 1-109-982-11 | CERAMIC CHIP | 1uF | 10% | 10V |
| C529 | 1-107-826-11 | CERAMIC CHIP | 0.1uF | 10% | 16V |
| C530 | 1-107-826-11 | CERAMIC CHIP | 0.1uF | 10% | 16V |
| C531 | 1-104-847-11 | TANTAL. CHIP | 22uF | 20% | 4V |
| C532 | 1-162-917-11 | CERAMIC CHIP | 15PF | 5% | 50V |
| | | | | | (EXCEPT TRV3E/TRV13E/TRV23E) |
| C533 | 1-162-917-11 | CERAMIC CHIP | 15PF | 5% | 50V |
| | | | | | (EXCEPT TRV3E/TRV13E/TRV23E) |
| C552 | 1-162-968-11 | CERAMIC CHIP | 0.0047uF | 10% | 50V |

| Ref. No. | Part No. | Description | | | Remark |
|---|---|---|---|---|---|
| C553 | 1-162-970-11 | CERAMIC CHIP | 0.01uF | 10% | 25V |
| C554 | 1-162-970-11 | CERAMIC CHIP | 0.01uF | 10% | 25V |
| C555 | 1-107-826-11 | CERAMIC CHIP | 0.1uF | 10% | 16V |
| C556 | 1-162-970-11 | CERAMIC CHIP | 0.01uF | 10% | 25V |
| C557 | 1-162-962-11 | CERAMIC CHIP | 470PF | 10% | 50V |
| C558 | 1-115-467-11 | CERAMIC CHIP | 0.22uF | 10% | 10V |
| C559 | 1-162-970-11 | CERAMIC CHIP | 0.01uF | 10% | 25V |
| C560 | 1-164-156-11 | CERAMIC CHIP | 0.1uF | | 25V |
| C561 | 1-162-970-11 | CERAMIC CHIP | 0.01uF | 10% | 25V |
| C562 | 1-162-966-11 | CERAMIC CHIP | 0.0022uF | 10% | 50V |
| C563 | 1-162-970-11 | CERAMIC CHIP | 0.01uF | 10% | 25V |
| C564 | 1-104-752-11 | TANTAL. CHIP | 33uF | 20% | 6.3V |
| C565 | 1-164-156-11 | CERAMIC CHIP | 0.1uF | | 25V |
| C566 | 1-115-156-11 | CERAMIC CHIP | 1uF | | 10V |
| C567 | 1-162-964-11 | CERAMIC CHIP | 0.001uF | 10% | 50V |
| C569 | 1-164-004-11 | CERAMIC CHIP | 0.1uF | 10% | 25V |
| C570 | 1-162-970-11 | CERAMIC CHIP | 0.01uF | 10% | 25V |
| C571 | 1-104-851-11 | TANTAL. CHIP | 10uF | 20% | 10V |
| C572 | 1-104-851-11 | TANTAL. CHIP | 10uF | 20% | 10V |
| C605 | 1-135-091-00 | TANTALUM CHIP | 1uF | 20% | 16V |
| C607 | 1-164-156-11 | CERAMIC CHIP | 0.1uF | | 25V |
| C610 | 1-164-156-11 | CERAMIC CHIP | 0.1uF | | 25V |
| C611 | 1-164-156-11 | CERAMIC CHIP | 0.1uF | | 25V |
| C612 | 1-119-749-11 | TANTAL. CHIP | 33uF | 20% | 4V |
| C613 | 1-104-851-11 | TANTAL. CHIP | 10uF | 20% | 10V |
| C615 | 1-164-156-11 | CERAMIC CHIP | 0.1uF | | 25V |
| C616 | 1-164-156-11 | CERAMIC CHIP | 0.1uF | | 25V |
| C617 | 1-162-970-11 | CERAMIC CHIP | 0.01uF | 10% | 25V |
| C618 | 1-162-970-11 | CERAMIC CHIP | 0.01uF | 10% | 25V |
| C619 | 1-162-970-11 | CERAMIC CHIP | 0.01uF | 10% | 25V |
| C620 | 1-162-970-11 | CERAMIC CHIP | 0.01uF | 10% | 25V |
| C621 | 1-162-970-11 | CERAMIC CHIP | 0.01uF | 10% | 25V |
| C622 | 1-162-970-11 | CERAMIC CHIP | 0.01uF | 10% | 25V |
| C623 | 1-162-970-11 | CERAMIC CHIP | 0.01uF | 10% | 25V |
| C624 | 1-162-970-11 | CERAMIC CHIP | 0.01uF | 10% | 25V |
| C625 | 1-164-156-11 | CERAMIC CHIP | 0.1uF | | 25V |
| C626 | 1-164-156-11 | CERAMIC CHIP | 0.1uF | | 25V |
| C627 | 1-164-227-11 | CERAMIC CHIP | 0.022uF | 10% | 25V |
| C628 | 1-162-919-11 | CERAMIC CHIP | 22PF | 5% | 50V |
| C629 | 1-162-917-11 | CERAMIC CHIP | 15PF | 5% | 50V |
| C630 | 1-164-156-11 | CERAMIC CHIP | 0.1uF | | 25V |
| C634 | 1-164-156-11 | CERAMIC CHIP | 0.1uF | | 25V |
| | | | (EXCEPT TRV3E/TRV13E/TRV23E) | | |
| C636 | 1-164-156-11 | CERAMIC CHIP | 0.1uF | | 25V |
| C637 | 1-162-969-11 | CERAMIC CHIP | 0.0068uF | 10% | 25V |
| C702 | 1-115-156-11 | CERAMIC CHIP | 1uF | 10% | 10V (TRV69E) |
| C703 | 1-162-970-11 | CERAMIC CHIP | 0.01uF | 10% | 25V (TRV69E) |
| C704 | 1-162-924-11 | CERAMIC CHIP | 56PF | 5% | 50V (TRV69E) |
| C705 | 1-162-970-11 | CERAMIC CHIP | 0.01uF | 10% | 25V (TRV69E) |
| C706 | 1-162-923-11 | CERAMIC CHIP | 47pF | 5% | 50V (TRV69E) |
| C707 | 1-162-915-11 | CERAMIC CHIP | 10pF | 0.5pF | 50V (TRV69E) |
| C708 | 1-162-925-11 | CERAMIC CHIP | 68PF | 5% | 50V (TRV69E) |
| C709 | 1-164-156-11 | CERAMIC CHIP | 0.1uF | | 25V (TRV69E) |

| Ref. No. | Part No. | Description | | | Remark |
|---|---|---|---|---|---|
| C710 | 1-135-201-11 | TANTAL CHIP | 10MF | 20% | 4V (TRV69E) |
| C711 | 1-162-970-11 | CERAMIC CHIP | 0.01uF | 10% | 25V (TRV69E) |
| C712 | 1-162-970-11 | CERAMIC CHIP | 0.01uF | 10% | 25V (TRV69E) |
| C713 | 1-164-004-11 | CERAMIC CHIP | 0.1MF | 10% | 25V (TRV69E) |
| C714 | 1-162-964-11 | CERAMIC CHIP | 0.001uF | 10% | 25V (TRV69E) |
| C715 | 1-164-156-11 | CERAMIC CHIP | 0.1uF | | 25V (TRV69E) |
| C716 | 1-164-156-11 | CERAMIC CHIP | 0.1uF | | 25V (TRV69E) |
| C751 | 1-135-201-11 | TANTALUM CHIP | 10uF | 20% | 4V (TRV75/TRV75PK/TRV715) |
| C752 | 1-135-259-11 | TANTAL. CHIP | 10uF | 20% | 6.3V (TRV75/TRV75PK/TRV715) |
| C753 | 1-162-970-11 | CERAMIC CHIP | 0.01uF | 10% | 25V (TRV75/TRV75PK/TRV715) |
| C754 | 1-107-823-11 | CERAMIC CHIP | 0.47uF | 10% | 16V (TRV75/TRV75PK/TRV715) |
| C755 | 1-107-823-11 | CERAMIC CHIP | 0.47uF | 10% | 16V (TRV75/TRV75PK/TRV715) |
| C756 | 1-162-970-11 | CERAMIC CHIP | 0.01uF | 10% | 25V (TRV75/TRV75PK/TRV715) |
| C757 | 1-135-201-11 | TANTALUM CHIP | 10uF | 20% | 4V (TRV75/TRV75PK/TRV715) |
| C758 | 1-109-982-11 | CERAMIC CHIP | 1uF | 10% | 10V (TRV75/TRV75PK/TRV715) |
| C759 | 1-162-970-11 | CERAMIC CHIP | 0.01uF | 10% | 25V (TRV75/TRV75PK/TRV715) |
| C760 | 1-135-181-21 | TANTALUM CHIP | 4.7uF | 20% | 6.3V (TRV75/TRV75PK/TRV715) |
| C761 | 1-162-970-11 | CERAMIC CHIP | 0.01uF | 10% | 25V (TRV75/TRV75PK/TRV715) |
| C762 | 1-164-668-11 | CERAMIC CHIP | 510PF | 5% | 50V (TRV75/TRV75PK/TRV715) |
| C763 | 1-162-970-11 | CERAMIC CHIP | 0.01uF | 10% | 25V (TRV75/TRV75PK/TRV715) |
| C764 | 1-135-259-11 | TANTAL. CHIP | 10uF | 20% | 6.3V (TRV75/TRV75PK/TRV715) |
| C765 | 1-162-970-11 | CERAMIC CHIP | 0.01uF | 10% | 25V (TRV75/TRV75PK/TRV715) |
| C766 | 1-109-982-11 | CERAMIC CHIP | 1uF | 10% | 10V (TRV75/TRV75PK/TRV715) |
| C767 | 1-107-826-11 | CERAMIC CHIP | 0.1uF | 10% | 16V (TRV75/TRV75PK/TRV715) |
| C768 | 1-162-909-11 | CERAMIC CHIP | 4PF | 0.25PF | 50V (TRV75/TRV75PK/TRV715) |
| C769 | 1-107-823-11 | CERAMIC CHIP | 0.47uF | 10% | 16V (TRV75/TRV75PK/TRV715) |
| C770 | 1-107-823-11 | CERAMIC CHIP | 0.47uF | 10% | 16V (TRV75/TRV75PK/TRV715) |
| C771 | 1-162-921-11 | CERAMIC CHIP | 33PF | 5% | 50V (TRV75/TRV75PK/TRV715) |
| C772 | 1-109-982-11 | CERAMIC CHIP | 1uF | 10% | 10V (TRV75/TRV75PK/TRV715) |
| C773 | 1-162-922-11 | CERAMIC CHIP | 39PF | 5% | 50V (TRV75/TRV75PK/TRV715) |
| C774 | 1-109-982-11 | CERAMIC CHIP | 1uF | 10% | 10V (TRV75/TRV75PK/TRV715) |
| C775 | 1-107-826-11 | CERAMIC CHIP | 0.1uF | 10% | 16V (TRV75/TRV75PK/TRV715) |

| Ref. No. | Part No. | Description | Remark |
|---|---|---|---|
| C776 | 1-162-970-11 | CERAMIC CHIP 0.01uF 10% 25V | (TRV75/TRV75PK/TRV715) |
| C777 | 1-162-970-11 | CERAMIC CHIP 0.01uF 10% 25V | (TRV75/TRV75PK/TRV715) |
| C778 | 1-162-970-11 | CERAMIC CHIP 0.01uF 10% 25V | (TRV75/TRV75PK/TRV715) |
| C781 | 1-104-847-11 | TANTAL. CHIP 22uF 20% 4V | (TRV75/TRV75PK/TRV715) |
| | | < CONNECTOR > | |
| CN001 | 1-766-677-21 | CONNECTOR, FFC/FPC 16P | |
| CN501 | 1-779-332-11 | CONNECTOR, FFC/FPC 16P | |
| CN551 | 1-766-353-21 | CONNECTOR, FFC/FPC 23P | (TRV3E/TRV13E/TRV23E/TRV45E/TRV55E/TRV65E/TRV69E) |
| CN901 | 1-766-644-21 | CONNECTOR, FFC/FPC 8P | |
| CN902 | 1-766-673-21 | CONNECTOR, FFC/FPC 12P | |
| CN903 | 1-766-353-21 | CONNECTOR, FFC/FPC 23P | |
| CN904 | 1-691-374-11 | CONNECTOR, FFC/FPC 10P | |
| CN905 | 1-766-646-21 | CONNECTOR, FFC/FPC 10P | |
| CN906 | 1-766-673-21 | CONNECTOR, FFC/FPC 12P | |
| CN907 | 1-766-346-21 | CONNECTOR, FFC/FPC 16P | |
| CN908 | 1-766-345-21 | CONNECTOR, FFC/FPC 15P | |
| CN909 | 1-766-621-21 | CONNECTOR, FFC/FPC 10P | (EXCEPT TRV3E/TRV13E/TRV23E) |
| CN910 | 1-766-346-21 | CONNECTOR, FFC/FPC 16P | |
| CN911 | 1-778-637-21 | CONNECTOR, FFC/FPC (ZIF) 50P | |
| CN912 | 1-766-677-21 | CONNECTOR, FFC/FPC 16P | |
| CN914 | 1-691-542-21 | CONNECTOR, BOARD TO BOARD 48P | |
| | | < DIODE > | |
| D002 | 8-719-404-49 | DIODE MA111-TX | (TRV65E/TRV69E/TRV75/TRV75PK/TRV715) |
| D201 | 8-719-055-86 | DIODE KV1470TL1-3 | |
| D202 | 8-719-055-86 | DIODE KV1470TL1-3 | |
| D371 | 8-719-404-49 | DIODE MA111-TX | |
| D502 | 8-713-102-28 | DIODE 1T379-04-T8A | |
| D551 | 8-719-404-49 | DIODE MA111-TX | |
| D601 | 8-719-421-27 | DIODE MA728-TX | |
| D602 | 8-719-421-27 | DIODE MA728-TX | |
| D604 | 8-719-404-49 | DIODE MA111-TX | |
| D608 | 8-719-404-49 | DIODE MA111-TX | |
| D609 | 8-719-049-09 | DIODE 1SS367-T3SONY | |
| D610 | 8-719-421-27 | DIODE MA728-TX | |
| D910 | 8-719-059-57 | DIODE MAZJ082DFLSO | (EXCEPT TRV3E/TRV13E/TRV23E) |
| D911 | 8-719-420-14 | DIODE MA8082-TX | (EXCEPT TRV3E/TRV13E/TRV23E) |
| | | < FERRITE BEAD > | |
| FB001 | 1-414-229-11 | INDUCTOR CHIP 0UH | |
| FB002 | 1-414-229-11 | INDUCTOR CHIP 0UH | |
| FB003 | 1-414-229-11 | INDUCTOR CHIP 0UH | |
| FB004 | 1-414-229-11 | INDUCTOR CHIP 0UH | |
| FB151 | 1-414-228-11 | INDUCTOR CHIP 0UH | |
| FB152 | 1-414-921-11 | INDUCTOR CHIP 0UH | |
| FB201 | 1-414-228-11 | INDUCTOR CHIP 0UH | |
| FB202 | 1-414-228-11 | INDUCTOR CHIP 0UH | |
| FB203 | 1-414-228-11 | INDUCTOR CHIP 0UH | |
| FB204 | 1-414-228-11 | INDUCTOR CHIP 0UH | (TRV55E/TRV65E/TRV75/TRV75PK/TRV715) |
| FB205 | 1-414-228-11 | INDUCTOR CHIP 0UH | (TRV55E/TRV65E/TRV75/TRV75PK/TRV715) |
| FB206 | 1-414-228-11 | INDUCTOR CHIP 0UH | |
| FB501 | 1-414-228-11 | INDUCTOR CHIP 0UH | |
| FB503 | 1-500-284-21 | INDUCTOR CHIP 0UH | |
| FB504 | 1-500-284-21 | INDUCTOR CHIP 0UH | |
| FB505 | 1-500-284-21 | INDUCTOR CHIP 0UH | (TRV3E/TRV13E/TRV23E) |
| FB506 | 1-414-228-11 | INDUCTOR CHIP 0UH | |
| FB701 | 1-414-228-11 | INDUCTOR CHIP 0UH (TRV69E) | |
| FB702 | 1-414-921-11 | INDUCTOR CHIP 0UH (TRV69E) | |
| | | < IC > | |
| IC001 | 8-752-079-46 | IC CXA2084R-T6 | |
| IC151 | 8-752-078-82 | IC CXA2030R-T6 | |
| IC152 | 8-759-169-02 | IC MB88344BPFV-G-BND-ER | |
| IC201 | 8-759-494-73 | IC MB90097PFV-G-104-ER | |
| IC202 | 8-759-494-55 | IC MB87F126DPFF-G-BND | |
| IC204 | 8-752-389-54 | IC CXD3124R-T6 | (TRV65E/TRV69E/TRV75/TRV75PK/TRV715) |
| IC204 | 8-752-390-53 | IC CXD3131R-T6 (TRV55E) | |
| IC301 | 8-759-494-29 | IC AN2982FH-EB | (EXCEPT TRV3E/TRV13E/TRV23E) |
| IC301 | 8-759-494-30 | IC AN2984FH-EB | (TRV3E/TRV13E/TRV23E) |
| IC371 | 8-759-494-52 | IC BA7783FS-E2 | |
| IC401 | 8-759-445-94 | IC AK6480AM-E2 | |
| IC402 | 8-759-529-57 | IC MB91191PFF-G-108-BND | |
| IC451 | 8-759-327-67 | IC LB1950V-TLM | |
| IC452 | 8-759-327-62 | IC TA8482FN-EL | (EXCEPT TRV75/TRV75PK/TRV715) |
| IC452 | 8-759-327-61 | IC LB8112V-TLM (TRV75/TRV75PK/TRV715) | |
| IC501 | 8-752-384-70 | IC CXD2486R-T4 | |
| IC502 | 8-759-462-43 | IC AD9800JCSTRL | |
| IC551 | 8-759-444-87 | IC NJM324V(TE2) | |
| IC552 | 8-759-475-79 | IC uPD16833AG3-E2 | (EXCEPT TRV75/TRV75PK/TRV715) |
| IC552 | 8-759-351-46 | IC MPC17A34RVMEL | (TRV75/TRV75PK/TRV715) |
| IC602 | 8-759-424-79 | IC S-8423YFS-T2 | |
| IC603 | 8-759-059-05 | IC TL1596CPW-ELM1000 | |
| IC604 | 8-759-532-17 | IC S579214PZ-TEB | |
| IC701 | 8-759-421-52 | IC MB87B110CPFV-G-BND-ER (TRV69E) | |
| IC751 | 8-759-498-52 | IC LA9511W-TBM (TRV75/TRV75PK/TRV715) | |
| | | < COIL > | |
| L001 | 1-414-406-11 | INDUCTOR 220uH | |
| L002 | 1-412-952-11 | INDUCTOR 12uH | |
| L003 | 1-414-406-11 | INDUCTOR 220uH | |
| L004 | 1-414-754-11 | INDUCTOR 10uH | |
| L005 | 1-412-948-11 | INDUCTOR 5.6uH | |
| L006 | 1-412-963-11 | INDUCTOR 100uH | |
| L008 | 1-412-280-31 | INDUCTOR 330uH | |
| L009 | 1-410-656-11 | INDUCTOR CHIP 150uH | |
| L010 | 1-410-657-21 | INDUCTOR CHIP 180uH | |
| L011 | 1-412-956-21 | INDUCTOR 27uH | (TRV65E/TRV69E/TRV75/TRV75PK/TRV715) |
| L012 | 1-412-955-11 | INDUCTOR 22uH | |
| L013 | 1-412-944-11 | INDUCTOR 2.7uH | |
| L015 | 1-412-951-11 | INDUCTOR 10uH | |
| L016 | 1-412-946-11 | INDUCTOR 3.9uH | |
| L017 | 1-414-754-11 | INDUCTOR 10uH | |

| Ref. No. | Part No. | Description | Remark |
|---|---|---|---|
| L018 | 1-410-656-11 | INDUCTOR CHIP 150uH | |
| L019 | 1-412-957-11 | INDUCTOR 33uH | |
| L152 | 1-412-937-11 | INDUCTOR 0.68uH | (TRV45E/TRV55E/TRV65E/TRV69E) |
| L152 | 1-412-939-11 | INDUCTOR 1uH | (TRV75/TRV75PK/TRV715) |
| L153 | 1-414-754-11 | INDUCTOR 10uH | |
| L154 | 1-414-754-11 | INDUCTOR 10uH | |
| L155 | 1-414-754-11 | INDUCTOR 10uH | |
| L156 | 1-414-754-11 | INDUCTOR 10uH | |
| L201 | 1-414-754-11 | INDUCTOR 10uH | |
| L202 | 1-414-754-11 | INDUCTOR 10uH | |
| L203 | 1-414-754-11 | INDUCTOR 10uH | |
| L204 | 1-410-658-31 | INDUCTOR CHIP 220uH | |
| L205 | 1-412-955-11 | INDUCTOR 22uH | (TRV65E/TRV69E/TRV75/TRV75PK/TRV715) |
| L205 | 1-412-957-11 | INDUCTOR 33uH | (TRV3E/TRV13E/TRV23E/TRV45E/TRV55E) |
| L206 | 1-412-945-11 | INDUCTOR 3.3uH | |
| L207 | 1-414-754-11 | INDUCTOR 10uH | |
| L209 | 1-414-754-11 | INDUCTOR 10uH | |
| L402 | 1-414-754-11 | INDUCTOR 10uH | |
| L501 | 1-414-398-11 | INDUCTOR 10uH | |
| L502 | 1-216-295-91 | SHORT 0 (TRV3E/TRV13E/TRV23E) | |
| L502 | 1-412-955-11 | INDUCTOR 22uH | (EXCEPT TRV3E/TRV13E/TRV23E) |
| L552 | 1-414-398-11 | INDUCTOR 10uH | |
| L553 | 1-414-754-11 | INDUCTOR 10uH | |
| L555 | 1-414-754-11 | INDUCTOR 10uH | |
| L602 | 1-414-754-11 | INDUCTOR 10uH | |
| L701 | 1-414-754-11 | INDUCTOR 10uH (TRV69E) | |
| L702 | 1-412-950-11 | INDUCTOR 8.2uH (TRV69E) | |
| L704 | 1-410-658-31 | INDUCTOR CHIP 220uH (TRV69E) | |
| L751 | 1-412-948-11 | INDUCTOR 5.6uH | (TRV75/TRV75PK/TRV715) |
| L752 | 1-412-957-11 | INDUCTOR 33uH | (TRV75/TRV75PK/TRV715) |
| L753 | 1-412-957-11 | INDUCTOR 33uH | (TRV75/TRV75PK/TRV715) |
| | | < TRANSISTOR > | |
| Q001 | 8-729-031-69 | TRANSISTOR 2SA1965-TL | |
| Q002 | 8-729-037-53 | TRANSISTOR 2SA1832F-Y/GR(TPL3) | |
| Q003 | 8-729-037-53 | TRANSISTOR 2SA1832F-Y/GR(TPL3) | |
| Q004 | 8-729-031-69 | TRANSISTOR 2SA1965-TL | (TRV75/TRV75PK/TRV715) |
| Q005 | 8-729-031-69 | TRANSISTOR 2SA1965-TL | (TRV75/TRV75PK/TRV715) |
| Q006 | 8-729-031-69 | TRANSISTOR 2SA1965-TL | (TRV75/TRV75PK/TRV715) |
| Q007 | 8-729-031-69 | TRANSISTOR 2SA1965-TL | (TRV75/TRV75PK/TRV715) |
| Q008 | 8-729-037-74 | TRANSISTOR UN9213J-(K8).SO | (TRV75/TRV75PK/TRV715) |
| Q009 | 8-729-037-74 | TRANSISTOR UN9213J-(K8).SO | (TRV75/TRV75PK/TRV715) |
| Q010 | 8-729-037-74 | TRANSISTOR UN9213J-(K8).SO | (TRV75/TRV75PK/TRV715) |
| Q011 | 8-729-037-74 | TRANSISTOR UN9213J-(K8).SO | (TRV75/TRV75PK/TRV715) |
| Q012 | 8-729-037-52 | TRANSISTOR 2SC4738F-Y/GR(TPL3) | |
| Q017 | 8-729-037-52 | TRANSISTOR 2SC4738F-Y/GR(TPL3) | |
| Q018 | 8-729-037-52 | TRANSISTOR 2SC4738F-Y/GR(TPL3) (TRV69E) | |
| Q019 | 8-729-037-74 | TRANSISTOR UN9213J-(K8).SO | |
| Q020 | 8-729-037-52 | TRANSISTOR 2SC4738F-Y/GR(TPL3) | |
| Q021 | 8-729-037-52 | TRANSISTOR 2SC4738F-Y/GR(TPL3) | |
| Q022 | 8-729-037-52 | TRANSISTOR 2SC4738F-Y/GR(TPL3) | (TRV65E/TRV69E/TRV75/TRV75PK/TRV715) |
| Q023 | 8-729-037-52 | TRANSISTOR 2SC4738F-Y/GR(TPL3) | |
| Q024 | 8-729-037-52 | TRANSISTOR 2SC4738F-Y/GR(TPL3) | |
| Q025 | 8-729-037-89 | TRANSISTOR 2SC4627J-C(K8).S0 | (TRV65E/TRV69E/TRV75/TRV75PK/TRV715) |
| Q026 | 8-729-031-69 | TRANSISTOR 2SA1965-TL | (TRV75/TRV75PK/TRV715) |
| Q027 | 8-729-037-53 | TRANSISTOR 2SA1832F-Y/GR(TPL3) | |
| Q028 | 8-729-037-74 | TRANSISTOR UN9213J-(K8).SO | |
| Q029 | 8-729-037-53 | TRANSISTOR 2SA1832F-Y/GR(TPL3) | |
| Q030 | 8-729-037-53 | TRANSISTOR 2SA1832F-Y/GR(TPL3) | (TRV65E/TRV69E/TRV75/TRV75PK/TRV715) |
| Q032 | 8-729-037-53 | TRANSISTOR 2SA1832F-Y/GR(TPL3) | |
| Q033 | 8-729-031-69 | TRANSISTOR 2SA1965-TL | |
| Q034 | 8-729-037-53 | TRANSISTOR 2SA1832F-Y/GR(TPL3) | |
| Q036 | 8-729-037-89 | TRANSISTOR 2SC4627J-C(K8).S0 | |
| Q038 | 8-729-037-74 | TRANSISTOR UN9213J-(K8).SO | |
| Q039 | 8-729-037-52 | TRANSISTOR 2SC4738F-Y/GR(TPL3) | |
| Q040 | 8-729-037-74 | TRANSISTOR UN9213J-(K8).SO | |
| Q041 | 8-729-230-72 | TRANSISTOR 2SA1362-YG-EL | |
| Q042 | 8-729-037-74 | TRANSISTOR UN9213J-(K8).SO | |
| Q043 | 8-729-031-69 | TRANSISTOR 2SA1965-TL | (TRV65E/TRV69E/TRV75/TRV75PK/TRV715) |
| Q044 | 8-729-037-74 | TRANSISTOR UN9213J-(K8).SO | (TRV65E/TRV69E/TRV75/TRV75PK/TRV715) |
| Q151 | 8-729-037-61 | TRANSISTOR RN2104F(TPL3) | |
| Q153 | 8-729-040-77 | TRANSISTOR 2SC5376-B(TE85L) | |
| Q154 | 8-729-040-77 | TRANSISTOR 2SC5376-B(TE85L) | (TRV65E/TRV69E/TRV75/TRV75PK/TRV715) |
| Q156 | 8-729-040-77 | TRANSISTOR 2SC5376-B(TE85L) | (TRV65E/TRV69E/TRV75/TRV75PK/TRV715) |
| Q202 | 8-729-037-52 | TRANSISTOR 2SC4738F-Y/GR(TPL3) | |
| Q203 | 8-729-037-53 | TRANSISTOR 2SA1832F-Y/GR(TPL3) | |
| Q204 | 8-729-037-52 | TRANSISTOR 2SC4738F-Y/GR(TPL3) | |
| Q205 | 8-729-037-74 | TRANSISTOR UN9213J-(K8).SO | |
| Q208 | 8-729-037-74 | TRANSISTOR UN9213J-(K8).SO | (TRV65E/TRV69E/TRV75/TRV75PK/TRV715) |
| Q213 | 8-729-037-52 | TRANSISTOR 2SC4738F-Y/GR(TPL3) | |
| Q214 | 8-729-037-52 | TRANSISTOR 2SC4738F-Y/GR(TPL3) | |
| Q215 | 8-729-037-52 | TRANSISTOR 2SC4738F-Y/GR(TPL3) | |
| Q217 | 8-729-037-53 | TRANSISTOR 2SA1832F-Y/GR(TPL3) | |
| Q301 | 8-729-042-74 | TRANSISTOR UN9216J-(K8).SO | (EXCEPT TRV3E/TRV13E/TRV23E) |
| Q302 | 8-729-042-74 | TRANSISTOR UN9216J-(K8).SO | |
| Q305 | 8-729-037-63 | TRANSISTOR UN9115J-(K8).SO | |
| Q306 | 8-729-037-76 | TRANSISTOR UN9215J-(K8).SO | |
| Q307 | 8-729-037-76 | TRANSISTOR UN9215J-(K8).SO | (EXCEPT TRV3E/TRV13E/TRV23E) |
| Q308 | 8-729-037-61 | TRANSISTOR RN2104F(TPL3) | |
| Q309 | 8-729-037-74 | TRANSISTOR UN9213J-(K8).SO | |
| Q310 | 8-729-037-74 | TRANSISTOR UN9213J-(K8).SO | (TRV75/TRV75PK/TRV715) |
| Q371 | 8-729-042-74 | TRANSISTOR UN9216J-(K8).SO | |
| Q372 | 8-729-042-74 | TRANSISTOR UN9216J-(K8).SO | (EXCEPT TRV3E/TRV13E/TRV23E) |

| Ref. No. | Part No. | Description | Remark |
|---|---|---|---|
| Q452 | 8-729-037-74 | TRANSISTOR UN9213J-(K8).SO | |
| Q453 | 8-729-037-74 | TRANSISTOR UN9213J-(K8).SO | |
| Q454 | 8-729-037-53 | TRANSISTOR 2SA1832F-Y/GR(TPL3) | |
| Q455 | 8-729-037-53 | TRANSISTOR 2SA1832F-Y/GR(TPL3) | |
| Q456 | 8-729-037-52 | TRANSISTOR 2SC4738F-Y/GR(TPL3) | |
| Q501 | 8-729-037-53 | TRANSISTOR 2SA1832F-Y/GR(TPL3) | |
| Q551 | 8-729-037-53 | TRANSISTOR 2SA1832F-Y/GR(TPL3) | |
| Q552 | 8-729-037-52 | TRANSISTOR 2SC4738F-Y/GR(TPL3) | |
| Q553 | 8-729-037-52 | TRANSISTOR 2SC4738F-Y/GR(TPL3) | |
| Q607 | 8-729-041-43 | TRANSISTOR HN1L02FU(TE85R) | |
| Q608 | 8-729-037-52 | TRANSISTOR 2SC4738F-Y/GR(TPL3) | |
| Q609 | 8-729-037-52 | TRANSISTOR 2SC4738F-Y/GR(TPL3) | (TRV75/TRV75PK/TRV715) |
| Q610 | 8-729-037-74 | TRANSISTOR UN9213J-(K8).SO | |
| Q611 | 8-729-037-74 | TRANSISTOR UN9213J-(K8).SO | (TRV75/TRV75PK/TRV715) |
| Q619 | 8-729-037-53 | TRANSISTOR 2SA1832F-Y/GR(TPL3) | (EXCEPT TRV3E/TRV13E/TRV23E) |
| Q620 | 8-729-042-58 | TRANSISTOR UN9111J-(K8).SO | |
| Q701 | 8-729-037-52 | TRANSISTOR 2SC4738F-Y/GR(TPL3) (TRV69E) | |
| Q702 | 8-729-037-52 | TRANSISTOR 2SC4738F-Y/GR(TPL3) (TRV69E) | |
| Q703 | 8-729-037-52 | TRANSISTOR 2SC4738F-Y/GR(TPL3) (TRV69E) | |
| Q704 | 8-729-037-61 | TRANSISTOR RN2104(TPL3) (TRV69E) | |
| Q705 | 8-729-037-52 | TRANSISTOR 2SC4738F-Y/GR(TPL3) (TRV69E) | |
| | | < RESISTOR > | |
| R001 | 1-216-864-11 | METAL CHIP 0 5% 1/16W | (EXCEPT TRV75/TRV75PK/TRV715) |
| R002 | 1-216-864-11 | METAL CHIP 0 5% 1/16W | (EXCEPT TRV75/TRV75PK/TRV715) |
| R003 | 1-216-806-11 | RES,CHIP 56 5% 1/16W | |
| R004 | 1-216-818-11 | METAL CHIP 560 5% 1/16W | |
| R005 | 1-216-809-11 | METAL CHIP 100 5% 1/16W | |
| R006 | 1-216-825-11 | METAL CHIP 2.2K 5% 1/16W | |
| R007 | 1-216-829-11 | METAL CHIP 4.7K 5% 1/16W | |
| R008 | 1-216-814-11 | METAL CHIP 270 5% 1/16W | |
| R009 | 1-216-813-11 | METAL CHIP 220 5% 1/16W | |
| R010 | 1-216-828-11 | METAL CHIP 3.9K 5% 1/16W | (TRV75/TRV75PK/TRV715) |
| R011 | 1-216-828-11 | METAL CHIP 3.9K 5% 1/16W | (TRV75/TRV75PK/TRV715) |
| R012 | 1-216-828-11 | METAL CHIP 3.9K 5% 1/16W | (TRV75/TRV75PK/TRV715) |
| R013 | 1-216-828-11 | METAL CHIP 3.9K 5% 1/16W | (TRV75/TRV75PK/TRV715) |
| R014 | 1-216-837-11 | METAL CHIP 22K 5% 1/16W | |
| R015 | 1-216-839-11 | METAL CHIP 33K 5% 1/16W | |
| R016 | 1-216-829-11 | METAL CHIP 4.7K 5% 1/16W | (TRV75/TRV75PK/TRV715) |
| R017 | 1-216-829-11 | METAL CHIP 4.7K 5% 1/16W | (TRV75/TRV75PK/TRV715) |
| R018 | 1-216-829-11 | METAL CHIP 4.7K 5% 1/16W | (TRV75/TRV75PK/TRV715) |
| R019 | 1-216-829-11 | METAL CHIP 4.7K 5% 1/16W | (TRV75/TRV75PK/TRV715) |
| R020 | 1-216-837-11 | METAL CHIP 22K 5% 1/16W | |
| R021 | 1-216-837-11 | METAL CHIP 22K 5% 1/16W | |
| R023 | 1-216-837-11 | METAL CHIP 22K 5% 1/16W | |
| R025 | 1-216-837-11 | METAL CHIP 22K 5% 1/16W | |
| R026 | 1-216-816-11 | METAL CHIP 390 5% 1/16W | |
| R027 | 1-216-816-11 | METAL CHIP 390 5% 1/16W | |

| Ref. No. | Part No. | Description | Remark |
|---|---|---|---|
| R029 | 1-216-837-11 | METAL CHIP 22K 5% 1/16W | |
| R031 | 1-216-837-11 | METAL CHIP 22K 5% 1/16W | |
| R032 | 1-216-816-11 | METAL CHIP 390 5% 1/16W | |
| R033 | 1-216-816-11 | METAL CHIP 390 5% 1/16W | |
| R034 | 1-216-864-11 | METAL CHIP 0 5% 1/16W | (EXCEPT TRV69E) |
| R035 | 1-216-841-11 | METAL CHIP 47K 5% 1/16W | |
| R037 | 1-216-824-11 | METAL CHIP 1.8K 5% 1/16W | |
| R038 | 1-216-841-11 | METAL CHIP 47K 5% 1/16W | |
| R039 | 1-216-824-11 | METAL CHIP 1.8K 5% 1/16W | |
| R040 | 1-216-864-11 | METAL CHIP 0 5% 1/16W | |
| R043 | 1-216-833-11 | METAL CHIP 10K 5% 1/16W | (TRV65E/TRV69E/TRV75/TRV75PK/TRV715) |
| R045 | 1-216-845-11 | METAL CHIP 100K 5% 1/16W | |
| R046 | 1-216-821-11 | METAL CHIP 1K 5% 1/16W | |
| R047 | 1-216-864-11 | METAL CHIP 0 5% 1/16W | (EXCEPT TRV69E) |
| R048 | 1-216-864-11 | METAL CHIP 0 5% 1/16W | (EXCEPT TRV69E) |
| R049 | 1-216-833-11 | METAL CHIP 10K 5% 1/16W | |
| R050 | 1-216-837-11 | METAL CHIP 22K 5% 1/16W | |
| R051 | 1-216-825-11 | METAL CHIP 2.2K 5% 1/16W | |
| R052 | 1-216-833-11 | METAL CHIP 10K 5% 1/16W | |
| R055 | 1-216-830-11 | METAL CHIP 5.6K 5% 1/16W | (EXCEPT TRV75/TRV75PK/TRV715) |
| R055 | 1-216-829-11 | METAL CHIP 4.7K 5% 1/16W | (TRV75/TRV75PK/TRV715) |
| R056 | 1-216-855-11 | METAL CHIP 680K 5% 1/16W | |
| R057 | 1-216-819-11 | METAL CHIP 680 5% 1/16W | (TRV65E/TRV69E/TRV75/TRV75PK/TRV715) |
| R057 | 1-216-864-11 | METAL CHIP 0 5% 1/16W | (TRV3E/TRV13E/TRV23E/TRV45E/TRV55E) |
| R058 | 1-216-853-11 | METAL CHIP 470K 5% 1/16W | |
| R059 | 1-216-821-11 | METAL CHIP 1K 5% 1/16W | |
| R060 | 1-216-837-11 | METAL CHIP 22K 5% 1/16W | |
| R061 | 1-216-833-11 | METAL CHIP 10K 5% 1/16W | |
| R062 | 1-216-818-11 | METAL CHIP 560 5% 1/16W | |
| R063 | 1-216-817-11 | METAL CHIP 470 5% 1/16W | (TRV65E/TRV69E/TRV75/TRV75PK/TRV715) |
| R063 | 1-216-818-11 | METAL CHIP 560 5% 1/16W | (TRV3E/TRV13E/TRV23E/TRV45E/TRV55E) |
| R064 | 1-216-828-11 | METAL CHIP 3.9K 5% 1/16W | (TRV65E/TRV69E/TRV75/TRV75PK/TRV715) |
| R064 | 1-216-864-11 | METAL CHIP 0 5% 1/16W | (TRV3E/TRV13E/TRV23E/TRV45E/TRV55E) |
| R065 | 1-216-833-11 | METAL CHIP 10K 5% 1/16W | (TRV65E/TRV69E/TRV75/TRV75PK/TRV715) |
| R066 | 1-216-823-11 | METAL CHIP 1.5K 5% 1/16W | (EXCEPT TRV75/TRV75PK/TRV715) |
| R066 | 1-216-825-11 | METAL CHIP 2.2K 5% 1/16W | (TRV75/TRV75PK/TRV715) |
| R067 | 1-216-817-11 | METAL CHIP 470 5% 1/16W | |
| R068 | 1-216-817-11 | METAL CHIP 470 5% 1/16W | |
| R069 | 1-216-864-11 | METAL CHIP 0 5% 1/16W | |
| R072 | 1-216-864-11 | METAL CHIP 0 5% 1/16W | |
| R073 | 1-216-821-11 | METAL CHIP 1K 5% 1/16W | |
| R074 | 1-216-816-11 | METAL CHIP 390 5% 1/16W | |
| R075 | 1-216-817-11 | METAL CHIP 470 5% 1/16W | |
| R076 | 1-216-816-11 | METAL CHIP 390 5% 1/16W | |
| R077 | 1-216-814-11 | METAL CHIP 270 5% 1/16W | (TRV3E/TRV13E/TRV23E/TRV45E/TRV55E) |

## VC-195

| Ref. No. | Part No. | Description | | | | Remark |
|---|---|---|---|---|---|---|
| R078 | 1-216-815-11 | METAL CHIP | 330 | 5% | 1/16W | (TRV75/TRV75PK/TRV715) |
| R078 | 1-216-817-11 | METAL CHIP | 470 | 5% | 1/16W | (TRV65E/TRV69E) |
| R079 | 1-216-815-11 | METAL CHIP | 330 | 5% | 1/16W | (TRV75/TRV75PK/TRV715) |
| R079 | 1-216-817-11 | METAL CHIP | 470 | 5% | 1/16W | (TRV65E/TRV69E) |
| R080 | 1-216-813-11 | METAL CHIP | 220 | 5% | 1/16W | (TRV75/TRV75PK/TRV715) |
| R080 | 1-216-821-11 | METAL CHIP | 1K | 5% | 1/16W | (TRV65E/TRV69E) |
| R081 | 1-216-826-11 | METAL CHIP | 2.7K | 5% | 1/16W | |
| R082 | 1-216-822-11 | METAL CHIP | 1.2K | 5% | 1/16W | |
| R083 | 1-216-820-11 | METAL CHIP | 820 | 5% | 1/16W | (TRV75/TRV75PK/TRV715) |
| R083 | 1-216-864-11 | METAL CHIP | 0 | 5% | 1/16W | (TRV65E/TRV69E) |
| R084 | 1-216-833-11 | METAL CHIP | 10K | 5% | 1/16W | (TRV75/TRV75PK/TRV715) |
| R085 | 1-216-833-11 | METAL CHIP | 10K | 5% | 1/16W | |
| R087 | 1-216-821-11 | METAL CHIP | 1K | 5% | 1/16W | (TRV65E/TRV69E/TRV75/TRV75PK/TRV715) |
| R088 | 1-216-864-11 | METAL CHIP | 0 | 5% | 1/16W | (TRV65E/TRV69E/TRV75/TRV75PK/TRV715) |
| R092 | 1-216-809-11 | METAL CHIP | 100 | 5% | 1/16W | |
| R093 | 1-216-833-11 | METAL CHIP | 10K | 5% | 1/16W | |
| R094 | 1-216-814-11 | METAL CHIP | 270 | 5% | 1/16W | (TRV65E/TRV69E) |
| R094 | 1-216-815-11 | METAL CHIP | 330 | 5% | 1/16W | (TRV75/TRV75PK/TRV715) |
| R095 | 1-216-839-11 | METAL CHIP | 33K | 5% | 1/16W | |
| R096 | 1-216-813-11 | METAL CHIP | 220 | 5% | 1/16W | |
| R098 | 1-216-817-11 | METAL CHIP | 470 | 5% | 1/16W | |
| R099 | 1-216-817-11 | METAL CHIP | 470 | 5% | 1/16W | |
| R101 | 1-216-837-11 | METAL CHIP | 22K | 5% | 1/16W | |
| R102 | 1-216-834-11 | METAL CHIP | 12K | 5% | 1/16W | |
| R103 | 1-216-816-11 | METAL CHIP | 390 | 5% | 1/16W | |
| R104 | 1-216-828-11 | METAL CHIP | 3.9K | 5% | 1/16W | (TRV65E/TRV69E/TRV75/TRV75PK/TRV715) |
| R105 | 1-216-814-11 | METAL CHIP | 270 | 5% | 1/16W | (TRV3E/TRV13E/TRV23E/TRV45E/TRV55E) |
| R105 | 1-216-819-11 | METAL CHIP | 680 | 5% | 1/16W | (TRV65E/TRV69E/TRV75/TRV75PK/TRV715) |
| R106 | 1-216-823-11 | METAL CHIP | 1.5K | 5% | 1/16W | |
| R107 | 1-216-833-11 | METAL CHIP | 10K | 5% | 1/16W | |
| R109 | 1-216-829-11 | METAL CHIP | 4.7K | 5% | 1/16W | |
| R110 | 1-216-829-11 | METAL CHIP | 4.7K | 5% | 1/16W | |
| R112 | 1-216-833-11 | METAL CHIP | 10K | 5% | 1/16W | |
| R113 | 1-216-825-11 | METAL CHIP | 2.2K | 5% | 1/16W | |
| R152 | 1-216-822-11 | METAL CHIP | 1.2K | 5% | 1/16W | |
| R154 | 1-216-822-11 | METAL CHIP | 1.2K | 5% | 1/16W | (TRV65E/TRV69E/TRV75/TRV75PK/TRV715) |
| R157 | 1-216-822-11 | METAL CHIP | 1.2K | 5% | 1/16W | (TRV65E/TRV69E/TRV75/TRV75PK/TRV715) |
| R161 | 1-216-804-11 | METAL CHIP | 39 | 5% | 1/16W | (TRV65E/TRV69E/TRV75/TRV75PK/TRV715) |
| R162 | 1-216-803-11 | METAL CHIP | 33 | 5% | 1/16W | (TRV65E/TRV69E/TRV75/TRV75PK/TRV715) |
| R165 | 1-216-803-11 | METAL CHIP | 33 | 5% | 1/16W | (TRV65E/TRV69E/TRV75/TRV75PK/TRV715) |
| R166 | 1-216-804-11 | METAL CHIP | 39 | 5% | 1/16W | (TRV65E/TRV69E/TRV75/TRV75PK/TRV715) |
| R167 | 1-216-803-11 | METAL CHIP | 33 | 5% | 1/16W | |
| R170 | 1-216-804-11 | METAL CHIP | 39 | 5% | 1/16W | |
| R175 | 1-216-836-11 | METAL CHIP | 18K | 5% | 1/16W | (EXCEPT TRV75/TRV75PK/TRV715) |
| R175 | 1-216-837-11 | METAL CHIP | 22K | 5% | 1/16W | (TRV75/TRV75PK/TRV715) |
| R176 | 1-216-837-11 | METAL CHIP | 22K | 5% | 1/16W | (EXCEPT TRV3E/TRV13E/TRV23E) |
| R177 | 1-216-821-11 | METAL CHIP | 1K | 5% | 1/16W | |
| R178 | 1-216-821-11 | METAL CHIP | 1K | 5% | 1/16W | (TRV65E/TRV69E/TRV75/TRV75PK/TRV715) |
| R179 | 1-216-815-11 | METAL CHIP | 330 | 5% | 1/16W | |
| R180 | 1-216-815-11 | METAL CHIP | 330 | 5% | 1/16W | (TRV65E/TRV69E/TRV75/TRV75PK/TRV715) |
| R183 | 1-218-876-11 | RES,CHIP | 16K | 0.50% | 1/16W | |
| R184 | 1-218-847-11 | RES,CHIP | 1K | 0.50% | 1/16W | |
| R202 | 1-216-833-11 | METAL CHIP | 10K | 5% | 1/16W | |
| R203 | 1-216-814-11 | METAL CHIP | 270 | 5% | 1/16W | |
| R205 | 1-216-835-11 | METAL CHIP | 15K | 5% | 1/16W | |
| R206 | 1-216-827-11 | METAL CHIP | 3.3K | 5% | 1/16W | |
| R208 | 1-216-827-11 | METAL CHIP | 3.3K | 5% | 1/16W | |
| R210 | 1-216-809-11 | METAL CHIP | 100 | 5% | 1/16W | |
| R211 | 1-216-830-11 | METAL CHIP | 5.6K | 5% | 1/16W | |
| R212 | 1-216-825-11 | METAL CHIP | 2.2K | 5% | 1/16W | |
| R214 | 1-216-823-11 | METAL CHIP | 1.5K | 5% | 1/16W | |
| R215 | 1-216-822-11 | METAL CHIP | 1.2K | 5% | 1/16W | |
| R216 | 1-216-811-11 | METAL CHIP | 150 | 5% | 1/16W | |
| R217 | 1-216-864-11 | METAL CHIP | 0 | 5% | 1/16W | (TRV3E/TRV13E/TRV23E) |
| R218 | 1-216-826-11 | METAL CHIP | 2.7K | 5% | 1/16W | |
| R219 | 1-216-826-11 | METAL CHIP | 2.7K | 5% | 1/16W | |
| R220 | 1-216-815-11 | METAL CHIP | 330 | 5% | 1/16W | |
| R223 | 1-216-821-11 | METAL CHIP | 1K | 5% | 1/16W | |
| R224 | 1-216-831-11 | METAL CHIP | 6.8K | 5% | 1/16W | |
| R225 | 1-216-826-11 | METAL CHIP | 2.7K | 5% | 1/16W | |
| R226 | 1-216-820-11 | METAL CHIP | 820 | 5% | 1/16W | |
| R227 | 1-216-811-11 | METAL CHIP | 150 | 5% | 1/16W | |
| R228 | 1-216-813-11 | METAL CHIP | 220 | 5% | 1/16W | |
| R229 | 1-216-805-11 | METAL CHIP | 47 | 5% | 1/16W | |
| R230 | 1-216-812-11 | METAL CHIP | 180 | 5% | 1/16W | |
| R231 | 1-216-812-11 | METAL CHIP | 180 | 5% | 1/16W | |
| R232 | 1-216-815-11 | METAL CHIP | 330 | 5% | 1/16W | |
| R233 | 1-216-824-11 | METAL CHIP | 1.8K | 5% | 1/16W | |
| R234 | 1-216-832-11 | METAL CHIP | 8.2K | 5% | 1/16W | |
| R236 | 1-216-825-11 | METAL CHIP | 2.2K | 5% | 1/16W | |
| R237 | 1-216-825-11 | METAL CHIP | 2.2K | 5% | 1/16W | |
| R238 | 1-216-832-11 | METAL CHIP | 8.2K | 5% | 1/16W | |
| R239 | 1-216-827-11 | METAL CHIP | 3.3K | 5% | 1/16W | |
| R240 | 1-216-857-11 | METAL CHIP | 1M | 5% | 1/16W | |
| R241 | 1-216-828-11 | METAL CHIP | 3.9K | 5% | 1/16W | |
| R242 | 1-216-845-11 | METAL CHIP | 100K | 5% | 1/16W | |
| R243 | 1-216-845-11 | METAL CHIP | 100K | 5% | 1/16W | |
| R244 | 1-216-845-11 | METAL CHIP | 100K | 5% | 1/16W | |
| R245 | 1-216-840-11 | METAL CHIP | 39K | 5% | 1/16W | |
| R246 | 1-216-835-11 | METAL CHIP | 15K | 5% | 1/16W | |
| R247 | 1-216-817-11 | METAL CHIP | 470 | 5% | 1/16W | |
| R248 | 1-216-822-11 | METAL CHIP | 1.2K | 5% | 1/16W | |

| Ref. No. | Part No. | Description | | | Remark |
|---|---|---|---|---|---|
| R249 | 1-216-833-11 | METAL CHIP | 10K | 5% | 1/16W |
| R250 | 1-216-295-91 | SHORT | 0 | | |
| | | | (EXCEPT TRV3E/TRV13E/TRV23E) | | |
| R251 | 1-216-833-11 | METAL CHIP | 10K | 5% | 1/16W |
| R252 | 1-216-821-11 | METAL CHIP | 1K | 5% | 1/16W |
| R253 | 1-216-845-11 | METAL CHIP | 100K | 5% | 1/16W |
| R254 | 1-216-864-11 | METAL CHIP | 0 | 5% | 1/16W |
| | | | | (EXCEPT TRV55E) | |
| R255 | 1-216-833-11 | METAL CHIP | 10K | 5% | 1/16W |
| R256 | 1-216-845-11 | METAL CHIP | 100K | 5% | 1/16W |
| R257 | 1-216-295-91 | SHORT | 0 | | |
| R302 | 1-216-817-11 | METAL CHIP | 470 | 5% | 1/16W |
| | | | (EXCEPT TRV3E/TRV13E/TRV23E) | | |
| R303 | 1-216-817-11 | METAL CHIP | 470 | 5% | 1/16W |
| R304 | 1-216-817-11 | METAL CHIP | 470 | 5% | 1/16W |
| R305 | 1-216-817-11 | METAL CHIP | 470 | 5% | 1/16W |
| | | | (EXCEPT TRV3E/TRV13E/TRV23E) | | |
| R308 | 1-216-864-11 | METAL CHIP | 0 | 5% | 1/16W |
| | | | | (TRV3E/TRV13E/TRV23E) | |
| R311 | 1-216-841-11 | METAL CHIP | 47K | 5% | 1/16W |
| R313 | 1-216-864-11 | METAL CHIP | 0 | 5% | 1/16W |
| R314 | 1-216-823-11 | METAL CHIP | 1.5K | 5% | 1/16W |
| R315 | 1-216-823-11 | METAL CHIP | 1.5K | 5% | 1/16W |
| | | | (EXCEPT TRV3E/TRV13E/TRV23E) | | |
| R316 | 1-216-841-11 | METAL CHIP | 47K | 5% | 1/16W |
| | | | (EXCEPT TRV3E/TRV13E/TRV23E) | | |
| R317 | 1-216-845-11 | METAL CHIP | 100K | 5% | 1/16W |
| R318 | 1-216-845-11 | METAL CHIP | 100K | 5% | 1/16W |
| R319 | 1-216-845-11 | METAL CHIP | 100K | 5% | 1/16W |
| | | | (EXCEPT TRV3E/TRV13E/TRV23E) | | |
| R320 | 1-216-849-11 | METAL CHIP | 220K | 5% | 1/16W |
| | | | (EXCEPT TRV3E/TRV13E/TRV23E) | | |
| R321 | 1-216-843-11 | METAL CHIP | 68K | 5% | 1/16W |
| R322 | 1-216-845-11 | METAL CHIP | 100K | 5% | 1/16W |
| | | | | (TRV3E/TRV13E/TRV23E) | |
| R322 | 1-216-849-11 | METAL CHIP | 220K | 5% | 1/16W |
| | | | (EXCEPT TRV3E/TRV13E/TRV23E) | | |
| R323 | 1-216-837-11 | METAL CHIP | 22K | 5% | 1/16W |
| R325 | 1-216-849-11 | METAL CHIP | 220K | 5% | 1/16W |
| | | | | (TRV3E/TRV13E/TRV23E) | |
| R325 | 1-216-851-11 | METAL CHIP | 330K | 5% | 1/16W |
| | | | (EXCEPT TRV3E/TRV13E/TRV23E) | | |
| R328 | 1-162-925-11 | CERAMIC CHIP | 68PF | 5% | 50V |
| R331 | 1-216-820-11 | METAL CHIP | 820 | 5% | 1/16W |
| R343 | 1-216-864-11 | METAL CHIP | 0 | 5% | 1/16W |
| | | | (EXCEPT TRV3E/TRV13E/TRV23E) | | |
| R371 | 1-216-821-11 | METAL CHIP | 1K | 5% | 1/16W |
| R373 | 1-216-809-11 | METAL CHIP | 100 | 5% | 1/16W |
| | | | (EXCEPT TRV3E/TRV13E/TRV23E) | | |
| R374 | 1-216-809-11 | METAL CHIP | 100 | 5% | 1/16W |
| R375 | 1-216-834-11 | METAL CHIP | 12K | 5% | 1/16W |
| R376 | 1-216-834-11 | METAL CHIP | 12K | 5% | 1/16W |
| R377 | 1-216-834-11 | METAL CHIP | 12K | 5% | 1/16W |
| R378 | 1-216-825-11 | METAL CHIP | 2.2K | 5% | 1/16W |
| R379 | 1-216-852-11 | METAL CHIP | 390K | 5% | 1/16W |
| R382 | 1-216-837-11 | METAL CHIP | 22K | 5% | 1/16W |
| R383 | 1-216-837-11 | METAL CHIP | 22K | 5% | 1/16W |
| R384 | 1-216-829-11 | METAL CHIP | 4.7K | 5% | 1/16W |
| R385 | 1-216-826-11 | METAL CHIP | 2.7K | 5% | 1/16W |
| R386 | 1-216-849-11 | METAL CHIP | 220K | 5% | 1/16W |
| R402 | 1-216-821-11 | METAL CHIP | 1K | 5% | 1/16W |

| Ref. No. | Part No. | Description | | | Remark |
|---|---|---|---|---|---|
| R403 | 1-216-845-11 | METAL CHIP | 100K | 5% | 1/16W |
| R404 | 1-216-845-11 | METAL CHIP | 100K | 5% | 1/16W |
| R405 | 1-216-845-11 | METAL CHIP | 100K | 5% | 1/16W |
| R406 | 1-216-845-11 | METAL CHIP | 100K | 5% | 1/16W |
| R407 | 1-216-845-11 | METAL CHIP | 100K | 5% | 1/16W |
| R409 | 1-216-845-11 | METAL CHIP | 100K | 5% | 1/16W |
| R410 | 1-216-829-11 | METAL CHIP | 4.7K | 5% | 1/16W |
| R412 | 1-216-829-11 | METAL CHIP | 4.7K | 5% | 1/16W |
| R414 | 1-216-864-11 | METAL CHIP | 0 | 5% | 1/16W |
| R415 | 1-216-821-11 | METAL CHIP | 1K | 5% | 1/16W |
| R416 | 1-216-821-11 | METAL CHIP | 1K | 5% | 1/16W |
| R417 | 1-216-821-11 | METAL CHIP | 1K | 5% | 1/16W |
| R418 | 1-216-821-11 | METAL CHIP | 1K | 5% | 1/16W |
| R419 | 1-216-839-11 | METAL CHIP | 33K | 5% | 1/16W |
| R420 | 1-216-833-11 | METAL CHIP | 10K | 5% | 1/16W |
| R421 | 1-216-833-11 | METAL CHIP | 10K | 5% | 1/16W |
| R424 | 1-216-841-11 | METAL CHIP | 47K | 5% | 1/16W |
| R425 | 1-216-853-11 | METAL CHIP | 470K | 5% | 1/16W |
| R426 | 1-216-825-11 | METAL CHIP | 2.2K | 5% | 1/16W |
| R427 | 1-216-841-11 | METAL CHIP | 47K | 5% | 1/16W |
| R428 | 1-216-841-11 | METAL CHIP | 47K | 5% | 1/16W |
| R429 | 1-216-811-11 | METAL CHIP | 150 | 5% | 1/16W |
| R430 | 1-216-813-11 | METAL CHIP | 220 | 5% | 1/16W |
| R431 | 1-216-825-11 | METAL CHIP | 2.2K | 5% | 1/16W |
| R432 | 1-216-845-11 | METAL CHIP | 100K | 5% | 1/16W |
| R433 | 1-216-845-11 | METAL CHIP | 100K | 5% | 1/16W |
| R434 | 1-216-853-11 | METAL CHIP | 470K | 5% | 1/16W |
| R435 | 1-216-853-11 | METAL CHIP | 470K | 5% | 1/16W |
| R440 | 1-216-841-11 | METAL CHIP | 47K | 5% | 1/16W |
| R441 | 1-216-845-11 | METAL CHIP | 100K | 5% | 1/16W |
| R452 | 1-217-671-11 | METAL CHIP | 1 | 5% | 1/10W |
| R453 | 1-217-671-11 | METAL CHIP | 1 | 5% | 1/10W |
| R454 | 1-217-671-11 | METAL CHIP | 1 | 5% | 1/10W |
| R455 | 1-216-833-11 | METAL CHIP | 10K | 5% | 1/16W |
| R456 | 1-216-833-11 | METAL CHIP | 10K | 5% | 1/16W |
| R457 | 1-216-833-11 | METAL CHIP | 10K | 5% | 1/16W |
| R458 | 1-216-808-11 | METAL CHIP | 82 | 5% | 1/16W |
| R459 | 1-216-864-11 | METAL CHIP | 0 | 5% | 1/16W |
| R460 | 1-216-864-11 | METAL CHIP | 0 | 5% | 1/16W |
| R461 | 1-216-853-11 | METAL CHIP | 470K | 5% | 1/16W |
| R462 | 1-216-853-11 | METAL CHIP | 470K | 5% | 1/16W |
| R463 | 1-216-853-11 | METAL CHIP | 470K | 5% | 1/16W |
| R464 | 1-216-851-11 | METAL CHIP | 330K | 5% | 1/16W |
| R465 | 1-216-845-11 | METAL CHIP | 100K | 5% | 1/16W |
| R466 | 1-216-841-11 | METAL CHIP | 47K | 5% | 1/16W |
| R467 | 1-216-833-11 | METAL CHIP | 10K | 5% | 1/16W |
| R468 | 1-216-833-11 | METAL CHIP | 10K | 5% | 1/16W |
| R469 | 1-216-841-11 | METAL CHIP | 47K | 5% | 1/16W |
| R470 | 1-216-829-11 | METAL CHIP | 4.7K | 5% | 1/16W |
| R471 | 1-216-833-11 | METAL CHIP | 10K | 5% | 1/16W |
| R472 | 1-216-837-11 | METAL CHIP | 22K | 5% | 1/16W |
| | | | | (EXCEPT TRV75/TRV75PK/TRV715) | |
| R472 | 1-216-833-11 | METAL CHIP | 10K | 5% | 1/16W |
| | | | | (TRV75/TRV75PK/TRV715) | |
| R473 | 1-216-841-11 | METAL CHIP | 47K | 5% | 1/16W |
| R474 | 1-216-817-11 | METAL CHIP | 470 | 5% | 1/16W |
| R475 | 1-216-838-11 | METAL CHIP | 27K | 5% | 1/16W |
| R476 | 1-216-817-11 | METAL CHIP | 470 | 5% | 1/16W |
| R477 | 1-216-864-11 | METAL CHIP | 0 | 5% | 1/16W |

| Ref. No. | Part No. | Description | | | Remark |
|---|---|---|---|---|---|
| R479 | 1-216-864-11 | METAL CHIP | 0 | 5% | 1/16W |
| R480 | 1-216-864-11 | METAL CHIP | 0 | 5% | 1/16W |
| R481 | 1-216-864-11 | METAL CHIP | 0 | 5% | 1/16W |
| R482 | 1-216-830-11 | METAL CHIP | 5.6K | 5% | 1/16W |
| | | | (EXCEPT TRV75/TRV75PK/TRV715) | | |
| R482 | 1-216-833-11 | METAL CHIP | 10K | 5% | 1/16W |
| | | | (TRV75/TRV75PK/TRV715) | | |
| R483 | 1-216-836-11 | METAL CHIP | 18K | 5% | 1/16W |
| R484 | 1-217-671-11 | METAL CHIP | 1 | 5% | 1/10W |
| R485 | 1-217-671-11 | METAL CHIP | 1 | 5% | 1/10W |
| R486 | 1-216-845-11 | METAL CHIP | 100K | 5% | 1/16W |
| R487 | 1-216-827-11 | METAL CHIP | 3.3K | 5% | 1/16W |
| R488 | 1-216-829-11 | METAL CHIP | 4.7K | 5% | 1/16W |
| R490 | 1-216-023-00 | METAL CHIP | 82 | 5% | 1/10W |
| R502 | 1-216-798-11 | RES,CHIP | 12 | 5% | 1/16W |
| R503 | 1-216-798-11 | RES,CHIP | 12 | 5% | 1/16W |
| R504 | 1-216-845-11 | METAL CHIP | 100K | 5% | 1/16W |
| R505 | 1-216-864-11 | METAL CHIP | 0 | 5% | 1/16W |
| R506 | 1-216-857-11 | METAL CHIP | 1M | 5% | 1/16W |
| R508 | 1-216-809-11 | METAL CHIP | 100 | 5% | 1/16W |
| R509 | 1-216-864-11 | METAL CHIP | 0 | 5% | 1/16W |
| R510 | 1-216-809-11 | METAL CHIP | 100 | 5% | 1/16W |
| R511 | 1-216-809-11 | METAL CHIP | 100 | 5% | 1/16W |
| | | | (TRV3E/TRV13E/TRV23E) | | |
| R512 | 1-216-853-11 | METAL CHIP | 470K | 5% | 1/16W |
| R513 | 1-216-825-11 | METAL CHIP | 2.2K | 5% | 1/16W |
| R514 | 1-216-821-11 | METAL CHIP | 1K | 5% | 1/16W |
| R515 | 1-216-864-11 | METAL CHIP | 0 | 5% | 1/16W |
| R522 | 1-216-864-11 | METAL CHIP | 0 | 5% | 1/16W |
| R525 | 1-216-864-11 | METAL CHIP | 0 | 5% | 1/16W |
| R526 | 1-216-864-11 | METAL CHIP | 0 | 5% | 1/16W |
| R527 | 1-216-864-11 | METAL CHIP | 0 | 5% | 1/16W |
| | | | (EXCEPT TRV3E/TRV13E/TRV23E) | | |
| R529 | 1-216-864-11 | METAL CHIP | 0 | 5% | 1/16W |
| R551 | 1-216-841-11 | METAL CHIP | 47K | 5% | 1/16W |
| R554 | 1-216-843-11 | METAL CHIP | 68K | 5% | 1/16W |
| R555 | 1-216-829-11 | METAL CHIP | 4.7K | 5% | 1/16W |
| R556 | 1-216-001-00 | METAL CHIP | 10 | 5% | 1/10W |
| R557 | 1-216-843-11 | METAL CHIP | 68K | 5% | 1/16W |
| R558 | 1-216-295-91 | SHORT | 0 | | |
| R560 | 1-216-821-11 | METAL CHIP | 1K | 5% | 1/16W |
| R561 | 1-216-853-11 | METAL CHIP | 470K | 5% | 1/16W |
| R562 | 1-216-849-11 | METAL CHIP | 220K | 5% | 1/16W |
| R563 | 1-216-853-11 | METAL CHIP | 470K | 5% | 1/16W |
| R564 | 1-216-853-11 | METAL CHIP | 470K | 5% | 1/16W |
| R565 | 1-216-833-11 | METAL CHIP | 10K | 5% | 1/16W |
| R566 | 1-216-835-11 | METAL CHIP | 15K | 5% | 1/16W |
| R567 | 1-216-825-11 | METAL CHIP | 2.2K | 5% | 1/16W |
| R569 | 1-216-825-11 | METAL CHIP | 2.2K | 5% | 1/16W |
| R570 | 1-216-841-11 | METAL CHIP | 47K | 5% | 1/16W |
| R571 | 1-216-837-11 | METAL CHIP | 22K | 5% | 1/16W |
| R572 | 1-216-845-11 | METAL CHIP | 100K | 5% | 1/16W |
| R573 | 1-216-815-11 | METAL CHIP | 330 | 5% | 1/16W |
| R574 | 1-216-821-11 | METAL CHIP | 1K | 5% | 1/16W |
| R575 | 1-216-821-11 | METAL CHIP | 1K | 5% | 1/16W |
| R576 | 1-216-821-11 | METAL CHIP | 1K | 5% | 1/16W |
| R577 | 1-216-833-11 | METAL CHIP | 10K | 5% | 1/16W |
| R579 | 1-216-821-11 | METAL CHIP | 1K | 5% | 1/16W |
| R582 | 1-216-864-11 | METAL CHIP | 0 | 5% | 1/16W |

| Ref. No. | Part No. | Description | | | Remark |
|---|---|---|---|---|---|
| R603 | 1-216-845-11 | METAL CHIP | 100K | 5% | 1/16W |
| R604 | 1-216-813-11 | METAL CHIP | 220 | 5% | 1/16W |
| R605 | 1-216-841-11 | METAL CHIP | 47K | 5% | 1/16W |
| R606 | 1-216-829-11 | METAL CHIP | 4.7K | 5% | 1/16W |
| | | | (TRV75/TRV75PK/TRV715) | | |
| R608 | 1-216-845-11 | METAL CHIP | 100K | 5% | 1/16W |
| R610 | 1-216-821-11 | METAL CHIP | 1K | 5% | 1/16W |
| R611 | 1-216-825-11 | METAL CHIP | 2.2K | 5% | 1/16W |
| | | | (TRV75/TRV75PK/TRV715) | | |
| R612 | 1-216-853-11 | METAL CHIP | 470K | 5% | 1/16W |
| R613 | 1-216-821-11 | METAL CHIP | 1K | 5% | 1/16W |
| R614 | 1-216-821-11 | METAL CHIP | 1K | 5% | 1/16W |
| | | | (TRV75/TRV75PK/TRV715) | | |
| R618 | 1-216-853-11 | METAL CHIP | 470K | 5% | 1/16W |
| R619 | 1-216-853-11 | METAL CHIP | 470K | 5% | 1/16W |
| R620 | 1-216-853-11 | METAL CHIP | 470K | 5% | 1/16W |
| R621 | 1-216-853-11 | METAL CHIP | 470K | 5% | 1/16W |
| R622 | 1-216-853-11 | METAL CHIP | 470K | 5% | 1/16W |
| R624 | 1-216-853-11 | METAL CHIP | 470K | 5% | 1/16W |
| R625 | 1-216-845-11 | METAL CHIP | 100K | 5% | 1/16W |
| R627 | 1-216-853-11 | METAL CHIP | 470K | 5% | 1/16W |
| R628 | 1-216-841-11 | METAL CHIP | 47K | 5% | 1/16W |
| R629 | 1-216-833-11 | METAL CHIP | 10K | 5% | 1/16W |
| R630 | 1-216-826-11 | METAL CHIP | 2.7K | 5% | 1/16W |
| R631 | 1-216-845-11 | METAL CHIP | 100K | 5% | 1/16W |
| R632 | 1-216-857-11 | METAL CHIP | 1M | 5% | 1/16W |
| R633 | 1-216-853-11 | METAL CHIP | 470K | 5% | 1/16W |
| R634 | 1-216-853-11 | METAL CHIP | 470K | 5% | 1/16W |
| R635 | 1-216-857-11 | METAL CHIP | 1M | 5% | 1/16W |
| R636 | 1-216-857-11 | METAL CHIP | 1M | 5% | 1/16W |
| R637 | 1-216-845-11 | METAL CHIP | 100K | 5% | 1/16W |
| R638 | 1-216-845-11 | METAL CHIP | 100K | 5% | 1/16W |
| R639 | 1-216-845-11 | METAL CHIP | 100K | 5% | 1/16W |
| R640 | 1-216-845-11 | METAL CHIP | 100K | 5% | 1/16W |
| R641 | 1-216-845-11 | METAL CHIP | 100K | 5% | 1/16W |
| R642 | 1-216-821-11 | METAL CHIP | 1K | 5% | 1/16W |
| R643 | 1-216-857-11 | METAL CHIP | 1M | 5% | 1/16W |
| R644 | 1-216-841-11 | METAL CHIP | 47K | 5% | 1/16W |
| R645 | 1-216-845-11 | METAL CHIP | 100K | 5% | 1/16W |
| R646 | 1-216-853-11 | METAL CHIP | 470K | 5% | 1/16W |
| R647 | 1-216-853-11 | METAL CHIP | 470K | 5% | 1/16W |
| R648 | 1-216-853-11 | METAL CHIP | 470K | 5% | 1/16W |
| R649 | 1-216-857-11 | METAL CHIP | 1M | 5% | 1/16W |
| R650 | 1-219-570-11 | RES,CHIP | 10M | 5% | 1/16W |
| R651 | 1-216-845-11 | METAL CHIP | 100K | 5% | 1/16W |
| R652 | 1-216-853-11 | METAL CHIP | 470K | 5% | 1/16W |
| R653 | 1-216-853-11 | METAL CHIP | 470K | 5% | 1/16W |
| R654 | 1-216-817-11 | METAL CHIP | 470 | 5% | 1/16W |
| R655 | 1-216-853-11 | METAL CHIP | 470K | 5% | 1/16W |
| R662 | 1-216-841-11 | METAL CHIP | 47K | 5% | 1/16W |
| | | | (EXCEPT TRV3E/TRV13E/TRV23E) | | |
| R663 | 1-216-853-11 | METAL CHIP | 470K | 5% | 1/16W |
| | | | (EXCEPT TRV3E/TRV13E/TRV23E) | | |
| R665 | 1-216-853-11 | METAL CHIP | 470K | 5% | 1/16W |
| | | | (EXCEPT TRV3E/TRV13E/TRV23E) | | |
| R666 | 1-216-821-11 | METAL CHIP | 1K | 5% | 1/16W |
| R667 | 1-216-821-11 | METAL CHIP | 1K | 5% | 1/16W |
| R668 | 1-216-821-11 | METAL CHIP | 1K | 5% | 1/16W |
| R669 | 1-216-821-11 | METAL CHIP | 1K | 5% | 1/16W |

| Ref. No. | Part No. | Description | | | Remark |
|---|---|---|---|---|---|
| R670 | 1-216-821-11 | METAL CHIP | 1K | 5% | 1/16W |
| R671 | 1-216-821-11 | METAL CHIP | 1K | 5% | 1/16W (TRV69E) |
| R672 | 1-216-821-11 | METAL CHIP | 1K | 5% | 1/16W (TRV69E) |
| R673 | 1-216-821-11 | METAL CHIP | 1K | 5% | 1/16W (TRV69E) |
| R675 | 1-216-821-11 | METAL CHIP | 1K | 5% | 1/16W |
| R676 | 1-216-821-11 | METAL CHIP | 1K | 5% | 1/16W |
| R677 | 1-216-821-11 | METAL CHIP | 1K | 5% | 1/16W (TRV69E) |
| R678 | 1-216-821-11 | METAL CHIP | 1K | 5% | 1/16W (TRV69E) |
| R679 | 1-216-821-11 | METAL CHIP | 1K | 5% | 1/16W |
| R680 | 1-216-845-11 | METAL CHIP | 100K | 5% | 1/16W |
| R681 | 1-216-821-11 | METAL CHIP | 1K | 5% | 1/16W (TRV69E) |
| R682 | 1-216-821-11 | METAL CHIP | 1K | 5% | 1/16W |
| R683 | 1-216-821-11 | METAL CHIP | 1K | 5% | 1/16W |
| R684 | 1-216-821-11 | METAL CHIP | 1K | 5% | 1/16W (TRV75/TRV75PK/TRV715) |
| R685 | 1-216-821-11 | METAL CHIP | 1K | 5% | 1/16W |
| R686 | 1-216-821-11 | METAL CHIP | 1K | 5% | 1/16W (TRV75/TRV75PK/TRV715) |
| R687 | 1-216-821-11 | METAL CHIP | 1K | 5% | 1/16W |
| R689 | 1-216-864-11 | METAL CHIP | 0 | 5% | 1/16W (TRV3E/TRV13E/TRV23E) |
| R690 | 1-216-821-11 | METAL CHIP | 1K | 5% | 1/16W |
| R691 | 1-216-845-11 | METAL CHIP | 100K | 5% | 1/16W |
| R692 | 1-216-853-11 | METAL CHIP | 470K | 5% | 1/16W |
| R693 | 1-216-821-11 | METAL CHIP | 1K | 5% | 1/16W |
| R697 | 1-216-854-11 | METAL CHIP | 560K | 5% | 1/16W |
| R701 | 1-216-839-11 | METAL CHIP | 33K | 5% | 1/16W (TRV69E) |
| R702 | 1-216-838-11 | METAL CHIP | 27K | 5% | 1/16W (TRV69E) |
| R703 | 1-216-821-11 | METAL CHIP | 1K | 5% | 1/16W (TRV69E) |
| R704 | 1-216-819-11 | METAL CHIP | 680 | 5% | 1/16W (TRV69E) |
| R705 | 1-216-812-11 | METAL CHIP | 180 | 5% | 1/16W (TRV69E) |
| R706 | 1-216-821-11 | METAL CHIP | 1K | 5% | 1/16W (TRV69E) |
| R707 | 1-216-824-11 | METAL CHIP | 1.8K | 5% | 1/16W (TRV69E) |
| R708 | 1-216-816-11 | METAL CHIP | 390 | 5% | 1/16W (TRV69E) |
| R709 | 1-216-821-11 | METAL CHIP | 1K | 5% | 1/16W (TRV69E) |
| R710 | 1-216-826-11 | METAL CHIP | 2.7K | 5% | 1/16W (TRV69E) |
| R711 | 1-216-820-11 | METAL CHIP | 820 | 5% | 1/16W (TRV69E) |
| R712 | 1-216-826-11 | METAL CHIP | 2.7K | 5% | 1/16W (TRV69E) |
| R713 | 1-216-825-11 | METAL CHIP | 2.2K | 5% | 1/16W (TRV69E) |
| R714 | 1-216-833-11 | METAL CHIP | 10K | 5% | 1/16W (TRV69E) |
| R715 | 1-216-829-11 | METAL CHIP | 4.7K | 5% | 1/16W (TRV69E) |
| R716 | 1-216-819-11 | METAL CHIP | 680 | 5% | 1/16W (TRV69E) |
| R717 | 1-216-821-11 | METAL CHIP | 1K | 5% | 1/16W (TRV69E) |
| R718 | 1-216-816-11 | METAL CHIP | 390 | 5% | 1/16W (TRV69E) |
| R719 | 1-216-817-11 | METAL CHIP | 470 | 5% | 1/16W (TRV69E) |
| R720 | 1-216-821-11 | METAL CHIP | 1K | 5% | 1/16W (TRV69E) |
| R721 | 1-216-821-11 | METAL CHIP | 1K | 5% | 1/16W (TRV69E) |
| R722 | 1-216-821-11 | METAL CHIP | 1K | 5% | 1/16W (TRV69E) |
| R723 | 1-216-830-11 | METAL CHIP | 5.6K | 5% | 1/16W (TRV69E) |
| R724 | 1-216-864-11 | SHORT | 0 | | 1/16W (TRV69E) |
| R725 | 1-216-821-11 | METAL CHIP | 1K | 5% | 1/16W (TRV69E) |
| R726 | 1-216-864-11 | METAL CHIP | 0 | 5% | 1/16W (EXCEPT TRV69E) |
| R752 | 1-216-841-11 | METAL CHIP | 47K | 5% | 1/16W (TRV75/TRV75PK/TRV715) |
| R753 | 1-216-841-11 | METAL CHIP | 47K | 5% | 1/16W (TRV75/TRV75PK/TRV715) |
| R755 | 1-216-837-11 | METAL CHIP | 22K | 5% | 1/16W (TRV75/TRV75PK/TRV715) |
| R756 | 1-216-829-11 | METAL CHIP | 4.7K | 5% | 1/16W (TRV75/TRV75PK/TRV715) |
| R757 | 1-216-829-11 | METAL CHIP | 4.7K | 5% | 1/16W (TRV75/TRV75PK/TRV715) |
| R758 | 1-216-833-11 | METAL CHIP | 10K | 5% | 1/16W (TRV75/TRV75PK/TRV715) |
| R759 | 1-216-833-11 | METAL CHIP | 10K | 5% | 1/16W (TRV75/TRV75PK/TRV715) |
| R760 | 1-216-835-11 | METAL CHIP | 15K | 5% | 1/16W (TRV75/TRV75PK/TRV715) |
| R761 | 1-216-857-11 | METAL CHIP | 1M | 5% | 1/16W (TRV75/TRV75PK/TRV715) |
| R763 | 1-218-879-11 | RES,CHIP | 22K | 0.50% | 1/16W (TRV75/TRV75PK/TRV715) |
| R764 | 1-216-815-11 | METAL CHIP | 330 | 5% | 1/16W (TRV75/TRV75PK/TRV715) |
| R765 | 1-216-821-11 | METAL CHIP | 1K | 5% | 1/16W (TRV75/TRV75PK/TRV715) |
| R767 | 1-216-817-11 | METAL CHIP | 470 | 5% | 1/16W (TRV75/TRV75PK/TRV715) |
| R768 | 1-216-847-11 | METAL CHIP | 150K | 5% | 1/16W (TRV75/TRV75PK/TRV715) |
| R770 | 1-216-847-11 | METAL CHIP | 150K | 5% | 1/16W (TRV75/TRV75PK/TRV715) |
| R771 | 1-216-818-11 | METAL CHIP | 560 | 5% | 1/16W (TRV75/TRV75PK/TRV715) |
| R772 | 1-216-831-11 | METAL CHIP | 6.8K | 5% | 1/16W (TRV75/TRV75PK/TRV715) |
| R773 | 1-216-817-11 | METAL CHIP | 470 | 5% | 1/16W (TRV75/TRV75PK/TRV715) |
| R774 | 1-216-840-11 | METAL CHIP | 39K | 5% | 1/16W (TRV75/TRV75PK/TRV715) |
| R775 | 1-216-864-11 | METAL CHIP | 0 | 5% | 1/16W (EXCEPT TRV75/TRV75PK/TRV715) |
| R917 | 1-216-837-11 | METAL CHIP | 22K | 5% | 1/16W (EXCEPT TRV45E/TRV55E) |
| R917 | 1-216-842-11 | METAL CHIP | 56K | 5% | 1/16W (TRV45E/TRV55E) |
| R918 | 1-216-843-11 | METAL CHIP | 68K | 5% | 1/16W (TRV45E/TRV55E) |
| R918 | 1-216-845-11 | METAL CHIP | 100K | 5% | 1/16W (EXCEPT TRV45E/TRV55E) |
| R919 | 1-216-833-11 | METAL CHIP | 10K | 5% | 1/16W (TRV75/TRV75PK/TRV715) |

| Ref. No. | Part No. | Description | | | Remark |
|---|---|---|---|---|---|
| R919 | 1-216-841-11 | METAL CHIP | 47K | 5% | 1/16W (TRV55E) |
| R919 | 1-216-843-11 | METAL CHIP | 68K | 5% | 1/16W (TRV65E) |
| R919 | 1-216-842-11 | METAL CHIP | 56K | 5% | 1/16W (TRV45E) |
| R919 | 1-216-845-11 | METAL CHIP | 100K | 5% | 1/16W (TRV3E/TRV13E/TRV23E/TRV69E) |
| R920 | 1-216-833-11 | METAL CHIP | 10K | 5% | 1/16W (TRV69E) |
| R920 | 1-216-837-11 | METAL CHIP | 22K | 5% | 1/16W (TRV3E/TRV13E/TRV23E) |
| R920 | 1-216-842-11 | METAL CHIP | 56K | 5% | 1/16W (TRV65E) |
| R920 | 1-216-843-11 | METAL CHIP | 68K | 5% | 1/16W (TRV45E) |
| R920 | 1-216-845-11 | METAL CHIP | 100K | 5% | 1/16W (TRV55E/TRV75/TRV75PK/TRV715) |
| R921 | 1-216-845-11 | METAL CHIP | 100K | 5% | 1/16W |
| R922 | 1-217-671-11 | METAL CHIP | 1 | 5% | 1/10W |
| R923 | 1-217-671-11 | METAL CHIP | 1 | 5% | 1/10W |
| R924 | 1-216-821-11 | METAL CHIP | 1K | 5% | 1/16W |
| R925 | 1-216-821-11 | METAL CHIP | 1K | 5% | 1/16W |
| R926 | 1-216-864-11 | METAL CHIP | 0 | 5% | 1/16W (EXCEPT TRV3E/TRV13E/TRV23E) |
| R928 | 1-216-821-11 | METAL CHIP | 1K | 5% | 1/16W |
| R929 | 1-216-864-11 | METAL CHIP | 0 | 5% | 1/16W |
| | | < THERMISTOR > | | | |
| TH401 | 1-809-360-21 | THERMISTOR, NTC (2125) (TRV69E) | | | |
| | | < VIBRATOR > | | | |
| X151 | 1-767-029-21 | VIBRATOR, CRYSTAL (14.318MHz) (EXCEPT TRV3E/TRV13E/TRV23E) | | | |
| X401 | 1-760-655-41 | VIBRATOR, CRYSTAL (20MHz) | | | |
| X501 | 1-760-320-11 | VIBRATOR, CRYSTAL (28.6363MHz) (TRV75/TRV75PK/TRV715) | | | |
| X501 | 1-760-321-11 | VIBRATOR, CRYSTAL (28.375MHz) (EXCEPT TRV75/TRV75PK/TRV715) | | | |
| X601 | 1-579-907-21 | VIBRATOR, CERAMIC (20MHz) | | | |
| X602 | 1-760-458-21 | VIBRATOR, CRYSTAL (32.798kHz) | | | |

| | | | | | |
|---|---|---|---|---|---|
| | A-7066-774-A | VF-99(HP) BOARD, COMPLETE (EXCEPT TRV75/TRV75PK/TRV715) | | | |
| | | ********** | | | |
| | A-7066-792-A | VF-99(VHL4) BOARD, COMPLETE (TRV75/TRV75PK/TRV715) | | | |
| | | ********** | | | |
| | | (Ref. No. 10000 series) | | | |
| | | < CAPACITOR > | | | |
| C901 | 1-107-854-11 | TANTAL. CHIP | 68uF | 20% | 6.3V |
| C902 | 1-163-038-91 | CERAMIC CHIP | 0.1uF | | 25V |
| C903 | 1-135-145-11 | TANTALUM CHIP | 0.47uF | 10% | 35V |
| C904 | 1-162-965-11 | CERAMIC CHIP | 0.0015uF | 10% | 50V |
| C905 | 1-104-752-11 | TANTAL. CHIP | 33uF | 20% | 6.3V |
| C906 | 1-162-638-11 | CERAMIC CHIP | 1uF | | 16V |
| C907 | 1-104-563-11 | FILM CHIP | 0.1uF | 5% | 16V |
| C908 | 1-162-920-11 | CERAMIC CHIP | 27PF | 5% | 50V |

| Ref. No. | Part No. | Description | | | Remark |
|---|---|---|---|---|---|
| C909 | 1-163-009-11 | CERAMIC CHIP | 0.001uF | 10% | 50V |
| ⚠C910 | 1-164-758-11 | CERAMIC CHIP | 0.0039uF | 5% | 50V |
| ⚠C911 | 1-164-715-11 | CERAMIC CHIP | 0.0068uF | 5% | 50V |
| C912 | 1-107-854-11 | TANTAL. CHIP | 68uF | 20% | 6.3V |
| C913 | 1-135-145-11 | TANTALUM CHIP | 0.47uF | 10% | 35V |
| C914 | 1-113-984-11 | TANTAL. CHIP | 1.5uF | 20% | 35V |
| C915 | 1-163-037-11 | CERAMIC CHIP | 0.022uF | 10% | 25V |
| C916 | 1-164-611-11 | CERAMIC CHIP | 0.001uF | 10% | 500V |
| | | < CONNECTOR > | | | |
| CN901 | 1-573-506-41 | CONNECTOR, FPC (NON ZIF) 4P | | | |
| CN902 | 1-580-057-11 | PIN, CONNECTOR 4P | | | |
| | | < DIODE > | | | |
| D901 | 8-719-951-21 | DIODE PR1102W-TR | | | |
| D903 | 8-719-404-49 | DIODE MA111-TX | | | |
| | | < IC > | | | |
| IC901 | 8-759-196-14 | IC BA7149F-E2 | | | |
| | | < COIL > | | | |
| L901 | 1-412-031-11 | INDUCTOR CHIP 47uH | | | |
| L902 | 1-410-387-11 | INDUCTOR CHIP 33uH | | | |
| ⚠L903 | 1-411-697-11 | COIL, FERRITE (HLC) | | | |
| | | < TRANSISTOR > | | | |
| Q901 | 8-729-230-63 | TRANSISTOR 2SD1819A-QRS-TX | | | |
| Q902 | 8-729-106-68 | TRANSISTOR 2SD1615-T1GLGK | | | |
| Q903 | 8-729-216-31 | TRANSISTOR 2SA1163G-TE85L | | | |
| Q904 | 8-729-230-63 | TRANSISTOR 2SD1819A-QRS-TX | | | |
| | | < RESISTOR > | | | |
| R901 | 1-216-817-11 | METAL CHIP | 470 | 5% | 1/16W |
| R902 | 1-216-817-11 | METAL CHIP | 470 | 5% | 1/16W |
| R903 | 1-216-057-00 | METAL CHIP | 2.2K | 5% | 1/10W |
| R904 | 1-216-833-11 | METAL CHIP | 10K | 5% | 1/16W |
| R905 | 1-216-822-11 | METAL CHIP | 1.2K | 5% | 1/16W |
| R906 | 1-216-813-11 | METAL CHIP | 220 | 5% | 1/16W |
| R907 | 1-216-845-11 | METAL CHIP | 100K | 5% | 1/16W |
| R908 | 1-216-852-11 | METAL CHIP | 390K | 5% | 1/16W |
| R909 | 1-216-833-11 | METAL CHIP | 10K | 5% | 1/16W |
| R910 | 1-216-835-11 | METAL CHIP | 15K | 5% | 1/16W |
| R911 | 1-216-160-00 | RES,CHIP | 27 | 5% | 1/8W |
| R912 | 1-216-857-11 | METAL CHIP | 1M | 5% | 1/16W |
| R913 | 1-216-820-11 | METAL CHIP | 820 | 5% | 1/16W |
| R914 | 1-216-813-11 | METAL CHIP | 220 | 5% | 1/16W |
| R915 | 1-216-793-11 | RES,CHIP | 4.7 | 5% | 1/16W |
| R916 | 1-218-879-11 | RES,CHIP | 22K | 0.50% | 1/16W (TRV75/TRV75PK/TRV715) |
| R916 | 1-218-881-11 | RES,CHIP | 27K | 0.50% | 1/16W (EXCEPT TRV75/TRV75PK/TRV715) |
| R917 | 1-218-891-11 | RES,CHIP | 68K | 0.50% | 1/16W (TRV75/TRV75PK/TRV715) |
| R917 | 1-218-893-11 | RES,CHIP | 82K | 0.50% | 1/16W (EXCEPT TRV75/TRV75PK/TRV715) |
| R918 | 1-216-829-11 | METAL CHIP | 4.7K | 5% | 1/16W |

| | |
|---|---|
| The components identified by mark ⚠ or dotted line with mark ⚠ are critical for safety.<br>Replace only with part number specified. | Les composants identifiés par une marque ⚠ sont critiques pour la sécurité.<br>Ne les remplacer que par une piéce portant le numéro spécifié. |

| Ref. No. | Part No. | Description | Remark |
|---|---|---|---|
| R919 | 1-216-843-11 | METAL CHIP 68K 5% 1/16W | (EXCEPT TRV75/TRV75PK/TRV715) |
| R920 | 1-216-837-11 | METAL CHIP 22K 5% 1/16W | |
| R921 | 1-216-795-11 | RES,CHIP 6.8 5% 1/16W | |
| R922 | 1-216-847-11 | METAL CHIP 150K 5% 1/16W | |
| R923 | 1-216-857-11 | METAL CHIP 1M 5% 1/16W | |
| R924 | 1-216-862-11 | RES,CHIP 2.7M 5% 1/16W | |
| R925 | 1-216-862-11 | RES,CHIP 2.7M 5% 1/16W | |
| R926 | 1-216-821-11 | METAL CHIP 1K 5% 1/16W | |
| R927 | 1-216-821-11 | METAL CHIP 1K 5% 1/16W | |
| R928 | 1-216-827-11 | METAL CHIP 3.3K 5% 1/16W | |
| R929 | 1-216-818-11 | METAL CHIP 560 5% 1/16W | |
| | | < VARIABLE RESISTOR > | |
| RV903 | 1-238-852-11 | RES, ADJ, CERMET 470 | |
| RV904 | 1-223-566-11 | RES, ADJ, METAL GLAZE 1M | |
| | | < TRANSFORMER > | |
| ⚠T901 | 1-453-124-11 | TRANSFORMER ASSY, FLYBACK | |
| | | < THERMISTOR > | |
| TH901 | 1-809-350-21 | THERMISTOR, NTC (2125) | |
| | | < FLEXIBLE BOARD > | |
| ⚠W901 | 1-540-019-21 | SOCKET ASSY, CRT | |

MISCELLANEOUS
**********

| | | | |
|---|---|---|---|
| 10 | 1-475-619-21 | SWITCH BLOCK, CONTROL (SS-8500) (TRV55E) | |
| 10 | 1-475-619-11 | SWITCH BLOCK, CONTROL (SS-8500) | (EXCEPT TRV55E) |
| 14 | 1-475-617-11 | SWITCH BLOCK, CONTROL (FK-8500) | (TRV3ETRV13E) |
| 14 | 1-475-617-31 | SWITCH BLOCK, CONTROL (FK-8500) | (TRV23E/TRV65E/TRV69E) |
| 14 | 1-475-618-21 | SWITCH BLOCK, CONTROL (FK-8500) | (TRV45E/TRV55E) |
| 14 | 1-475-618-41 | SWITCH BLOCK, CONTROL (FK-8500) | (TRV75/TRV75PK/TRV715) |
| 104 | 1-475-621-11 | SWITCH BLOCK, CONTROL (MR-8500) | (TRV45E/TRV55E/TRV75/TRV75PK/TRV715) |
| 114 | 1-783-240-11 | CABLE, FLEXIBLE FLAT (FFC-236) | |
| 154 | 1-475-620-11 | SWITCH BLOCK,CONTROL (MF-8500) | (TRV3E/TRV13E/TRV23E/TRV65E/TRV69E) |
| 164 | 1-783-240-11 | CABLE, FLEXIBLE FLAT (FFC-236) | |
| 208 | 1-668-963-41 | FP-642FLEXBLE BOARD | |
| 209 | 1-958-332-11 | HARNESS (DP-71) | (TRV45E/TRV55E/TRV75/TRV75PK/TRV715) |
| 258 | 1-668-963-11 | FP-642 FLEXIBLE BOARD | |
| 259 | 1-958-379-11 | HARNESS (DP-70) | (TRV3E/TRV13E/TRV23E/TRV65E/TRV69E) |
| 308 | 1-783-241-11 | CABLE,FLEXIBLE FLAT (FFC-235) | |
| 352 | 1-668-957-11 | FP-621 FLEXBLBOARD | |
| 357 | 1-668-956-11 | FP-620 FLEXIBLE BOARD | |
| 358 | 1-668-960-11 | FP-629 FLEXIBLE BOARD | |
| 363 | 1-774-867-31 | CONNECTOR,EXTERNAL(HOT SHOE)8P | (EXCEPT TRV3E/TRV13E/TRV23E) |
| 364 | 1-668-978-11 | FP-633 FLEXIBLE BOARD | (EXCEPT TRV3E/TRV13E/TRV23E) |
| 367 | 1-668-958-11 | FP-622 FLEXIBLE BOARD | |
| 408 | 1-694-384-11 | TERMINAL BOARD, BATTERYE | |
| 410 | 1-668-959-11 | FP-623 FLEXBLE BOARD | |
| 414 | 1-758-084-21 | FILTER BLOCK, OPTICAL | (EXCEPT TRV3E/TRV13E/TRV23E) |
| 414 | 1-758-133-21 | FILTER BLOCK, OPTICAL | (TRV3E/TRV13E/TRV23E) |
| 451 | 8-848-722-01 | DEVICE, LENS LSV-600A(SOC) | (EXCEPT TRV3E/TRV13E) |
| 451 | 8-848-724-01 | DEVICE, LENS LSV-601A(SOC) | (TRV3E/TRV13E) |
| 760 | 1-658-213-11 | FP-355 FLEXIBLE BOARD | |
| 762 | 1-657-786-13 | FP-221 FLEXIBLE BOARD | |
| 764 | 1-658-214-11 | FP-356 FLEXIBLE BOARD | |
| 803 | 1-657-785-11 | FP-248 FLEXIBLE BOARD | |
| 817 | 1-657-784-11 | FP-220 FLEXIBLE BOARD | |
| D001 | 8-719-988-42 | DIODE GL453 | |
| IC401 | A-7030-865-A | CCD BLOCK ASSY | (209 SERVICE) (CCD IMAGER) (TRV75/TRV75PK/TRV715) |
| IC401 | A-7030-871-A | CCD BLOCK ASSY | (211 SERVICE) (CCD IMAGER) (TRV45E/TRV55E/TRV65E/TRV69E) |
| IC401 | A-7030-874-A | CCD BLOCK ASSY | (207 SERVICE) (CCD IMAGER) (TRV3E/TRV13E/TRV23E) |
| J001 | 1-565-276-31 | JACK, ULTRA SMALL 1P (LANC) | |
| LCD901 | 1-803-038-11 | INDICATOR MODULE, LIQUID CRYST | (TRV55E:E1,HK,CN) |
| LCD901 | 1-803-038-21 | INDICATOR MODULE, LIQUID CRYST | (TRV45E/TRV55E:EE2,JE) |
| LCD901 | 1-803-037-21 | INDICATOR MODULE, LIQUID CRYST | (TRV75/TRV75PK/TRV715) |
| LCD901 | 1-803-035-21 | INDICATOR MODULE, LIQUID CRYST (TRV23E) | |
| LCD901 | 1-803-036-21 | INDICATOR MODULE, LIQUID CRYST | (TRV65E/TRV69E) |
| LCD901 | 1-803-040-21 | INDICATOR MODULE, LIQUID CRYST | (TRV3E/TRV13E) |
| M901 | A-7048-851-A | DRUM ASSY (DGH-0D5A-R)(PAL) | (EXCEPT TRV75/TRV75PK/TRV715) |
| M901 | A-7048-842-A | DRUM ASSY (DGH-0E1A-R)(NTSC)(5HEAD) | (TRV75/TRV75PK/TRV715) |
| M902 | 8-835-531-32 | CAPSTAN ASSY | |
| M903 | X-3945-401-1 | MOTOR ASSY, DC (LOADING) | |
| M905 | 1-763-047-11 | MOTOR, FOCUS STEPPING | |
| M906 | 1-763-046-11 | MOTOR, ZOOM STEPPING | |
| MIC901 | 1-542-312-11 | MICROPHONE (L-CH) | |
| MIC902 | 1-542-312-11 | MICROPHONE (R-CH) | (EXCEPT TRV3E/TRV13E/TRV23E) |
| ⚠ND801 | 1-517-753-11 | TUBE, FLUORESCENT,COLD CATHODE | (TRV75/TRV75PK/TRV715) |
| ⚠ND801 | 1-517-754-11 | TUBE, FLUORESCENT,COLD CATHODE | (TRV45E/TRV55E) |
| ⚠ND801 | 1-517-751-11 | TUBE, FLUORESCENT,COLD CATHODE | (TRV3E/TRV13E) |
| ⚠ND801 | 1-517-752-11 | TUBE, FLUORESCENT,COLD CATHODE (TRV23E) | |
| ⚠ND801 | 1-517-752-21 | TUBE, FLUORESCENT,COLD CATHODE | (TRV65E/TRV69E) |
| ⚠ND802 | 1-517-759-11 | LIGHT, BACK | |
| S001 | 1-692-614-11 | SWITCH, PUSH (3 KEY) | (Hi8 MP, ME/MP, REC PROOF) |
| S002 | 1-572-688-11 | SWITCH, PUSH (1 KEY)(C.C. LOCK) | |
| S003 | 1-572-688-11 | SWITCH, PUSH (1 KEY) (EJECT) | |

| | |
|---|---|
| The components identified by mark ⚠ or dotted line with mark ⚠ are critical for safety.<br>Replace only with part number specified. | Les composants identifiés par une marque ⚠ sont critiques pour la sécurité.<br>Ne les remplacer que par une piéce portant le numéro spécifié. |

| Ref. No. | Part No. | Description | Remark |
|---|---|---|---|
| S901 | 1-762-436-15 | SWITCH, ROTARY (ENCODER) | |
| SE451 | 1-803-041-31 | SENSOR, ANGULAR VELOCITY (YAW) | (EXCEPT TRV3E/TRV13E/TRV23E) |
| SE452 | 1-803-041-41 | SENSOR, ANGULAR VELOCITY (PITCH) | (EXCEPT TRV3E/TRV13E/TRV23E) |
| SP901 | 1-504-753-41 | SPEAKER (2.8CM) | (TRV45E/TRV55E/TRV75/TRV75PK/TRV715) |
| SP901 | 1-505-291-11 | SPEAKER (DIA 2.8CM) | (TRV3E/TRV13E/TRV23E/TRV65E/TRV69E) |
| ⚠V901 | 1-452-673-31 | CRT ASSY (M01KXX90WB) | |
| | | ACCESSORIES MATERIALS | |
| | | ********** | |
| | 1-467-574-21 | REMOTE, COMMANDER (RMT-708) | (EXCEPT TRV69E) |
| ⚠ | 1-475-599-11 | ADAPTOR, AC (AC-L10) | |
| ⚠ | 1-569-008-11 | ADAPTOR, CONVERSION 2P | (TRV3:E,HK/TRV23E:E,HK/TRV45E:E,HK/TRV55:E,HK/TRV75:E/TRV75PK) |
| ⚠ | 1-573-856-11 | ADAPTOR, CONVERSION 2P | (TRV3E:JE/TRV55E:JE/TRV75E:JE) |
| | 1-574-039-21 | CORD, CONNECTION | (A/V connecting cable (Monaural), 1.5m) (TRV3E/TRV13E/TRV23E) |
| ⚠ | 1-575-131-11 | CORD, POWER | (TRV3E:E/TRV13E:AEP,EE,NE,RU/TRV23E:E/TRV45E:E/TRV55E:E1/ TRV65E:AEP,EE,NE,RU/TRV69E/TRV75:E/TRV75PK) |
| | 1-575-334-11 | CORD, CONNECTION | (A/V connecting cable (Stereo), 1.5m) (EXCEPT TRV3E/TRV13E/TRV23E) |
| ⚠ | 1-696-819-11 | CORD, POWER (TRV23E:AUS) | |
| ⚠ | 1-696-819-21 | CORD, POWER (TRV3E:AUS/TRV45E:AUS) | |
| | 1-764-622-11 | ADAPTOR, CONVERSION 21 Pin adaptor (VMC-89) | (TRV13E) |
| | 1-770-783-11 | CONNECTOR,CONVERSION 21Pinadaptor | (VMC-91)(TRV65E/TRV69E) |
| ⚠ | 1-769-322-11 | CORD, POWER 2P (TRV55E:JE) | |
| ⚠ | 1-775-549-21 | CORD, POWER (TRV75:US,CND/TRV715) | |
| ⚠ | 1-782-476-11 | CORD, POWER (TRV3E:CN/TRV55E:CN) | |
| ⚠ | 1-783-374-11 | CORD, POWER (TRV3E:HK/TRV13E:UK/ TRV23E:HK/TRV45E:HK/TRV55E:HK/TRV65E:UK) | |
| | 3-861-891-11 | MANUAL (3), INSTRUCTION (ENGLISH) | (TRV75:US,CND/TRV715) |
| | 3-861-891-21 | MANUAL(3),INSTRUCTION(FRENCH) | (TRV75:CND/TRV715:CND) |
| | 3-861-891-31 | MANUAL (3), INSTRUCTION (ENGLISH) | (TRV75:E/TRV75PK) |
| | 3-861-891-41 | MANUAL(3),INSTRUCTION | (SPANISH,PORTUGUESE)(TRV75:E/TRV75PK) |
| | 3-861-891-51 | MANUAL (3), INSTRUCTION (CHINESE) | (TRV75:E/TRV75PK) |
| | 3-861-891-61 | MANUAL (3), INSTRUCTION (KOREAN) | (TRV75:JE) |
| | 3-861-892-11 | MANUAL(3),INSTRUCTION | (ENGLISH,RUSSIAN)(TRV45E/TRV55E) |
| | 3-861-892-21 | MANUAL(3),INSTRUCTION | (FRENCH,GERMAN)(TRV45E:E,HK/TRV55E) |
| | 3-861-892-31 | MANUAL(3),INSTRUCTION | (ARABIC,PERSIAN)(TRV45E:E/TRV55E:E,CN) |
| | 3-861-892-41 | MANUAL (3), INSTRUCTION (CHINESE) | (TRV45E:E,CN/TRV55E:HK) |
| | 3-861-892-51 | MANUAL (3), INSTRUCTION (CHINESE) | (TRV45E:E/TRV55E:E,CN,JE) |
| | 3-861-902-11 | MANUAL,INSTRUCTION (ENGLISH,RUSSIAN) | (TRV13E:EE,NE,RU,UK/TRV65E:EE,NE.RU,UK/TRV69E) |
| | 3-861-902-21 | MANUAL, INSTRUCTION (SPANISH,PORTUGUESE) | (TRV13E:AEP1/TRV65E:AEP1/TRV69E) |
| | 3-861-902-31 | MANUAL, INSTRUCTION (GERMAN,ITALIAN) | (TRV13E:AEP/TRV65E:AEP/TRV69E) |
| | 3-861-902-41 | MANUAL, INSTRUCTION (FRENCH,DUTCH) | (TRV13E:AEP2/TRV65E:AEP2/TRV69E) |
| | 3-861-902-51 | MANUAL,INSTRUCTION (SWEDISH,POLISH) | (TRV13E:EE/TRV65E:EE) |
| | 3-861-903-11 | MANUAL, INSTRUCTION (ENGLISH,RUSSIAN) | (TRV3E/TRV23E) |
| | 3-861-903-21 | MANUAL, INSTRUCTION (FRENCH,GERMAN) | (TRV3E:E,HK,CN/TRV23E:E,HK) |
| | 3-861-903-31 | MANUAL, INSTRUCTION (ARABIC,PERSIAN) | (TRV3E:E,CN/TRV23E:E) |
| | 3-861-903-41 | MANUAL, INSTRUCTION (CHINESE) | (TRV3E:HK/TRV23E:HK) |
| | 3-861-903-51 | MANUAL, INSTRUCTION(CHINESE) | (TRV3E:E,CN/TRV23E:E) |
| | 3-971-463-01 | LABEL, FIRE CAUTION DISCERN (TRV75:US) | |
| | 3-947-969-21 | BELT (S), SHOULDER | |
| * | 3-988-960-01 | BAG, CARRY (TRV75PK) | |
| | 8-917-593-90 | REMOTE COMMANDER (RMT-717) (TRV69E) | |
| | A-7092-699-A | CASE (L) ASSY, BATTERY (TRV75:CND) | |
| | A-7092-936-A | CASE (L) ASSY (U), BATTERY (TRV75:US) | |
| ** | NP-F330 | BATTERY PACK | |

Note.

** MARKPARTSIS AVAILABLE AS AN OPTIONAL ACCESSORY.

| | |
|---|---|
| The components identified by mark ⚠ or dotted line with mark ⚠ are critical for safety. Replace only with part number specified. | Les composants identifiés par une marque ⚠ sont critiques pour la sécurité. Ne les remplacer que par une piéce portant le numéro spécifié. |

**< PARTS REFERENCE SHEET >**

You can find the parts position of mount locations applying to boards of a set.

Take a copy CAMERA COLOR REPRODUCTION FRAME and Parts reference sheets with a clear sheet for use.

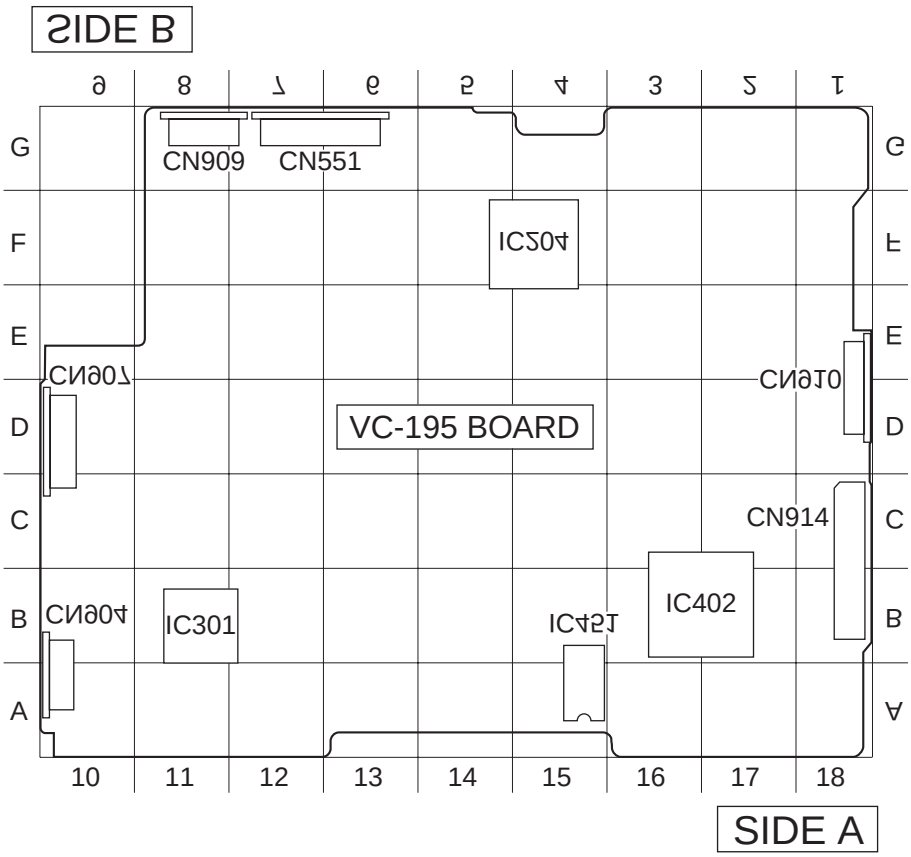

**FOR CAMERA COLOR REPRODUCTION ADJUSTMENT**

Take a copy CAMERA COLOR REPRODUCTION FRAME and Parts reference sheets with a clear sheet for use.

**For NTSC 760H model**

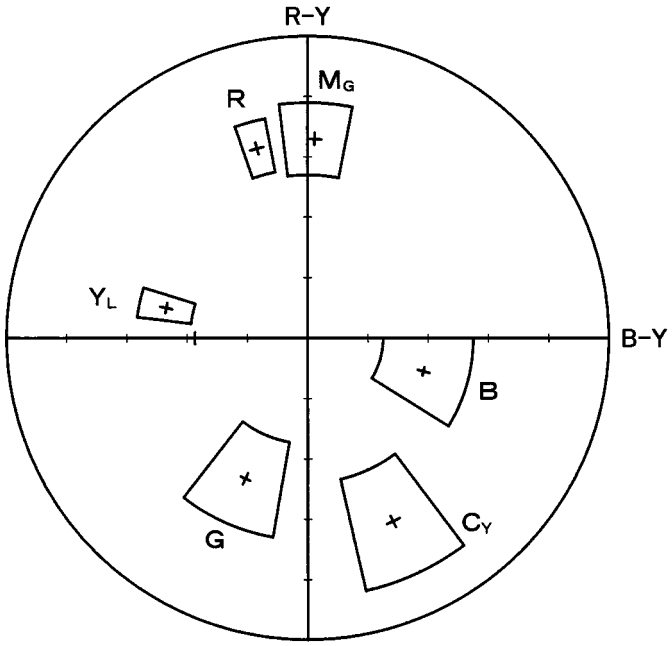


CCD-TRV75/TRV75PK/TRV715

**For PAL 510H, 760H model**

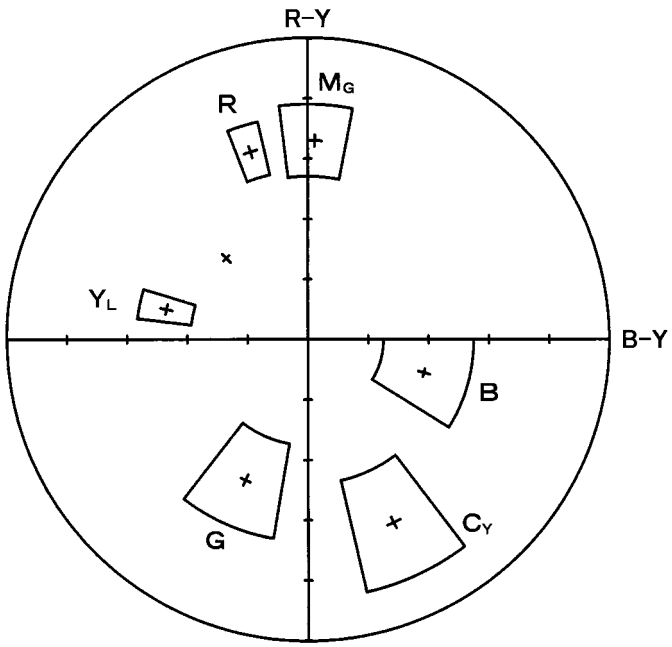


CCD-TRV3E/TRV13E/TRV23E/TRV45E/
TRV55E/TRV65E/TRV69E

**CCD-TRV3E/TRV13E/TRV23E/TRV45E/TRV55E/TRV65E/**
**TRV69E/TRV75/TRV75PK/TRV715**

**9-974-038-11**

**Sony Corporation**
**Personal A&V Products Company**



98B0997-1
Printed in Japan © 1998. 2
**Published by Quality Engineering Dept.**
**(Osaki East)**